INTERNATIONAL COUNCIL FOR BUILDING RESEARCH STUDIES AND DOCUMENTATION

WORKING COMMISSION W18 - TIMBER STRUCTURES

INTERNATIONAL UNION OF FOREST RESEARCH ORGANISATIONS

GROUP S 5.02 - TIMBER ENGINEERING

# CIB - W18

# IUFRO S 5.02

## Volume I

MEETING NINETEEN

FLORENCE

ITALY

SEPTEMBER 1986

CONTENTS VOLUME I


1 List of Participants
2 Chairman's Introduction
3 Cooperation with other Organisations
4 CIB-W18B: Tropical Timbers
5 Trussed Rafter Sub-Group
6 Sampling Sub-Group
7 Reports on Current Research
8 Duration of Load and Creep
9 Eurocode
10 Questions Related to Strength Distributions
11 Joints
12 Trussed Rafters
13 Stability
14 Seismic Design
15 Address by Mr. Marchi
16 Material Strength
17 Design with Wood-Based Panels
18 Future IUFRO S 5.02 Meeting
19 Future CIB-W18A Meeting
20 Testing of Truss Plates
21 Trussed Rafter Sub-Group
22 Sampling Sub-Group
23 Column Interaction
24 Other Business
25 Report on Current Reserach
26 Report on Session on Duration of Load and Creep
27 Report on Session on Eurocode 5
28 List of CIB-W18 Papers/Florence 1986
29 Current List of CIB Papers

CIB Papers 19-1-1 up to 19-8-1

CONTENTS VOLUME II

List of CIB-W18 Papers/Florence 1986
CIB Papers 19-9-1 up to 19-105-1
Minutes of IUFRO S 5.02 Meeting, Ljubljiana, Jougoslavia
List of IUFRO S 5.02 Papers/Ljubljiana 1986
IUFRO Papers

# 1. LIST OF PARTICIPANTS

AUSTRALIA

| | | |
|---|---|---|
| R | Beckett | New South Wales Inst. of Techn., Sydney |
| R H | Leicester | CSIRO, Div. of Building Research, Highett |

AUSTRIA

| | | |
|---|---|---|
| R | Hallett | UNIDO, Vienna |

CANADA

| | | |
|---|---|---|
| L | Bach | Alberta Research Council |
| R O | Foschi | University of British Columbia, Vancouver |
| K | Johns | University of Sherbrooke, Quebec |
| B | Madsen | University of British Columbia, Vancouver |
| L | Palka | Forintek Canada Corp., Vancouver |
| C K A | Stieda | Forintek Canada Corp., Vancouver |

DENMARK

| | | |
|---|---|---|
| A | Egerup | Signode, Newbury |
| T | Feldborg | Danish Building Reserach Institute, Hørsholm |
| P | Hoffmeyer | Technical University of Denmark, Lyngby |
| C | Kondrup | Cowiconsult |
| H J | Larsen | Danish Building Research Institute, Hørsholm |
| H | Riberholt | Technical University of Denmark, Lyngby |

FEDERAL REPUBLIC OF GERMANY

| | | |
|---|---|---|
| H J | Blass | University of Karlsruhe |
| H | Brüninghoff | University of Wuppertal |
| F | Colling | University of Karlsruhe |
| J | Ehlbeck | University of Karlsruhe |
| P | Glos | University of München |
| R | Görlacher | University of Karlsruhe |
| G | Steck | University of Karlsruhe |

FINLAND

| | | |
|---|---|---|
| J | Kangas | Technical Research Centre of Finland, Espoo |
| T | Poutanen | Tampere Technical University |
| A | Ranta-Maunus | Technical Research Centre of Finland, Espoo |
| K | Wright | Technical Research Centre of Finland, Espoo |

FRANCE

| | | |
|---|---|---|
| A H | Hamou | Centre Technique du Bois et de l'Ameublement, Paris |
| P | Crubilé | Centre Technique du Bois et de l'Ameublement, Paris |

IRELAND

| | | |
|---|---|---|
| P | Colclough | Institute for Ind. Res. + Stand., Dublin |

ISRAEL

| | | |
|---|---|---|
| U | Korin | Building Research Station, Technion, Haifa |
| S | Peer | Technion, Haifa |

ITALY

| | | |
|---|---|---|
| G | Cardinale | Civil Engineering Consultants, Florence |
| A | Ceccotti | University of Florence |
| G | Giordano | University of Florence |
| G U | Marchi | L.P., Milan |
| L | Paolini | University of Florence |
| M | Pasanisi | C.O.F.I. (Italian Branch) |
| M | Piazza | University of Padua |
| M | Ruffino | L.P., Turin |
| P | Sieni | L.P., Padua |
| P | Spinelli | University of Florence |
| G | Tampone | University of Florence |
| L | Uzielli | University of Florence |
| A | Vignoli | University of Florence |
| F | Zaupa | University of Padua |

JAPAN

| | | |
|---|---|---|
| Y | Hirashima | Forestry and For.Prod.Res. Institute |
| M | Yasumura | Building Research Institute |

NETHERLANDS

| | | |
|---|---|---|
| J | Kuipers | Technical University, Delft |
| T van der Put | | Technical University, Delft |

NORWAY

| | | |
|---|---|---|
| E | Aasheim | Norwegian Inst. of Wood Techn., Oslo |
| P | Aune | Norwegian Inst. of Techn., Trondheim |
| R | Lackner | Norwegian Inst. of Wood Techn., Oslo |

SWEDEN

| | | |
|---|---|---|
| J | Brundin | Swedish Inst. f. Wood Techn. Res., Stockholm |
| B | Edlund | Chalmers University of Technology, Göteborg |
| B | Källsner | Swedish Inst. for Wood Techn. Res., Stockholm |
| R | Kliger | Chalmers University of Technology, Göteborg |
| J | König | Swedish Inst. for Wood Techn. Res., Stockholm |
| B | Norén | Swedish Inst. for Wood Techn. Res., Stockholm |
| T | Schmidt | Swedish Inst. for Wood Techn. Res., Stockholm |
| B | Thunell | Royal Institute of Technology, Stockholm |

SWITZERLAND

| | | |
|---|---|---|
| U | Meierhofer | Swiss Federal Lab. of Test.Mat.+ Res., Dübendorf |
| M | Kessel | EPFL, Lausanne |

UNITED KINGDOM

| | | |
|---|---|---|
| G | Booth | Imperial College, London |
| H | Burgess | TRADA, High Wycombe |
| A R | Fewell | Princes Risborough Laboratory, Aylesbury |
| R | Marsh | Ove Arup, London |
| J | Sunley | TRADA, High Wycombe |
| L | Whale | TRADA, High Wycombe |

UNITED STATES OF AMERICA

| | | |
|---|---|---|
| W A | Baker | American Plywood Association, Tacoma |
| E G | Elias | American Plywood Association |
| J | Johnson | University of Washington |
| E G | Stern | Virginia Polytechnic Inst. + State University, Blacksburg |

## 2. CHAIRMAN'S INTRODUCTION

DR. STIEDA welcomed those attending the joint meeting of CIB-W18A and IUFRO S5.02, with a special welcome to PROFESSOR GIORDANO, MR. SUNLEY and DR. LEICESTER as convenor of the new group CIB-W18B.

He said the meeting was organised by the University of Florence with assistance from the Federation of Italian Wood Industries, and he and PROFESSOR MADSEN would be acting as co-chairmen.

## 3. COOPERATION WITH OTHER ORGANISATIONS

ISO/TC 165: MR LARSEN said the current task was to convert RILEM and CIB results to international standards for test methods, and others on the strength classification of timbers and on structural design. The design standard based on the CIB code would be taken up again in about a year, having been delayed by work on Eurocode 5. This was part of a set for all materials, with a common section on actions, and would extend to hardwoods as well as softwoods.

RILEM: PROFESSOR KUIPERS said the programme had been completed except for work by a group of four persons to finish drafts on test methods for sheet materials, timber in structural sizes, joints, nail plates, nails, staples and structural prototypes, adding that RILEM were keen to continue the cooperation with CIB-W18A when suitable topics could be identified.

At the Chairman's request, he went on to give information about a conference to take place in Luxembourg in the week 21-25 September 1987 or the following week 28 September - 2 October 1987. This would be a combined operation by the CEC and timber promotion agencies of different countries to promote the use of timber structures. It would come towards the end of a 3-year CEC research programme but would not be limited to research, rather a combined symposium to attract those from the practical field of realising structures and also timber suppliers. MR. LARSEN added that the CIB would organise the technical aspects of the occasion, which should be regarded as a joint CIB and Eurocode activity.

CEI-Bois/FEMIB: DR. BRUNINGHOFF gave information on the activities of Sous-Commission GLULAM, saying their production standard had now been completed.

IABSE: PROFESSOR EDLUND said the next Congress would be in Helsinki in 1988 and there would be possibilities for papers on timber under items dealing with (1) the interaction of design and detailing, (2) behaviour under exceptional loading, and (3) building physics.

UNIDO: The interest of UNIDO in CIB-W18 activities was explained by MR. HALLETT. They wanted to get timber used in developing countries, for a start perhaps building a structure to show the possibilities of the native material. He would like to see more representation from the developing countries, and once they started to take an interest UNIDO could hope to assist in financing further developments.

JCSS: This group was stated to be working on probability-based design for structures in general, and participation by CIB-W18A provided a link with other materials.

ASCE: The American Society of Civil Engineers were planning an international conference on timber engineering for September 1988 in Seattle. There would be a call for papers early in 1987, and the Chairman hoped W18A members would contribute.

## 4. CIB-W18B: TROPICAL TIMBERS

Paper 19-105-1 'CIB-W18B : tropical and hardwood timber sructures' was presented by DR. LEICESTER, the convenor of this new working commission. He said the economic background of developing countries would be studied to decide what level of technology was required. Manuals would be prepared to present the basic state of the art, allowing a start to be made using timber in houses and other small buildings.

## 5. TRUSSED RAFTER SUB-GROUP

MR. LARSEN referred to his paper 19-14-1 'Annex on simplified design of W trusses, prepared for Eurocode 5', which he said was developed from work by Riberholt. There were no new technical proposals, but this would serve as a final document for the proceedings. DR. EGERUP pointed out that the moment coefficients depended on load distribution and would vary for countries other than Denmark. MR. LARSEN said the background work had taken a long time, but ISO circles thought a micro-computer approach was preferable and the document had not been adopted by the EEC group, so it would remain as showing the outcome of all the work done.

Later there was an extensive discussion on whether the sub-group should now be terminated, concluding that there was a need to establish guidelines for truss analysis and joint design. It was concluded that Mr. Riberholt or Dr. Noren should chair the group, with a membership listed as Poutanen, Noren, Kallsner, Aasheim or Bovim, Riberholt and a representative from Canada. The Chairman said he would contact these people and try to get their recommendations for the next meeting.

## 6. SAMPLING SUB-GROUP

PROFESSOR GLOS said no static solution exists because the population was not unchanging. Sufficient background had been established in previous papers and he proposed to dissolve the group and replace it by one to study the derivation of characteristic values and establish settings for grading machines.

Further discussion ensued and at a later stage of the meeting PROFESSOR GLOS said the new group should make provision to allow for the adequacy of the data base, introducing a penalty if the number in a sample was below that desirable.

It was concluded that the present group should dissolve and a new one would be formed with Professor Glos as Chairman, on the derivation of characteristic values including sampling for specific characteristic values. The other members would be Elias, Madsen, Brundin, Hadj Amoun and Fewell.

## 7. REPORTS ON CURRENT RESEARCH

PROFESSOR MADSEN took over as Chairman and a number of country reports were presented with PROFESSOR HOFFMEYER as Rapporteur.

## 8. DURATION OF LOAD AND CREEP

Papers on this topic were presented by their authors with PROFESSOR GLOS acting as Rapporteur.

## 9. EUROCODE

Papers related to the Eurocode were presented with MR. FEWELL acting as Rapporteur.

## 10. QUESTIONS RELATED TO STRENGTH DISTRIBUTIONS

Paper 19-6-2 'Confidence in estimates of characteristic values' was presented by the author, DR. LEICESTER, concluding that the simplest of three algorithms was satisfactory for use and that the use of a 75% confidence level was recommended rather than the mean value.

PROFESSOR GLOS questioned the use of the 75% confidence level. He felt a code should give only well established values, not requiring use of a confidence level. If it was not applied by other materials, timber would be penalised and the extra safety would not be regarded as contributing to the safety level in comparison with other materials.

DR. LEICESTER said the Australian standards board required a similar treatment for the different materials, and small samples were used for brickwork. MR. LARSEN thought the latest ISO code did not require use of a confidence level and believed the Eurocode also would not require it.

A description of their work on 'Reliability of panels' was presented by J. Johnson and E. G. Elias. MR. ELIAS said the wide geographical distribution of production facilities led to different performances for the different board materials. An end use rating system had been established, and a data base developed mainly for flatwise bending but extending also to in-plane properties.

PROFESSOR JOHNSON explained the calculation methods employed, which showed the reliability index was sensitive to the distribution type. Further work was considering the confidence limit of the reliability index, using the lognormal distribution.

MR. HALLETT thought the object should be to compare populations rather than differences in the tails of their distributions. MR. LARSEN said the safety index method was based on the properties of a standardized notional distribution and the real form of tail could not be found. Attempts to find the real probability of failure should not be linked with 'beta' which is related to a notional distribution.

PROFESSOR JOHNSON gave a further explanation of his calculation as a modified version of the procedure related to 'beta' but said further consideration would be given to the comments made.

Presenting his paper 19-17-1 'Load factors for proof and prototype testing', DR. LEICESTER said that codes dealt with the design of single elements and not with total structures. The aim should be to achieve the same safety level for all timber elements and their connections. Using the calibrations applied in Australian codes leads to an approximate expression for beams and columns and another for connector systems, which allow an uncertainty factor to be calculated for use in selecting a test load for prototype testing and further factors are given for load duration and configuration.

The paper concludes with a reminder that in general a large margin of safety must be used to allow for the fact that the structures tested may be stronger than average.

## 11. JOINTS

PROFESSOR GIORDANO gave a discourse with the title 'Some studies on joints and health state of ancient timber structures'. DR. STIEDA said the material was gathered from long experience and that new structures could benefit from a knowledge of those of the past; he had noted the good ventilation in the ancient but sound roof of the Sala del Cinque Cento in the Palazzo Vecchio visited on the previous day.

Paper 19-7-2 'Glued joints in glulam' was described by MR. RIBERHOLT, the author. DR MEIERHOFER said his organisation had also made tests on embedded rods. They had to take precautions against foaming of the adhesive, and also found a tendency for the joint to break down under dynamic loading. MR. SCHMIDT suggested it was not a serious matter if bubbles appeared in the adhesive, but MR. RIBERHOLT said they might reduce the shear strength too much and make the glue more sensitive to higher moisture content.

PROFESSOR UZIELLI noted that glulam of normal density softwood was used. The work was of interest in restoration work, sometimes using heavy hardwoods when moisture movement might be troublesome. MR. RIBERHOLT said splits had been induced when the joints had been pressure impregnated and then dried, but they did not have too great an effect on strength. He could not give design values for denser woods.

PROFESSOR GLOS said some adhesives showed a poor long-term behaviour and attempts were being made to develop improved ones. DR. BACH suggested the long-term shear stress for the adhesive might be a factor as well as that for the wood.

Dealing with paper 19-7-1 'Behaviour of nailed and bolted joints under short-term lateral load - conclusions from some recent research', MR. WHALE also described a range of related activities and said that work on the long-term behaviour of joints had now been started.

MR. LARSEN said slip prediction through mathematical models was difficult although some structures were sensitive to slip. MR. WHALE said friction had been eliminated from the joint tests but there was still a high variability even in short-term load-slip characteristics. MR. LARSEN thought slip was of most importance in built-up members.

Answering a question by DR. EGERUP in relation to Figure 2, MR. WHALE said he thought the damage model was rather simplistic. MR. HALLETT said there was a need to avoid low quality steel fastenings in important structures such as bridges, and MR. WHALE said varying manufacturing practice in different countries was one cause of varying steel quality.

Paper 19-7-9 'Advances in technology of joints for laminated timber - analyses of the structural behaviour' by M. Piazza and G. Turrini was dealt with by MR. PIAZZA. He reviewed work on the reinforcement of old timber floors with a concrete slab using shear pins bonded into the wood by epoxy resin, and the difference found in similar wood-to-wood joints tested in the laboratory and then applied in practice. A notable improvement was gained using the adhesive compared with joints without adhesive, giving a great advantage for seismic-resistant joints subjected to large alternating displacements, and for compound members assembled with similar joints. The same advantage was gained in end-jointed beams where the maximum deflections reached were five times those possible in the elastic field.

DR. NOREN summarised his paper 19-7-7 'Design of joints with nail plates - principles'. He said it was proposed as an Annex to the CIB code and the principles agreed with those developed in paper CIB-W18 14-7-1. Comments had been received that the Annex was difficult to follow without diagrams. For the version to be incorporated in the Proceedings, some diagrams could be added from paper 14-7-1.

DR. NOREN went on to deal with his paper 19-7-8 'Shear tests for nail plates' which proposed that tension loading should be added as an alternative to compression for the RILEM specimen, and that the NKB 3-member joint should be an acceptable substitute for the RILEM 2-member joint.

The subsequent discussion concluded that proposals could be made for amending the RILEM/CIB recommendations if specific wording for the changes was submitted, backed by test results. MR. POUTANEN said a greater range of information was needed from tests for use in truss analysis, and it was agreed that he would make a proposal in a paper of one or two pages for W18A to discuss and consider what recommendations should be made to RILEM.

## 12. TRUSSED RAFTERS

Paper 19-14-2 'Simplified static analysis and dimensioning of trussed rafters, Part 2' was described by the author, MR. RIBERHOLT.

DR. KALLSNER asked some questions, concluding that the chosen model must have more restrictions than were apparent. MR. RIBERHOLT said various simplified models were used in different countries and his was a reflection of traditional practices. He dealt with questions on loading from PROFESSOR EHLBECK and DR. EGERUP, concluding that Norway could not follow the recommendations because their loading was outside the limits defined for the model. MR. POUTANEN thought the coefficients would be correct if the connections were made as assumed.

MR. POUTANEN presented his paper 19-14-3 'Joint eccentricity in trussed rafters'. DR. EGERUP asked whether it was necessary to cover all frame effects and MR. POUTANEN said this led to a more realistic stress distribution and more reliable structures. DR. EGERUP said more information was needed to achieve it, and MR. POUTANEN replied that greater error arose using moment coefficients; he said a frame theory excluding eccentricities might be inferior to simple methods. DR. EGERUP felt he was getting valid results with a relatively sophisticated type of frame analysis.

MR. RIBERHOLT said extra fictional members could be put in to improve a frame analysis, but the aim should be simplicity. MR. LARSEN said moment coefficients allowed design to be performed by hand. The Eurocode made provision for frame analysis and he felt it would be helpful to set up rules for general application. PROFESSOR MADSEN said it was desirable to cooperate with the trussed rafter industry.

## 13. STABILITY

Paper 19-15-2 'The bracing of trussed beams' by M. Kessel and J. Natterer was presented by PROFESSOR KESSEL, with illustrations of tests that had been made using strain gauges to find the bracing forces. In the case of a single member, finite element calculations showed that the lateral bracing forces corresponding to a constant axial load were not a realistic representation of those required for an axial load rising from zero at the ends to a maximum at the centre. Corresponding calculations were developed for braced roof trusses, treated as a spatial structure.

The results were remarkably different from those for parallel chord trusses, with a zero bracing requirement at mid-span instead of a maximum value. The paper concluded that a realistic bracing design would require the use of a special form of finite element analysis, which could only be justified for large structures. For smaller ones simple code rules were adequate for practical design but it should be borne in mind that they do not correspond to the real loads applied to the bracing system.

PROFESSOR MADSEN thanked the author for his very valuable presentation.

MR. BURGESS drew attention to the main conclusions of his paper 19-10-1 'Possible code approaches to lateral buckling in beams', saying the same results were obtained as a special case in Dr. Leicester's paper 19-2-1 'Creep buckling strength of timber beams and columns'.

The paper gave a theoretical derivation leading to a design formula for deep beams which is very similar to the one adopted for column design, and the author proposed the new formula for adoption in design codes.

Following the presentation by MR. BLASS of his paper 19-12-2 'Strength model for glulam columns', MR. LARSEN suggested that an alternative application to a single-lamination member would treat the glue-laminated construction as having overall strength and stiffness properties; solid construction also can be thought of as layered material. He thought the paper was very useful, incorporating plastic behaviour and yet allowing a closed form solution to be obtained.

PROFESSOR JOHNS said the work led to an improvement and sophistication of the method in paper 18-2-1 by Buchanan, Johns and Madsen, but that their simpler approach had given good agreement with tests. Questions by PROFESSOR KESSEL and MR. LARSEN in relation to Figure 21 were dealt with by the author.

Paper 19-16-1 'Simulation of fire in tests of axially loaded wood wall studs' was presented by MR. KONIG, starting with slides showing the experimental methods employed. He said real fire tests were also needed but their number and cost could be reduced by the simulation method.

PROFESSOR GLOS asked how the timber quality was established for the tests. The author replied that the lowest grade normally adopted for construction in Sweden was used in the tests. The present objective was to examine behavioural mechanisms, and later work could study the influence of timber grade.

## 14. SEISMIC DESIGN

Introducing his paper 19-15-3 'Racking resistance of wooden frame walls with various openings', DR. YASUMURA showed slides of the experimental apparatus and explained the mathematical model employed which allowed for non-symmetrical panel constructions and for a non-linear load-slip relation for the nails.

Answering PROFESSOR EDLUND, he said a 'bearing wall' was one without openings. DR. FOSCHI asked what was the mode of failure and the author replied that it was normally failure of the nails but sometimes fracture or buckling of the plywood.

DR. CECCOTTI introduced paper 19-15-1 'Connections deformability in timber structures : a theoretical evaluation of its influence on seismic effects' by himself and PROFESSOR VIGNOLI. The work described applied a computer simulation of seismic disturbing forces, finding that not only was ductility important, but also simple deformability.

DR. STIEDA said many areas of the world were subject to earthquakes and it was valuable to have papers on timber structures, which had behaved well in earthquakes. Answering DR. YASUMURA, Dr. Ceccotti said the mass of the beams was 1000 kg/m. Explaining Figure 5 in answer to a question by PROFESSOR EDLUND he said the vertical axis showed the dimension of the Fourier transform.

The Chairman suggested it would be valuable if tests could be done to compare with the simulation.

15. ADDRESS BY DR. MARCHI

An address with illustrations was given by Dr. Giorgio Ulrich MARCHI, consultant to the Italian wood industry federation FEDERLEGNO-ARREDO, on the development of timber engineering in Italy.

MR. HALLETT asked if any rough comparison with the cost of steelwork could be given, and PROFESSOR GLOS said if price was not the reason could DR. MARCHI give some other explanation for the expansion of timber engineering.

DR. MARCHI replied that timber structures became competitive at spans exceeding 20-30m and glulam could go to 100m or more at a cost lower than other solutions. There were side benefits in cheaper foundations, insulation and the absence of cold bridging. Timber was quick and easy to erect and remarkably resistant to seismic disturbance. It was also used in Italy for road and pedestrian bridges, poles, warehouses and other constructions. He believed it had a good future and listed as points for research its long-term behaviour, fire resistance including that of joints and the long-term behaviour of adhesives.

DR. STIEDA said that to achieve developments, three further conditions were necessary in addition to research; groups like W18 and IUFRO to assist in codification, healthy forest and manufacturing industries, and financial resources. He said Dr. Marchi had given a timely reminder on the research needed to join with these other factors.

16. MATERIAL STRENGTH

MR. COLLING presented his paper 19-12-3 'Influence of volume and stress distribution on the shear strength and tensile strength perpendicular to grain', concluding that further work was to be done, starting this year.

DR. LEICESTER commented that the size effect should make allowance for the manner of determining the coefficient of variation as described in a paper he delivered to the South African conference. MR. POUTANEN asked if the work allowed for tension perpendicular to the grain, and the author replied that theoretical work had been done to show how the Weibull theory could be applied in design calculations, but this had not been extended to tension perpendicular. Answering a question by MR. RIBERHOLT, he said the theory excluded shear stress due to bending.

The Chairman said the paper would be taken as a progress report and future work could bear in mind the comments that had been made.

MRS. Kirsti WRIGHT presented her paper 19-6-3 'Fracture toughness of wood - Mode I' written in collaboration with M. Fonselius. Diagrams not in the paper were displayed, showing no detectable influence of member size or loading rate. The marked influence of orientation was explained by reference to wood structure.

MRS. WRIGHT then dealt with her own paper 19-6-4 'Fracture toughness of pine - Mode II'. Here the orientation had not been found important but there was a weak influence of density. The high correlation in the upper part of the lower diagram of Figure 9 gave good prospects of results for practical application.

Answering questions on the diagram on page 5, Mrs. Wright said the horizontal axis was a measure of deflection at a point in the beam and the dots were for the short term, when the load was applied. Replying to DR. FOSCHI and PROFESSOR MADSEN, she said long-term tests were in progress, and six specimens were used for each type of test.

PROFESSOR GLOS asked if there was a correlation with other strength properties to indicate an influence of locality but Mrs. Wright said that in general there had not been much correlation. She was not sure why much better results were obtained with Mode II. An explanation was given to MR. HALLETT on the loss of correlation when results for different slopes were lumped together.

Paper 19-6-5 'Drying stresses in round timber' was given by the author MR. RANTA-MAUNUS.

PROFESSOR GIORDANO remarked that in temperate woods such as oak, beech and larch, and in tropical timbers there were longitudinal growth stresses superimposed on the drying stresses and it was difficult to separate the two effects. The author replied that his work was restricted to the drying of northern species where he felt growth stresses were not so important. Answering a question by PROFESSOR JOHNSON about infinite stress occurring at the centre in a

cylindrically orthotropic analysis, he made further reference to equations in the paper and said two solutions had been investigated, with and without a hole at the centre.

Dealing with further questions, the author explained that the aim of the work was to reduce splitting and loss of value, producing better timber for such purposes as furniture manufacture. He believed the project would contribute to the improvement of kiln drying. DR. LEICESTER said similar work in Australia had been financed by the industry, who felt the work was valuable. DR. FOSCHI pointed out further complications arising from kiln variables and the movement of moisture through the timber.

DR. STIEDA said further discussions would continue among those interested. He was glad to see this complex problem tackled to improve utilisation, perhaps with a spin-off for structural applications.

MR. GORLACHER described his paper 19-6-6 'A dynamic method for determining elastic properties of wood'.

PROFESSOR HOFFMEYER sought to clarify what were the novel features of the work, saying the method was known and instruments were available but the new part was the determination of shear modulus from torsional vibrations and its application as a correction for the influence of shear deformation in bending vibrations.

DR. STIEDA said instruments were already in use commercially, and MR. HALLETT thought their wider application could make a significant contribution to production processes.

MR. WHALE suggested it would be valuable to extend the application of dynamic measuring devices to establish rheological properties of materials by linking the phase difference between stress and strain to creep compliance. He said a project to undertake this type of work was under consideration by his own organisation.

MR. COLLING presented paper 19-12-1 'Strength of glued laminated timber' by J. Ehlbeck and F. Colling.

MR. POUTANEN asked how size effects were overcome in interpreting bending and tension tests. MR. COLLING replied that there was no volume effect in considering a single small specimen. DR. STIEDA said a fingerjoint could have a different strength in glulam than when isolated, and this topic had been studied. MR. RIBERHOLT made further comments on the volume effect. MR. COLLING said the bending strength of glulam beams had been found similar to the tension strength of specimens, which had 80% of the strength of bending specimens. he thought there was no volume effect in glulam beams owing to the effect of fingerjoints, although it might be present in smaller beams.

The Chairman said there were few test data for glulam so the work was valuable and there could be further discussion on the interpretation of test results. PROFESSOR GLOS remarked that the paper was said to be an Annex to the Eurocode but it reflected only the present situation and a better grading system might lead to changes.

Paper 19-5-1 'Stress grading by ECE standards of Italian-grown Douglas Fir dimension lumber from young thinnings' was presented by the author PROFESSOR UZIELLI. He said there had been limitations imposed by testing machine size and a larger one was awaited. The aim for the future was to sample other stands and build up the stock of available data.

PROFESSOR HOFFMEYER clarified a point in the conclusions about the 5th percentile values of MOR for DS8 and DS10 being very close. PROFESSOR UZIELLI said there was a typing error and the correct values were given in Table 3. PROFESSOR HOFFMEYER said poor correlations were often found between single parameters and asked if multiple regression had been tried. The reply was that this had not yet been done.

DR. STIEDA said the paper could be regarded as a progress report and he hoped work would continue along these lines.

## 17. DESIGN WITH WOOD-BASED PANELS

Introducing this Agenda item DR. STIEDA said extensive design data were available for plywood but not for other sheet materials and there was a demand from designers for further data. Responding to a remark by PROFESSOR KUIPERS he said he meant 'strength values' and MR. KONIG said there was need for a number of properties that had not been adequately determined; CIB-W56 dealing with light-weight constructions were interested in wood-based sheets and also other sheet materials.

MR. LARSEN said others could derive design values once the test standard was ready, and PROFESSOR KUIPERS said it would soon be available.

PROFESSOR MADSEN expressed the hope that future IUFRO meetings would give greater coverage to the subject, and DR. STIEDA concluded that this would cater for it without extended activity in W18A.

18. FUTURE IUFRO S5.02 MEETING

PROFESSOR MADSEN said the next meeting would be in about a year's time, possibly in conjunction with a Division 5 meeting and it was agreed to leave the arrangements to him. He said the meeting might be in the period mid-May to mid-June 1987 or the last week of August and the first week of September 1987.

PROFESSOR KUIPERS asked whether there were any requests from S5.02 for work by RILEM and PROFESSOR MADSEN said he would seek suggestions.

DR. FOSCHI said there should be a discussion of what should be the way forward for future meetings. He felt the object was to improve the engineering use of wood in relation to what is done with other materials. MR. LARSEN said it had been agreed that IUFRO would be responsible for research and W18 would convert the results to design methods. MR. HALLETT said different design advice was given by different countries. DR. STIEDA responded that a model code approach was provided by W18, but there were difficulties in gaining universal acceptance.

19. FUTURE CIB-W18A MEETING

MR. COLCLOUGH said a meeting could be held in Dublin near the date of the Luxembourg meeting in late September or early October 1987. There was discussion of an alternative proposal to have the next meeting in Belgium but the conclusion reached was to take advantage of Mr. Colclough's offer and hold it in Dublin.

20. TESTING OF TRUSS PLATES

The conclusion reached in the discussion of paper 19-7-8, reported at the end of item 11 above, was re-affirmed.

21. TRUSSED RAFTER SUB-GROUP

The conclusion reached after further discussion is reported at the end of item 5 above.

22. SAMPLING SUB-GROUP

The conclusion of further discussion is reported at the end of item 6 above.

## 23. COLUMN INTERACTION

PROFESSOR MADSEN referred to a paper from the previous meeting, paper 18-2-1 'Column design methods for timber engineering' by A. H. Buchanan, K. C. Johns and B. Madsen. He said PROFESSOR GLOS had adapted its recommendation as a code formula and a paper by DR. LEICESTER for the present meeting (19-2-1) had shown it as an alternative. The proposal was to change the straight interaction line to a cranked one, and the result could be extended to include creep buckling.

MR. LARSEN said the formal approach of putting forward a paper for acceptance or rejection was not appropriate for CIB work. He thought a code proposal should be written, possibly by a group of people. The background existed and the matter could be put on the Agenda for the next meeting.

MR. POUTANEN said any proposal should allow for a size effect and he would like to see a simpler, shorter version of the paper.

MR. LARSEN said the present code had been drafted five or six years ago and not developed since then. It should keep up-to-date with developments and a number of sections needed changing, including columns, size effects, safety principles and joints. W18 should go through it section by section and see what changes were proposed. DR. LEICESTER thought requests for proposals should not be directed to individuals; anyone should be welcome to send ideas for consideration, and W18 would try and adapt them for international application.

DR. STIEDA concluded that any papers proposing code changes should go to the Secretary for review at the next meeting. He would discuss with Mr. Larsen whether individuals could be invited to look at the different sections.

## 24. OTHER BUSINESS

Old Structures : The Chairman said PROFESSOR KUIPERS was willing to act as a clearing house for information on this topic. PROFESSOR KUIPERS said load duration factors could also be considered and perhaps there could be a paper for the next meeting on combined duration, deterioration and safety features. Responding to a suggestion by PROFESSOR UZIELLI, he said he would try to prepare a standard form on which information could be supplied in a unified way.

Design Criteria for Connectors : DR. LEICESTER thought there should be a discussion of how to derive characteristic values for connectors, as there were difficulties in defining the ultimate load for limit state design. PROFESSOR KUIPERS said the test goal was the load deformation curve, which gives the information needed just as the stress-strain curve does for solids. DR. LEICESTER wanted W18A to consider the derivation of design values from the curve and PROFESSOR KUIPERS said a background paper was needed on safety in timber structures, including joints.

PROFESSOR EHLBECK urged members to check and up-date the membership list. MR LARSEN said the Secretary should write to all those on the list to ask if they will be participating actively, and should eliminate from the list any who do not reply that they will participate. Another suggestion was a note in the CIB Newsletter advising members that they would be removed from the list if they did not write and say they would participate.

DR STIEDA expressed the thanks of those attending the meeting to DR. CECCOTTI and the University of Florence, for the first-class arrangements that had been made for the efficient conduct of the technical sessions and for the organisation of accommodation and tours.

## 25. Research Programs

Rapporteur: P Hoffmeyer

# RESEARCH PROGRAMS

The following is a condensed listing of current wood engineering research projects at those institutions represented at the CIB-W18/IUFRO 5.02 Meeting 1986. The listing is therefore not necessarily a complete listing of wood research projects in the different countries.

The research programs are presented according to country in alphabetic order.

## AUSTRALIA

### CSIRO, DIVISION OF BUILDING RESEARCH

Project 1

Title: *IN-GRADE EVALUATION OF STRUCTURAL PROPERTIES OF SOLID RADIATA PINE AND RADIATA PINE LAMINATED VENEER LUMBER*

Background:
a) There has been some concern that with the use of younger trees the properties of MSG radiata pine are not what they used to be.
b) Radiata pine LVL is a structural product only just being introduced commercially in Australia.

Objectives: Produce design values for LVL and check design values of MSG radiata pine.

Methods: In-grade tests in bending, tension, compression perpendicular, and connector properties (nails and bolts).

End Results:
a) Modify machine to correctly produce target radiata pine design properties
b) Produce design values of radiata pine LVL.

Completion: First attempt at evaluations should be completed by middle of 1987.

Project 2

Title: *DESIGN PROPERTIES OF METAL CONNECTORS*

Background: Current method of evaluating metal connectors is considered unsatisfactory; current code design values are considered unsatisfactory.

Objectives:
a) Develop test criteria for evaluating the design strength of metal connectors standard
b) Derive design values for specific connectors
c) Investigate related factors such as duration of load effects, splitting, influence of washers, etc.

Methods: Test various connectors systems, investigate splitting mode of failure, investigate creep effects.

End Results:
a) New draft of standard for evaluating metal connectors systems
b) Place new design values in Australian timber engineering code

Completion: 1989.

Project 3

Title: *MICROWAVE GRADING METHODS*

Background: Current methods not completely satisfactory.

Objectives: To develop microwave techniques for grading, either in their own right or to assist other grading methods.

Methods: Measure the correlation between structural properties and microwave parameters.

End Results: Development and application of microwave assisted grading methods.

Completion: 1988.

CANADA

ALBERTA RESEARCH COUNCIL

Project 1

Title: *MACHINE STRESS-RATING OF PANEL PRODUCTS*

Background: The variability of stiffness and strength in visually graded structural wood panels places panels at a substantial disadvantage to competitive building materials.

Objectives:
1. To develop a Canadian machine stress-rating system based on panel stiffness determined by means similar to those used in North America for MSR lumber.
2. To implement the MSR system in Canadian industry producing structural panels.

Methods:
1. In cooperation with our manufacturing industry we intend to establish tentative MSR grades for panels based on EI rating of 8000 we have already tested in a static MSR machine for panel products.
2. To develop on-line MSR equipment suitable of operating at mill conditions with a line speed of 48 m/minute or 1 panel per 3 seconds.

End Results: Better utilization of structural panel products for OSB in designed end uses.

Completion: Phase 1 - 1987; Phase 2 - 1988.

Project 2

Title: *ENGINEERING PROPERTIES OF ORIENTED STRANDBOARD (OSB)*

Background: In a few months the daily production of OSB in the province of Alberta will exceed 1000 tons/day. At present the Canadian design code has no published property values for OSB as it has for the competing product plywood.

Objectives:
1. To establish a data base on the engineering properties of Alberta made OSB.
2. To get OSB into the Canadian engineering design codes in line with structural plywood.

Methods:
1. Based on representative sampling of production panels a range of engineering properties is to be tested experimentally. Where possible, full-size panels will be used. The initial phase of the project will be carried out by ARC in cooperation with Alberta industry, COFI, and FORINTEK.
2. Submission of the data for consideration of the Canadian Design Code Committee for engineering design with wood.

End Results: Published engineering properties for OSB suitable for engineering design.

Completion: Phase 1 - December 1987; Phase 2 - As soon as possible after completion of Phase 1.

Project 3

Title: *OSB IN STRESS-SKIN PANELS*

Background: Design procedures for stress-skin panels with plywood skin is well established, but design with OSB is not. The price of OSB relative to plywood encourages OSB as a substitute for plywood in this application.

Objectives:
1. To verify that the design procedures for OSB stress-skin panels can be done as for plywood, assuming appropriate engineering properties for OSB is used rather than those for plywood.
2. To evaluate the technical implications of replacing the lumber web material with a corrugated OSB panel developed by ARC.

Methods:
1. Experimentally to construct and test traditional stress-skin panels with plywood and OSB. Emphasis will be placed on: A. Short-term proof loading to failure and B. Sustained loading of full-sized elements for 1000 days with uniformly distributed loads of 40 P.S.F.
2. To repeat the experiments above, replacing lumber web material with a newly developed corrugated OSB panel.

End Results: Publication of the test results obtained in a format permitting critical evaluation by Canadian designers and manufacturers of stress-skin panels.

Completion: Phase 1 - 1989; Phase 2 - 1990.

FORINTEK CANADA CORPORATION

Project 1

Title: *STRENGTH AND STIFFNESS OF CANADIAN SOFTWOOD LUMBER*

Background: The Canadian lumber industry has initiated a comprehensive in-grade lumber properties research program. More than 36,000 pieces of softwood lumber have been tested to date, to provide reliable in-grade strength and stiffness data.

Objectives: To analyze the large data base and to provide the technical documentation required for accurate estimation of the major short-term (static) strength and stiffness of Canadian in-grade lumber.

Methods: Following internationally (US/Canada) accepted analytical methods, prepare technical reports for and provide technical support to the Canadian Lumber Properties Steering Committee.

End Results: The most important short-term strength and stiffness data will be available for the major and minor Canadian commercial species, grades, and sizes in a form readily adoptable to international code requirements.

Completion: Current phase - 31 March 1987.

Project 2

Title: *DURATION OF LOAD EFFECTS IN CANADIAN SOFTWOOD LUMBER*

Background: Duration of load data and models are required to relate the short-term strength and stiffness of in-grade lumber to the long-term performance of in-grade lumber in various structural applications.

Objectives: Collect long-term strength and creep data in bending, tension, and compression for in-grade lumber of different species, grades, and sizes.

Methods: Following internationally (US/Canada) accepted test methods and analytical techniques, prepare technical reports annually.

End Results: The results will be used to develop duration of load adjustment factors for in-grade lumber.

Completion: Current phase - 31 March 1987.

Project 3

Title: *DURATION OF LOAD EFFECTS IN CANADIAN WAFERBOARDS*

Background: Although waferboard panels are frequently used in light frame construction, test data and analytical models describing their creep and creep-rupture behavior are lacking.

Objectives: Collect short-term and long-term bending data for 5/8 inch (16 mm) thick Canadian waferboard panels, and develop or evaluate models describing their behavior.

Methods: Following internationally (US/Canada) accepted test methods and analytical techniques, prepare technical reports annually.

End Results: The results will be used to develop duration of load adjustment factors for waferboard panels in the new building codes.

Completion: Current phase - 31 March 1987.

Project 4

Title: *DURATION OF LOAD EFFECTS IN TRUSS-PLATE JOINTS*

Background: Understanding connection behavior is essential to develop the full potential of machine and visually graded dimension lumber in truss applications.

Objectives: Develop a basic understanding of, and design parameters for both the short-term and long-term behavior of truss-plate joints in tension.

Methods: Within this exploratory project, new test methods and analytical techniques have been developed for describing and predicting the long-term behavior of truss-plate joints in tension, under ambient laboratory conditions.

End Results: Prediction of creep behavior, failure times, and load duration factors is possible from the available test data, under constant tensile loads and ambient laboratory conditions.

Completion: Current phase - 31 March 1987.

Project 5

Title: *MSR: FLEXIBLE AUTOMATED LUMBER GRADING*

Background: Slope-of-grain indicators were observed to produce recognizable two-dimensional patterns around edge-knots and center-knots. Thus, this inexpensive device might serve as a basis for a microcomputer controlled grading system.

Objectives: Develop a computer program to identify major lumber defects from slope-of-grain indicator readings, and to predict the corresponding bending, tensile and compressive strength and stiffness of a previously calibrated lumber sample.

Methods: Pattern recognition is used to interpret slope-of-grain indicator readings as critical combinations of defects (edge knot, center knot, and slope-of-grain). Effect of these defects on strength and stiffness is predicted from simple closed-form equations.

End Results: A comparison of predicted and measured strength equations values will be used to evaluate the potential usefulness of the proposed method of machine grading.

Completion: Current phase - 31 March 1987.

Project 6

Title: *RELIABILITY OF TRUSSES AND ROOF SYSTEMS*

Background: Canada and the United States have agreed to conduct collaborative research in the general area of light frame wood structures, of which wood truss and roof systems are major components. Forintek and the U.S. Forest Products Laboratory (USFPL) were selected to serve as the primary research agencies for this program. The Canadian contribution to the program will be the development of mathematical models which take advantage of system performance, while full-scale testing programs for the trusses and roof systems will be undertaken in the U.S.

Objectives:

1. To verify and calibrate Forintek's structural analysis program for roof systems using the data obtained by the USFPL full-scale testing of roof assemblies.
2. To extend the investigation of short-term reliability of trusses and roof systems utilizing spruce-pine-fir (S-P-F) machine stress rated (MSR) lumber and visually graded No. 2 S-P-F lumber, by considering several roof spans, truss-plate connection details and roof slopes.
3. To design a model to assess the long-term reliability of trusses and roof systems.

Methods: Computer models which take advantage of system performance were previously developed at Forintek for the structural analysis of trusses and roof systems. Currently the roof system model has been calibrated and successfully verified, employing the preliminary USFPL results of the two full-scale truss-constructed roof system tests.

A comprehensive study of the short-term reliability of truss-constructed roof system has been performed. Two roof slopes (4/12 and 6/12), two types of material (visually graded No. 2 S-P-F and MSR 1650f-1.5E lumber) and snow load at two locations (Vancouver and Quebec City) were considered.

A model to study the long-term reliability of truss-constructed roofs under snow load has been designed by combining Forintek's damage accumulation model and the simulation version of the truss structural analysis model.

End Results: The vertical displacements of roof systems predicted by Forintek's roof systems structural analysis computer program are in good agreement with the preliminary test results. The roof systems analyzed were of 3/12 and 6/12 slope and fully loaded at the design load.

The short-term reliability analysis was performed for truss spans from 16 to 31 ft. The allowable truss spans for the target reliability index of 3.5 associated with the strength limit state have been determined for Vancouver and Quebec City. A comparison of allowable spans for trusses built of MSR 1650f-1.5E lumber and visually graded No. 2 lumber indicates that an increase in the allowable spans, ranging from 10.6 to 16.2 ft., has been realized due to the utilization of MSR lumber for the roof slopes and cities examined. It is shown that 6/12 sloped trusses have larger allowable spans than 3/12 trusses; the difference ranging from 7.7 to 20.6 percent.

Completion: April 1987.

UNIVERSITY OF BRITISH COLUMBIA, DEPARTMENT OF CIVIL ENGINEERING

Project 1

Title: *SHEAR WALLS SUBJECTED TO EARTHQUAKE LOADING (Borg Madsen)*

Background: Most work with shear walls has been done using cyclic loading. Simulated earthquake loads will be used.

Objectives: Develop an improved design method for shear walls subjected to earthquake.

Methods: Theoretical modeling of the elements (lumber, sheathing, and connections) together with experimental verification.

End Results: A designed method.

Completion: Mid-1987.

Project 2

Title: *LENGTH EFFECT IN TENSION (Borg Madsen)*

Background: The tension strength of lumber is a function of its length. This has not in the past been included in the design process.

Objectives: To develop an improved design method for tension members.

Methods: Theoretical modeling followed by experimental verification.

End Results: A design method.

Completion: Early 1988.

Project 3

Title: *SERVICE RELIABILITY OF FLOORS UNDER IMPACT LOADING (Ricardo O. Foschi)*

Background: Implementation of reliability-based design procedures for floor systems requires the consideration of vibrations as a serviceability limit state. Transient vibrations due to foot-fall impact, and human acceptability of such vibrations, are of particular importance.

Objectives: To study the problem of transient impact vibrations in a floor system, link the results with human acceptability standards, study the service reliability of the system, and formulate appropriate design guidelines.

Methods: A previous finite-strip computer analysis of floors (FAP, Foschi, 1982) was expanded to dynamic analysis (DFAP). Two persons were considered on the floor. These could be at any two points, one impacts the floor by falling from a given height while the other receives the effect of the impact. This effect was evaluated according to human acceptability criteria of transient vibrations, developed by Wiss and Parmelee of Northwestern University in 1974. Computer simulations were performed to evaluate the effect of lumber variability on the reliability of the system. Sensitivity studies were carried out on the effect of: span, joist depth, floor damping, human damping, joist torsional restraint (bridging), joist spacing, nail spacing, and relative mass of the two interacting persons.

End Results: The allowable spans of different floors, all built from a given population of lumber joists, were determined in correspondence with a target reliability index $\beta = 2.0$ against average persons finding vibrations from 25 mm and 50 mm foot-falls as "distinctly perceptible". The same spans are obtained through the following design criterion: under a concentrated load of 1 kN at midspan, on a single joist, the deflection must not exceed 1.7 mm for 25 mm fall and 1.3 mm for 50 mm fall. At $\beta = 3.0$, the maximum deflections are, respectively, 1.3 mm and 1.0 mm. This design is more stringent than the present span/360 limit under 1.9 kN/m$^2$ used in North America. However, it agrees very well with standards for the Nordic countries.

Completion: Complete. To appear in Canadian Journal of Civil Engineering.

Project 4

Title: *LOCAL E DETERMINATION FROM GRADING MACHINE MEASUREMENTS (Ricardo O. Foschi)*

Background: Stiffness grading machines measure variation of E along the length of a board, but, due to the short span, still produce an average measure of the true E distribution. Localization of the true minimum may help in improving the correlation between stiffness and strength.

Objectives: To develop software for the correction of grading machine data in order to predict the true distribution of E along the length of the board.

Methods: The problem is basically ill-conditioned, and only an approximate solution is possible. It was resolved by means of a Fourier transform application, with a procedure to automatically eliminate higher frequency noise.

End Results: The procedure was developed, and a computer program was written to run in an IBM AT. Execution times are within the range required for on-line machine grading operations at CLT speed of approximately 6 m/sec.

Completion: A report is being submitted to Wood Science and Technology.

Project 5

Title: *RELIABILITY OF STRUCTURAL SYSTEMS, DURATION OF LOAD, CREEP (Ricardo O. Foschi)*

Background: New reliability-based design procedures are being developed. For wood structures, this implies special problems related to: 1) system behavior (load sharing), 2) larbe variability in properties, 3) load duration effects, and 4) creep and environmental effects.

Objectives: To develop tools for the reliability analysis of wood including structural modeling, duration of load and creep modeling, and load characterization. To develop methods for reliability evaluation.

Methods: Development of finite element analysis of structural systems (static and dynamic, floors and walls, glued-laminated beams, connections). Development of duration of load and creep models suitable for reliability analysis. Development of reliability determination methods based on extended reliability index, taking into account duration of load effects and creep.

End Results: A technique for reliability evaluation at the end of the intended service life has been developed and is reported at this meeting. Duration of load models have been evaluated.

Completion: On-going project. The University will be involved in the development of a new reliability-based design code for Canada, CAN3-086.1-90, to appear in 1990.

Project 6

Title: *FRACTURE MECHANICS OF V-NOTCHES OF ARBITRARY ANGLE (Ricardo O. Foschi)*

Background: Failure modes controlled by crack propagation starting at root of sharp notches must be considered in structures where such notches are present. For arbitrary angle notches, the crack would propagate as a mixture of Mode I (opening) and Mode II (shear). This research follows up on results from Walsh, Leicester, and others in Australia.

Objectives: To study the stress intensity factors at roots of sharp notches as a function of notch geometry and orientation relative to the grain. To consider the interaction between Mode I and Mode II, and to develop a failure criterion and design guideline.

Methods: A finite element analysis was produced, using singularity-enriched elements near the root. The elements are orthotropic, quadratic isoparametric. A program, NOTCH, was written.

End Results: Stress intensity factors were studied as a function of notch angle and grain orientation. In particular, right angle notches in beams were considered. A failure criterion was developed and verified by testing. Further research is being carried on regarding the development of interaction failure enveloped for Modes I and II at different singularity strengths. A paper on the analysis and pilot test is being submitted to the Journal of Engineering Mechanics of ASCE.

Completion: Research is continuing on experimental phase.

Project 7

Title: *GLULAM RIVET CONNECTIONS UNDER ECCENTRIC LOADING (Ricardo O. Foschi)*

Background: The Glulam Rivet is a fastener used in Canada in glued-laminated construction. Design procedures are in place for loads without eccentricities with respect to the centroid of the connection. Both rivet bending and wood failure modes are considered. There are no similar procedures for eccentric loadings.

Objectives: To develop an analysis of failure modes in eccentrically loaded Glulam Rivet connections, verify it, and produce guidelines.

Methods: For the rivet bending mode, nonlinear load/slip characteristics were used to predict the failure load for the connection rotating and displacing under moment and shear. The interaction between moment and shear at failure was obtained. For the wood failure mode a three-dimensional finite element analysis was performed for the stresses around the rivet cluster, and wood failure in tension perpendicular and shear was predicted using brittle fracture theory.

End Results: The analysis was verified by testing, with good agreement. A design procedure was proposed for the rivet bending mode. Guidelines were proposed for wood failure, and a computer program was written to develop tables of design loads.

Completion: Completed. Results being submitted for publication in the Canadian Journal of Civil Engineering.

## DENMARK

### COWICONSULT, CONSULTING ENGINEERS AND PLANNERS AS

Project 1

Title: *CREEP AND DURATION OF LOAD OF CEMENT BONDED PARTICLEBOARDS EXPOSED TO DIFFERENT AND VARYING LEVELS OF MOISTURE AND TEMPERATURE*

Background: Cement bonded particleboards are undoubtedly a means of extending the possible applications of the use of wood-based board materials. Compared to particleboards bonded with synthetic resins, the prime attributes are: increased durability, fire resistance, low sound transmission, resistance to attack by termites, other insects, and fungal decay.

Objectives: The objective of this investigation is to contribute to the body of knowledge of creep and load characteristics of cement bonded particleboards, in particular to determine the effect of climatic conditions on these characteristics. The project aims at evaluating and extending existing models for determining creep and life span.

Methods: Creep and lifetime is measured for cement bonded particleboards in dead load bending, subjected to different and varying levels of relative moisture and temperature.

The properties of creep and lifetime will be correlated to short-time strength and stiffness, and to non-destructive properties.

End Results: An increased knowledge of the durability of cement bonded particleboards and, if possible, a knowledge of how to transfer durability test results from one climatic zone to another.

Remarks: In cooperation with
Building Materials Laboratory, Technical University of Denmark
Department of Structural Engineering, Technical University of Denmark
The Danish Building Research Institute

Completion: 29 February 1988.

### DANISH BUILDING RESEARCH INSTITUTE

Project 1

Title: *SLIP IN JOINTS UNDER LONG-TERM LOADING*

Background: Lack of knowledge of stiffness and strength of long-term loaded mechanical joints exposed to alternating humidity.

Methods: Recordings of slip of full-scale splice joints arranged in rigs in climate rooms and exposed to pure tension with humidity shifts between dry and humid conditions every six weeks for two years.

End Results: To obtain realistic slip and strength values for design use.

Completion: June 1987.

TECHNICAL UNIVERSITY OF DENMARK, BUILDING MATERIALS LABORATORY

Project 1

Title: *DURATION OF LOAD PROPERTIES OF SPRUCE LUMBER AS INFLUENCED BY MOISTURE*

Objectives: To assess the influence of varying moisture content on the time to failure and creep for spruce lumber subjected to bending.

Methods: Dimensions 45x95x1800 mm. 1100 boards of two quality grades are tested at two different stress levels. Moisture content: constant 12%, constant 19%, and varying (12 → 19 → 12, etc.).

Cooperation: Princes Risborough Laboratory, U.K.
TräteknikCentrum, Sweden

End Results: To produce reliable duration of load factors for timber codes.

Remarks: EEC-sponsored.

Completion: 1988. Preliminary report available 1986.

Project 2

Title: *NON-DESTRUCTIVE EVALUATION OF WOODEN TRANSMISSION POLES*

Objectives: A feasibility study which is intended to serve as a precursor to a detailed research project aimed at developing technological solutions to the pre-installation assessment and in-situ inspection processes for wooden transmission poles.

Methods:
- Study of pole supply and user industry
- Study of current methods of pole inspection
- Assessment of rot development in poles
- Demonstration of the technical requirements and practicality of NDE systems

Cooperation: TRADA, U.K.
Universität München, West Germany

End Results: To demonstrate the advantage of developing NDE methods for prediction of the residual strength of timber.

Remarks: EEC-sponsored.

Completion: 1986.

TECHNICAL UNIVERSITY OF DENMARK, DEPARTMENT OF STRUCTURAL ENGINEERING

Project 1

Title: *TENSILE STRENGTH OF WOOD FLANGES*

Background: The tensile strength of a wooden flange is normally set equal to that which is found in a simple tensile test where the specimen is free to deform laterally. But when the flange is a part of a structure, its lateral deformation is more or less restricted.

Objectives: The objective is to determine by tests and theoretical considerations the effect of lateral deformation control on the tensile strength of wooden flanges. Different growth defects and different defect sizes will be investigated since pilot tests have shown that the tensile strength of a flange is not so sensitive to large defects as that of a simple test specimen.

Methods: Tests with simple tension specimens with I- and Boxbeams and with special built-up beams with continuous lateral bracing will be carried out. The curvature about two axes will be measured in order to calibrate a theoretical description of the static behavior of the tensile flange.

End Results: Knowledge to the relation between the tensile strength of a wooden flange and its simple tensile strength, the size and position of growth defects, and the lateral bracing of the flange.

## FEDERAL REPUBLIC OF GERMANY

### UNIVERSITÄT KARLSRUHE, VERSUCHANSTALT FÜR STAHL, HOLZ UND STEINE

Project 1

Title: *BENDING STRENGTH OF GLULAM BEAMS; INFLUENCE OF DENSITY, MOE, KNOTS, FINGER JOINTS, BEAM DEPTH*

Background: The bending strength of glued laminated beams depends on the tensile strength of the outer laminations and its finger joints. Moreover, the density and MOE of these laminations influence the bearing capacity of glulam beams.

Objectives: Determination of the bending strength of glulam beams depending on the influencing factors. Investigations on a possible depth (volume) effect.

Methods: By means of a calculation model simulating the design of a glulam beam and estimating the load-bearing capacity on the basis of FE. These results are compared to bending tests, with beam depths ranging from 250 mm to 1250 mm.

End Results: With the calculation model it should be possible to check the influence of any variables in the grading process and to compare the results to a limited number of full-size tests with glulam beams. Finally, the present safety level of such structures may be estimated.

Completion: December 1986.

Project 2

Title: *RELIABILITY DESIGN OF GLULAM TIMBER COLUMNS BASED ON THE PROBABILISTIC SAFETY CONCEPT*

Background: Current design methods neglect the stochastic scattering of the dominant influencing variables such as structural imperfections affecting the strength and strain properties of wood and geometric imperfections having a direct effect on the load-bearing capacity of compressive members.

Objectives: Determination of the present safety level and development of proposals for partial safety coefficients for design codes.

Methods: Using the Monte-Carlo simulation method a great number of columns with scattering properties along the length and over the cross-section are simulated, and the ultimate loads are calculated by a second-order plastic analysis. The results are statistically evaluated for different slenderness ratios, loading combinations, etc. The distribution functions of the ultimate loads and the loading effects lead to a statement on the failure probability.

End Results: A probability based design concept for glulam timber columns.

Completion: March 1987.

Project 3

Title: *PERP-TO-GRAIN TENSILE STRESSES IN CURVED, TAPERED, AND CAMBERED GLULAM BEAMS*

Background: The tensile strength perp-to-grain of curved beams depends on the stress distribution, the size of stressed volume, and the material properties of the wood such as density, knots, growth rings, etc.

Objectives: Determination of the perp-to-grain tensile strength of glulam beams depending on the influencing parameters.

Methods: By means of tests in structural sizes, the perp-to-grain tensile strength of curved glulam beams will be determined. Variables are the wood quality, the stress distribution, the geometry, and the size of the beams.

End Results: Suitable design rules taking into account the dominating parameters.

Completion: December 1989 (the project will be started in 1987).

Project 4

Title: *STRENGTH OF DOWELED JOINTS WITH GLULAM, CONIFEROUS, AND NON-CONIFEROUS SOLID TIMBER*

Background: For doweled joints the timber design codes require certain spacings, end and edge distances. The German draft timber code requires staggering if the distance of the dowels in the grain direction is less than 8 d, with d = dowel diameter. For greater spacings staggering is not required. In the case of the staggered arrangement of the dowels the prebored holes have to be displaced by d/2 in relation to the line of center points in case of unstaggered arrangement of the dowels. Thus, successive dowels in the grain direction are displaced in opposite direction perpendicular to the grain. Tests with the dowels not being staggered indicated a lower level of safety compared to joints with staggered dowels. This was especially found for doweled joints with a large slenderness ratio, i.e. member thickness/dowel diameter.

Objectives: Tests are performed to clarify the differences in the load-carrying capacity of doweled joints with the dowels being staggered or not. Furthermore, the influence of other parameters such as dowel diameter, slenderness ratio, and wood density on the load-carrying behavior is investigated.

Methods: Test series with different arrangement of the dowels, different dowel diameters, different wood density are performed. Symmetrical 4-member double-joint tension specimens and 3-member compression specimens are used.

End Results: Recommendations for the timber design codes including EUROCODE 5.

Completion: March 1987.

Project 5

Title: *JOINTS WITH MECHANICAL FASTENERS AND GUSSET PLATES MADE OF RESIN-COMPRESSED VENEER WOOD (PRESSLAM)*

Background: In a previous research program suitable materials for timber joints with mechanical fasteners and connection plates made of improved wood were tested regarding the relevant physical and mechanical properties. Now, joints using such materials for fasteners and gusset plates shall be developed.

Objectives: Tests shall be carried out in order to describe the load-deformation behavior and the load-carrying capacity of joints with non-metallic mechanical fasteners. Due consideration has to be given to the effects of changing climatic conditions as well as questions raised from the former investigations such as the problem of the notch impact strength when resin-compressed veneer wood is used for connection (gusset) plates. The main objective will be to check if the hypothesis for the determination of the load-carrying capacity of joints with metallic fasteners may be transformed to non-metallic fastening materials using corresponding characteristic strength values for the different materials (i.e. embedding strengths, yield strengths, etc.).

Methods: Non-metallic dowels made of hardwood or presslam-wood and cover plates as well as gusset plates made of such materials are used to manufacture the joints. The test series take into account the dominating influencing parameters. The results are expected to be a useful basis for design rules for such joints.

End Results: Proposals for design rules for timber joints using non-metallic fasteners and gusset plates, especially resin-compressed veneer wood.

Completion: December 1989.

Project 6

Title: *GLUED STEEL RODS IN GLULAM; STRENGTH AND LOAD-CARRYING CAPACITY DUE TO LONG-TERM LOADING AND CHANGING CLIMATIC CONDITIONS*

Background: In a former research project to be finished during 1986 the stress distribution along the rods and the load-carrying capacities of glued steel rods was investigated under constant climate and in short-term tests. No prediction on the long-term behavior of such connections is possible.

Objectives: Using the same manufacturing methods of the joints and the testing and measuring devices of the former short-term tests, some test series shall be performed with test specimens using steel rods in side grain and end grain of glulam. Stresses in the rods and the stress distribution along the rods will be measured continuously during long-term tests.

Methods: Test series with changing moisture content, changing temperatures, and different load levels; combination of these three influencing parameters.

End Results: Time-dependent stress distribution in glued steel rods under changing environmental conditions; decrease of load-carrying capacity, if occurring.

Completion: 1989 or later.

UNIVERSITÄT MÜNCHEN, INSTITUT FÜR HOLZFORSCHUNG

Project 1

Title: *THE EFFECTS OF FOREST DECLINE ON WOOD QUALITY (EUROPEAN SPRUCE AND PINE)*

Background: Increasing forest damage has led to concern among wood users lest strength properties of timber be adversely affected. This tended to disrupt timber trade.

Objectives: To investigate whether there is an effect of the extent of contamination on timber quality.

Methods: Timber produced from sound and ailing trees is examined non-destructively and tested in bending, compression, and tension.

End Results: The investigations indicated a loss of vitality in diseased trees as suggested e.g. by a reduction in water supply. However, wood properties were not affected. No differences were found with respect to physical characteristics, particularly strength properties, types of failure, storage properties of roundwood.

Completion: 1986.

Project 2

Title: *CREEP AND LIFETIME OF SPRUCE LAMINATIONS LOADED IN TENSION AND IN COMPRESSION*

Background: The introduction of new reliability based design codes requires the determination of modification factors. Relevant investigations on structural timber loaded in tension and compression are non-existent.

Objectives: To determine appropriate duration of load modification factors in tension and compression.

Methods: The test plan comprises constant load test series (stress level 14 and 21 $N/mm^2$) and ramp load test series (time to failure 10 sec, 1 h, 1 month) under constant and cyclic climate. Dimensions of tested laminations range from 30x120 to 30x180 mm.

End Results: Present results indicate that in full-size timber too creep in compression is five times that in tension. There is a distinctive duration of load effect which is at least as large in tension as it is in compression. The relation between duration of load and strength level found in bending tests carried out in Canada could not be verified here.

Completion: In part completed in 1986; tests are being continued.

Project 3

Title: *INVESTIGATIONS OF THE EFFECT OF DIFFERENT GRADING METHODS ON STRENGTH PROPERTIES (CHARACTERISTIC VALUES) OF STRUCTURAL TIMBER*

Background: Existing national and international grading rules (DIN, ECE) are occasionally uneconomic and contradictory. There are no rules for modern machine and electronic grading systems.

Objectives: To advise standardization committees on the advantages of alternative grading methods, to provide practical suggestions for the preparation of a revised code, and to contribute towards the international harmonization of grading rules.

Methods: The results of several hundred bending, compression, and tension tests stored in our data bank are analyzed using different visual and mechanical/electronic indicating parameters or parameter combinations. Different methods for derivation of settings and for quality assurance are taken into account.

Completion: 1987.

Project 4

Title: *INVESTIGATION OF THE STRENGTH OF GLUED TIMBER JOINTS*

Background: Due to non-existent design values, the use of glued joints in timber construction is at present limited to a few special applications. A wider use of glued joints promises innovative and economic solutions.

Objectives: To develop a design method for glued truss joints.

Methods: Glued joints are loaded to failure. Test series are performed with different materials (solid wood, plywood), different angles between chord and diagonal, different sizes and shapes of glued areas, different gluing methods, and different glues.

Completion: 1988.

FINLAND

TECHNICAL RESEARCH CENTRE OF FINLAND

Project 1

Title: *FRACTURE MECHANICS APPLICATIONS ON WOOD*

Background: We have done fracture mechanics research since 1983 as a governmental project. The project yielded in a literature study and two publications concerning Mode I K-fracture toughness. A new project started in 1986.

Objectives: K-fracture toughness will be compared to J-integral. Mode II fracture toughness shall be studied. Long-term tests in Mode II are going on. Materials are pine, spruce, LVL.

Methods: J-tests have been made as the ASTM metals standard explains. Mode II is tested with beam specimens. Different analysis methods are used and compared. The material properties effect is studied statistically.

End Results: Fracture toughnesses for wood, Mode II, short-term and long-term behavior. Critical J-integral values for wood. Practical solutions for notched beams, if possible.

Completion: January 1988.

Project 2

Title: *DRYING STRESSES IN TIMBER*

Background: The value of timber and lumber is lowering due to splitting during the kiln drying with today's practice.

Objectives: To determine the stresses during different kiln drying schedules in order to avoid situations which result in splitting and checking.

Methods: A finite element method taking into account the cylindrical orthotropy of wood and relaxation of stresses.

End Results: Better kiln drying schedules.

Completion: 1988.

Project 3

Title: *CAD FOR TIMBER CONSTRUCTION*

Background: Lack of CAD programs suitable for design of timber constructions while commercial programs are available for steel and concrete constructions.

Objectives: The development of an interactive computer program for a microcomputer which is easy to use and allows the optimization of the cost of construction. Glulam structures will be included in the program first.

End Results: A microcomputer program for design of timber constructions.

Completion: 1987.

FRANCE

CENTRE TECHNIQUE DU BOIS ET DE L'AMMEUBLEMENT

Ten projects were reported at the Xalapa meeting in 1984. The status of these is as follows:

Project 1

Title: *POPLAR PLYWOOD FOR TIMBER FRAME HOUSES*

Status: Completed.

Project 2

Title: *OAK IN TIMBER FRAME HOUSES*

Status: Completed.

Project 3

Title: *"FEU-STRUCTURE" (FIRE IN TIMBER FRAME HOUSES)*

Status: Not completed.

Project 4

Title: *MECHANICAL PROPERTIES AND GRADING OF HOME GROWN SITKA SPRUCE, DOUGLAS FIR, MARITIME PINE*

Status: Partly completed (see Project 13)

Project 5

Title: *MEDIUM SPAN CONNECTOR PLATES FASTENED ARCHES*

Status: Completed.

Project 6

Title: *HARDWOODS IN TRUSS RAFTERS*

Status: Completed.

Project 7

Title: *RACKING RESISTANCE OF WALLS WITH NAILED PLYWOOD OR PARTICLEBOARD*

Status: Completed.

Project 8

Title: *YOUNG EUROPEAN SOFTWOODS IN GLULAM*

Status: Delayed approximately 4 months.

Project 9

Title: *HOME GROWN JUVENILE DOUGLAS FIR IN GLULAM*

Status: Completed.

Project 10

Title: *POPLAR IN STRUCTURAL USE*

Status: Completed

Project 11

Title: *CREEP IN BENDING, GLULAM AND SOLID TIMBER*

Background: Creep factors are very important when determining structural members; improvement of knowledge is needed.

Objectives: To determine more precise values for glulam and solid timber members in common conditions in order to implement the values to be stated in the future national code.

Methods: Solid and glulam beams are settled in bending for two or four years.

End Results: Comparison glulam/solid; effect of MC (11 & 19%), species (poplar + four coniferous), and bending stresses: 5, 10, 15 MPa.

Completion: End of 1988, end of 1989.

Project 12

Title: *BRACING SYSTEMS EFFICIENCY IN FLOOR BEAMS*

Background: The behavior of floor beams with metallic diagonals might be largely improved using efficient bracing devices.

Objectives: To determine the best ways for improving the behavior of such floors in order to optimize the cost and the development of these products.

Methods: Bending tests on floors supported by five beams. Parameters tested: four types of beams, three bracing methods, deflection under point loads.

End Results: Recommendations for design and on-site operations.

Completion: End of 1986.

Project 13

Title: *MECHANICAL PROPERTIES AND GRADING OF FRENCH-GROWN TIMBER, VARIOUS SPECIES*

Background: See Xalapa proceedings, Projects 4 and 10.

Objectives: Better knowledge of these species and optimization of visual grading.

Methods: Tests on 40x100 and 50x150 mm boards (MOE, MOR bending and tension, density, SOG, knots) researches on grading parameters.

End Results: Specific grading rules and design stresses.

Completion: Completed: Spruce, fir, maritime pine. In progress: Black pines, Douglas fir, poplar, Sitka spruce (1987).

IRELAND

INSTITUTE FOR INDUSTRIAL RESEARCH AND STANDARDS, FOREST PRODUCTS DEPARTMENT

Project 1

Title: *DETERMINATION OF WOOD QUALITY OF STANDING TREES BY A NON-DESTRUCTIVE METHOD*

Background: Marketing of timber is best served by identifying end-use prospects. At present field assessment of stands of timber is limited in this regard.

Objectives: To develop a non-destructive method by which wood quality of standing trees can be categorized into three end uses: structural, non-structural, and pulp.

Methods:
1. Evaluation of wood density by subjecting cores taken from tree stems to X-ray microdensitometric and ultrasonic techniques.
2. Evaluation of knottiness by branch and subsequent plank measurements, using computer modeling.
3. Comparison of above with grade and strength tests on planks.
4. Assessment of fiber quality for pulping from cores.

End Results: A "Wood Quality Indicator Factor" will be developed to allow field managers and users to categorize timber.

Completion: July 1987.

Project 2

Title: *UPGRADING THE UTILITY OF SMALL-DIAMETER SOFTWOOD SAWLOGS*

Background: The expanding forestry program is yielding increased volume of small sawlogs, the utility of which is in areas of low added value.

Objectives:
1. To evaluate the yield of sawn timber from small sawlogs in Irish sawmills.
2. To assess methods of processing small logs by slicing and lamination to produce board products.

Methods:
1. Sawmill production of sawn wood from small logs evaluated in terms of yield by volume and grade out-turn.
2. Matched samples of spruce timber either converted to plank or sawn lengthwise and laminated; resultant boards tests for MOE and MOR.
3. Short bolts sliced and slices re-laminated to produce boards. Methods of lamination evaluated by shear testing glue-line.

End Results: Should increase end-use prospects of small sawlogs and thus improve added value.

Completion: July 1987.

ITALY

UNIVERSITY OF FLORENCE

Project 1

Title: *DEFORMABILITY OF CONNECTIONS IN TIMBER STRUCTURES; ITS INFLUENCE ON SEISMIC EFFECTS*

Background: Brittle failure of materials is a very negative characteristic for structures in earthquake zones. Timber in structural dimensions shows a brittle behavior, and some modern seismic building codes (see Eurocode 8) have proposed very penalizing rules for timber structures. However, deformability and ductility of connections seem to have a very important role in decreasing the magnitude of inertial forces produced by earthquakes on timber structures.

Objectives: To achieve some deeper knowledge about the behavior of connections in timber structures under dynamic loads, and about its importance referring to seismic effects on structures.

Methods: Field testing of existing structures under dynamic loads, for both small and finite deformations. Full-scale laboratory testing of several types of joints under dynamic loads. Development of appropriate mathematical models, both linear and non-linear, for description and simulation of behavior of timber and timber joints.

End Results: To propose more realistic and less expensive criteria for design of timber structures in earthquake areas.

Completion: End of 1988.

Project 2

Title: *STRENGTH OF CHESTNUT POLES FOR OVERHEAD POWER AND TELECOMMUNICATION LINES*

Background: In Italy wood poles for power and telecommunication lines are made of both preservative-treated softwood (mainly Pinus sylvestris L., imported) and non-treated chestnut (Castanea sativa L.) from Italian coppices. Codes for design of poles need to be updated. Approximately 200,000 chestnut poles per year are used at present, mainly for telecommunication lines.

Objectives: To assess actual strength of chestnut poles in relation to size and wood defects. To establish rules and methods for inspection, permissible shape defects, and allowable stresses for engineering design of chestnut poles.

Methods: Sampling from several production areas. Full scale testing of poles, measurement of shape, defects, some non-destructive properties (pole's natural frequency in free vibration, longitudinal ultrasonic velocity, specific gravity), durable heartwood's amplitude, moisture content, and properties of small clear specimens from zones near fracture. Analyzing safety and serviceability requirements. Making suggestion for new standards.

End Results: Proposed text for new standards, including criteria for sampling from consignments and technical specifications for poles. Making data available for new code for engineering design of chestnut poles.

Completion: Pilot project on 120 poles to be completed in 1986.

Project 3

Title: *BEHAVIOR OF REPAIRS MADE ON OAK STRUCTURAL ELEMENTS WITH EPOXY RESINS, UNDER SEVERE MOISTURE VARIATIONS*

Background: Several repairs have been made in Italy with epoxy resins and bars of steel or fiberglass on wood structural elements in buildings of historical interest. No published information has been found relating to potential risk of failure due to swelling of high density wood such as oak in case of severe moisture changes (e.g. wetting of wood for accidental reasons).

Objectives: To assess behavior of repairs and variation in strength in case of severe moisture changes.

Methods: Making experimental repairs in specimens of oak wood, submitting them to severe moisture variations, and assessing the strength variation.

End Results: Knowledge of variation in strength of mentioned repairs in laboratory conditions. Evaluation of potential risk for existing and future repairs.

Completion: End of 1987.

Project 4

Title: *STRESS-GRADING OF ITALIAN-GROWN SOFTWOOD DIMENSION LUMBER*

Background: Very little data are available at present on characteristic stress and elasticity values for Italian-grown softwood dimension lumber.

Objectives: To contribute filling the mentioned lack of knowledge on characteristic stress and elasticity values for Italian-grown softwood dimension lumber. To develop, if needed, most appropriate rules and techniques for such task. To improve engineering design of timber structural elements made of Italian-grown wood.

Methods: Sampling, grading, testing, deriving characteristic values for measured properties, according to existing Italian and international standards (including ECE recommended standards); possibly elaborating new and most appropriate grading rules and methods.

End Results: Knowledge and diffusion of information on the subject. Eventually incorporation of results in Italian national standards.

Completion: On-going work.

JAPAN

MINISTRY OF CONSTRUCTION, BUILDING RESEARCH INSTITUTE

Project 1

Title: *DEVELOPMENT OF TECHNIQUES FOR ENGINEERED WOODEN BUILDINGS*

Background: Present design procedure for wooden construction is based on the small dwellings and does not accord with the engineered wooden buildings.

Objectives: This project aims at developing the design procedure and the production system for the engineered wooden buildings to make it possible to apply wooden structures to larger use.

Methods: The project contains the following subjects:

1. Development of design procedure for the wooden buildings
   a. Structural design
   b. Fire design
   c. Design on the durability and inhabitability
2. Development of production system of the wooden buildings
   a. Adjustment of the basis of production and supply
   b. Development of manufacturing and execution
3. Development of evaluation method for wooden buildings in urban area.

"Structural design" will include the experimental and theoretical study on the stress grading, mechanical joints, evaluation of the bearing elements, full-scale test of the wooden building, and the analysis of the dynamic behavior of wooden buildings.

End Results: Manuals for the engineered wooden buildings.

Completion: March 1990.

FORESTRY AND FOREST PRODUCTS RESEARCH INSTITUTE

Project 1

Title: *NON-DESTRUCTIVE TESTING ON EXISTING HOUSES BY MEANS OF VIBRATION GENERATOR*

Background: The latest theory in seismology shows the repetitiveness of earthquakes telling us a big earthquake will attack Japan in the near future. Structural performance against the earthquake may vary decreasingly with time. It is one of the important problems how to evaluate it.

Objectives: Developing a non-destructive test to evaluate aseismic performance of the existing wooden houses.

Methods: A portable vibration generator is used for tests to get the dynamic characteristics of wooden houses which are expected as parameters to evaluate the structural performance of the construction.

End Results: After obtaining the relationships between the ultimate strength and dynamic characteristics of buildings, non-destructive testing methods which can predict the ultimate strength will be developed.

Completion: In the near future, before a big earthquake occurs.

THE NETHERLANDS

TECHNICAL UNIVERSITY OF DELFT, STEVIN LABORATORY

Project 1

Title: *REACTION KINETICS OF DEFORMATION AND DAMAGE PROCESSES IN WOOD*

Background: The theory is well developed for other materials, and this has to be done for wood too. If it is the only way to explain experimental phenomena and to predict the behavior outside the specified test conditions.

Objectives: To develop a simplified model that remains close to physical reality to be able to explain and correlate experimental results by determining the activation parameters of the main molecular processes.

Methods: Creep, relaxation, etc. tests at different temperatures and moisture contents.

End Results: Development of the theory to improve safety description.

Completion: For constant temperature and moisture content conditions the results will be available the beginning of 1987.
A follow-up for changing temperature and moisture conditions will probably be started in 1987 and finished in 1988.

Project 2

Title: *MECHANICAL PROPERTIES OF LOCALLY REINFORCED JOINTS*

Background: Improvement of strength and stiffness, especially of doweled, moment-resisting joints,
Objectives: by improving shear strength, tension-perpendicular, and embedment strength.

Methods: Thin steel plates or glassfiber mats are glued onto the surface of beams with which knee joints are made with steel dowels. These joints are loaded (normal and shear forces and moments) in Standard Short Duration (SSD) test as well as in long-duration loads (for about 3/4 to 1 year).

End Results: Guidelines for calculation of the above joints.

Completion: First phase, beginning of 1987.

Project 3

Title: *DURATION OF LOAD EFFECT ON JOINTS*

Background: Very limited information is available about this subject.

Objectives: Determination of the time-to-failure (TTF) of joints, with nails, shear plates and split rings under loads higher than 55% of the mean standard short-duration strength. Determination of possible damage caused by continuous loading to levels at and lower than 50%, measuring also deformations (C&D-project).

Methods: Joints are loaded to 50%, 40%, and 30% of the SSD-strength. After two years the 50% joints are unloaded and then the SSD-strength determined. If no strength decrease (= damage) can be demonstrated, the 40% and 30% level joints are loaded to 50% and 40%, respectively. After four years joints loaded to 40% (2 years) and 50% (2 years) will be unloaded and then tested for SSD strength. Etc., etc.

End Results: Determination - verification of damage history to improve safety description.

Completion: About 1998.

NORWAY

NORWEGIAN INSTITUTE OF WOOD TECHNOLOGY

Project 1

Title: *QUALITY AND WOOD WORKING PROPERTIES OF NORWAY SPRUCE (PICEA ABIES) AND SITKA (PICEA SITCHENSIS) GROWN IN THE WEST-COAST REGIONS OF NORWAY*

Background: Study of wood properties on timber collected from reafforestation fields in western Norway. Comparison to indigenous material.

Objectives: Timber from western Norway has lower density and strength and stiffness than indigenous material, but cannot be separated visually from that indigenous material.

Methods: Sampling logs from 8 regions in western Norway. A small sample was tested on strength and stiffness in full sizes (50x100 and 75x200 mm).

End Results: Strength and stiffness differ from indigenous material, but cannot be sorted from that visually. That makes machine grading necessary.

Completion: Finished 1986.

Project 2

Title: *HIGH QUALITY TIMBER OF SMALL CROSS SECTION (50x50 mm) OF NORWAY SPRUCE (PICEA ABIES). GRADING, STRENGTH AND STIFFNESS PROPERTIES*

Background: Light-weight I-beams of wood need high grade flange material. Usual grading before splitting the timber to flanges causes distortion of grading values.

Objectives: To find out if the visually graded timber (Norway spruce) 50x100 mm could produce satisfying confidence even to the split dimension (50x50 mm). Testing by tension-proof loading. Find the intercorrelations between wood property parameters and a reliable grading procedure on small cross-section timber.

Methods: Visually graded timber (50x100 mm) was tested on physical and strength and stiffness properties before splitting to flange dimension 50x50 mm. Proof loading in tension // grain was applied.

End Results: Visual and machine grading of unsplit timber before cutting to flange dimensions (50x50 mm) does not satisfy the grading on small cross-sections. Proof loading by tension // grain will ensure grading demands.

Completion: Completed 1986.

SWEDEN

CHALMERS UNIVERSITY OF TECHNOLOGY, DIVISION OF STEEL AND TIMBER STRUCTURES

Project 1

Title: *CREEP IN TIMBER, PARTICLEBOARD, AND COMPOSITE STRUCTURES*

Background: It is difficult to estimate the long-term performance of built-in components in composite structures.

Objectives: Prediction of the creep characteristics of stressed-skin panels consisting of wood-based materials in the web and compression flange and a steel sheet in the tension flange in constant environmental conditions and at constant stress levels.

Methods: Determination of creep data for the component parts of stressed-skin panels should be sufficient to predict the long-term deformation of the entire structure.

End Results: Model for the prediction of the long-term deformation of stressed-skin panels.

Completion: March 1987.

Project 2

Title: *FRACTURE MECHANICS IN WOOD STRUCTURES*

Background: In connection with the project concerning holes in glulam beams the question arose whether fracture mechanics could be used or not.

Objectives: To summarize the present knowledge about fracture mechanics applied to wood structures and determine the basic fracture characteristics for Swedish spruce and pine.

Methods: Literature survey and testing using standard ASTM testing procedures.

End Results: Give basic fracture characteristics for Swedish wood and judging the possibility to use fracture mechanics to evaluate the failure load.

Completion: On-going.

Project 3

Title: *GLULAM BEAMS WITH HOLES*

Background: Previous studies dealt with the design of reinforcement at holes and stress concentration around the holes, but no study has been done yet concerning the strain distribution through the "hole thickness".

Objectives: Study of the uniformity of the strain distribution through the beam and the reinforcement at the tensile corners of the hole for a glulam beam simply supported with a concentrated load applied at midspan. Prediction of crack loads and comparison with experimental ones.

Methods: The strain data collected at different locations near the hole (tensile corners; inner and outer faces of the plywood reinforcement, both sides of the beam) should be sufficient to study the strain distribution.

End Results: Model for the strain distribution through the beam thickness. Improvement of the design method of reinforcement.

Completion: September 1986.

Project 4

Title: *HARDBOARD WEBBED I-BEAMS - CONCENTRATED LOAD BEARING CAPACITY*

Background: The load bearing capacity is governed by web buckling and/or material strength. The use of deeper and more slender beams requires a better knowledge of the failure mechanisms.

Objectives: To determine the load bearing capacity for concentrated load at different locations for hardboard webbed beams with different relations between beam depth and web thickness.

Methods: Laboratory tests with three different loading positions, four different beam depths, and three different hardboard thicknesses.

End Results: Expected test results will be matched with existing design formulae, which might be refined.

Completion: 1987.

Project 5

Title: *WALL RACKING - STATIC AND REPEATED LOADING*

Background: Timber walls are often designed as stressed-skin elements to take in-plane horizontal loads. The skin is plywood or hardboard nailed to lumber studs. There is a need for more information on how such walls should be designed for earthquake loading.

Objectives: To determine the load carrying capacity of typical walls under monotonous static and repeated (alternating) horizontal loads. To improve the design with respect to strength.

Methods: Experiments with different walls. Successive improvements depending on the results of previous tests.

End Results: Proposals for suitable design and detailing. Design method for walls subjected to wind or earthquake loading.

Completion: Beginning of 1987.

SWEDISH INSTITUTE FOR WOOD TECHNOLOGY RESEARCH

Project 1

Title: *LONG-TERM LOADING OF STRUCTURAL TIMBER*

Background: ECE-project on long-term loading of wood. Testing of structural timber (matched populations of different grade) has produced deviating results in terms of duration factors, possibly due to the difficulty to predict the short-term strength to which the long-term results are referred.

Objectives: To check on available results of time to failure at long-term loading at different stress levels of structural timbers with specified "defects", particularly knots of different types.

Methods: Testing in bending of pairs of carefully matched specimens, one in short-term, the other in long-term loading. The matching is the crucial part of the project. Cutting a log at great precision makes it possible to obtain two "identical" specimens symmetric to the pitch and further, with equal size and location of knots, and with very similar grain angle around the knot as well. In some cases one single knot is cut into two symmetric halves. In other cases two knots of the same size in adjacent annual clusters are used.

End Results: Load-duration factors for the code which are referable directly to grade decisive defects or indirectly to any grade.

Completion: First stage concerning matching statistics completed during 1985. The long-term loading will be finished in 1989.

Project 2

Title: *LENGTH-WISE STRENGTH AND STIFFNESS VARIATIONS IN STRUCTURAL TIMBER*

Background: In probabilistic design of timber structures there is a need for data concerning strength and stiffness variations in the longitudinal direction of structural timber.

Objectives: To study the influence of parameters like quality, cross-sectional dimensions, load positions, and length of the members. In the first place the strength in bending will be investigated.

Methods: After a very careful examination of the properties of the timber members, they will be loaded to failure.

End Results: Strength and stiffness data for probabilistic design.

Project 3

Title: *GUIDE FOR THE DESIGN OF TIMBER FRAMED HOUSES AGAINST WINDLOADS*

Background: Design against windloads has in the past been performed with rather rough methods in Sweden. At the institute an experimental and theoretical investigation of panels as wind-bracing elements in timber framed walls has been done.

Objectives: To write a design guide for the stabilization of the whole house against windloads, by the use of available research results from Sweden and other countries.

End Results: A guide for the design of timber framed houses against windloads.

Completion: 1986-1987.

SWITZERLAND

INSTITUT DE CONSTRUCTION EN BOIS, ECOLE POLYTECHNIQUE FEDERALE DE LAUSANNE

Project 1

Title: *INVETIGATION OF NAILED WOOD-STEEL-CONNECTORS*

Background: Lots of new types of connectors are available on the market nowadays. Everybody should be able to use these connectors without license or patent. Indications for the cost of nailed joints should be given.

Objectives: Systematical work with respect to parameters as nail characteristics, nail distances, joint dimensions, and wood density.

Methods: Testing of joints up to 400 kN.

End Results: Possibility of using very small distances between the nails when the holes are pre-drilled. Systematical reduction of the distances between nails in order to get small and dense joints.

Completion: Autumn 1986.

Project 2

Title: *COMPOSITE STRUCTURES IN LUMBER AND CONCRETE*

Background: Present knowledge about physical and especially static behavior of lumber/concrete composite structures is not sufficient to design in an economic manner.

Objectives: In application of analysis of layered beams find out the influence of various parameters on composite behavior to reduce material requirements and give a reliable prediction of action under load.

Methods: Theoretical investigation of different construction types, test of different connector types, at least test of full-scale floors to verify hypothesis.

End Results: A design concept containing constructional rules as well as methods for calculation of stresses and deflections.

Completion: September 1986.

SWISS FEDERAL LABORATORY FOR MATERIALS TESTING AND RESEARCH (EMPA), WOOD SECTION

Project 1

Title: *ASSESSMENT OF PROPERTIES OF TIMBER OF SICK OR DEAD TREES (KILLED BY ACID RAIN)*

Methods: Assessment of basic parameters (density, moisture distribution), physical behavior (moisture equilibrium, swelling and shrinking), mechanical properties and changes of workability.

Completion: 1987 (first stage - spruce).

Project 2

Title: *BEHAVIOR OF WEATHER-EXPOSED PRESSURE-TREATED GLULAM TIMBER*

Objectives: Moisture and other changes in the wood. Forming of cracks and delamination.

Methods: Periodical measuring of MC, crack opening and delamination, shrinking and swelling.

Completion: 1986 (Stage IV).

Project 3

Title: *INFLUENCE OF PRESSURE TREATMENTS ON PRF GLUE BOND*

Methods: Tensile strength of cross specimens after a number of wettening cycles.

Completion: 1987 (Stage II).

Project 4

Title: *IMPROVEMENT OF IMPREGNATION RETENTION OF EUROPEAN SPRUCE*

Objectives: Increasing the naturally very low permeability of the spruce wood to warranty sufficient uptake.

Methods: Laser incising.

Completion: 1987 (Stage II).

Project 5

Title: *SUPERVISION PROGRAM OF NEWLY BUILT TIMBER BRIDGES*

Objectives: Gathering information on effectiveness of durability promoting and other measures.

Methods: Visual controls and moisture measurements.

Completion: Open.

Project 6

Title: *AIR LEAKAGE OF BUILDINGS OF AND WITH TIMBER*

Objectives: Investigation of the reach and the causes of the problem. Development of a measuring system. Development of appropriate counter measures.

Completion: 1987.

UNITED KINGDOM

PRINCES RISBOROUGH LABORATORY

Project 1

Title: *ASSESSMENT OF LONG-TERM LOAD/DEFORMATION CHARACTERISTICS OF NAILED JOINTS*

Background: The project arose from discussions within the UK joints committee on what data are required to determine a predictive model and examine the suitability of code values.

Objectives: To predict the short-term and long-term behavior of nailed joints.

Methods: Single and double shear joints in European redwood tested to RILEM method, 5 nail diameters, 4 grain orientations. Embedment tests at 3 stress levels. Strength tests at 2 stress levels.

Completion: Short-term tests are being carried out now. Long-term tests are about to begin and will take 5 years.

Project 2

Title: *EXTENSION OF EXISTING GRADING SYSTEMS TO SMALL SECTION SIZES*

Background: Currently in the UK stress grading is limited to sizes greater than 35x60 mm. There are situations (flanges of plyweb beams for example) where smaller section sizes need to be graded.

Objectives: To check the suitability of the current visual and machine grading techniques to grading small section sizes. Propose changes if necessary.

Methods: Measure visual and machine grading characteristics and test for MOE, bending strength and tension strength. 4 sizes - 35x35, 35x45, 35x60, 45x45.

End Results: Minimum size that can be graded in BS 4978 will be reduced.

Completion: Spring of 1987.

Project 3

Title: *EVALUATION OF THE INADEQUACIES OF PLYWEB BEAM MANUFACTURE*

Background: Project is the result of the high incidence of excessive deflections of plyweb beam roofs causing ponding and sometimes collapse. Polytechnic of Central London carried out tests on model beams which suggest the creep is caused by small changes in moisture content.

Objectives: To examine the effect of temperature and humidity on the beam deflections and see if full size beams match the PCL results.
To estimate the relative creep due to shear and bending stresses.
To give more guidance in the code to designers.

Methods: Four of each of three types of beam are loaded, two with design load, and two with half design load.
Beams are 300 mm deep with span of 4.8 m and webs of 6 mm Douglas fir ply, 6 mm Finnish birch ply, and 4.8 mm hardboard.

Completion: These tests will last until mid-1987. The results will then dictate the direction of further work.

Project 4

Title: *THE STUDY OF LOAD DURATION AND MOISTURE EFFECTS*

Background: The work is being carried out in cooperation with Sweden and Denmark. Sweden has supplied the timber. UK is carrying out bending strength tests with constant humidity, and Denmark with varying humidity.

Objectives: To provide more data for modeling these effects, but based on European species.

Methods: Bending test frames as used by Forintek. 42x95 mm specimens at two stress levels and two qualities. 10% moisture content.

Completion: Tests of the first part are almost complete, and a preliminary report was presented at the Canadian DOL workshop in 1985. More work will be done to analyze these results when data are available from Denmark. Creep measurement data is also being looked at.
It is intended to carry out similar tests on British grown Sitka spruce which is fast grown, low density, and suffers from compression damage in a high proportion of pieces. Completion 1990.

TRADA, TIMBER RESEARCH AND DEVELOPMENT ASSOCIATION

Project 1

Title: *DESIGN ASPECTS OF FLOOR VIBRATION*

Background: Present static deflection limit does not necessarily ensure satisfactory vibrational performance of timber floors.

Objectives: To develop method of design which incorporates proper vibrational criteria and recommend modifications to current construction practice for improving floor performance.

Methods: Construct and test laboratory-built floors. Take measurements from in-situ floors. Develop design model and derive recommendations.

End Results: Method of predicting vibrational performance at the design stage resulting in better serviceability of timber floors.

Completion: September 1986.

Project 2

Title: *NON-DESTRUCTIVE EVALUATION OF WOODEN TRANSMISSION POLES*

Background: Present pole inspection techniques do not give a sufficiently reliable early indication of decay. An accurate measure of pole strength is needed for both pre-installation and in-situ examination.

Objectives: The present work is a feasibility study as part of the European Community Program 'Basic Research in Industrial Technologies for Europe' (BRITE) and is aimed at studying the European pole market, trends in pole use, current inspection methods, and possible techniques for future development.

Methods: Various methods of pole inspection are being investigated both theoretically and experimentally - these include ultrasound, vibration, and radiation techniques.

End Results: The present feasibility study will produce a review of the situation regarding poles in Europe and of investigation techniques. It is hoped that a full research project will be awarded as part of the BRITE program. This will aim at producing an instrument or instruments for pre-installation and in-situ testing of poles.

Completion: September 1986.

Project 3

Title: *THE EFFECT OF NON-UNIFORM LAMINATE PROPERTIES ON THE OPTIMIZATION OF GLUED LAMINATED TIMBER*

Background: Following from the conclusions of an earlier visiting fellowship which reviewed the current state of the UK glulam industry, and opportunities for its future, British Industry, TRADA, Brighton Polytechnic, and SERC have combined to sponsor this research.

Objectives: To improve design and fabrication procedures for glulam in the UK, and thereby to improve its viability in UK design solutions.

Methods:
a) detailed stress analysis
b) substitution of non-destructive grading procedures for laminate selection
c) examine the economy of laminate upgrading by defect removal and finger jointing
d) consider the merits of alternative adhesive formulations in glulam production.

End Results: Optimization of glulam lay-up and development of more rational design and fabrication methods for glulam.

Completion: 1989.

Project 4

Title: *FASTENER PERFORMANCE IN PARTICLEBOARDS*

Background: Ongoing projects at TRADA and PRL will provide data for the specification of a Structural Grade of Chipboard which has enhanced strength and durability properties. In order to implement designs using such a board, fastener properties need be established.

Objectives:
a) To obtain fastener performance data suitable for the codification of Structural Grade chipboard
b) To establish a test and analysis procedure suitable for the assessment of fastener performance in other particleboards.

Methods: Type testing of complete joints, nail embedment testing of various existing chipboards, and subsequent analysis of test results.

End Results: Recommendation of suitable short-term basic lateral load values for nails in Structural Grade chipboard.

Completion: April 1988.

Project 5

Title: *DEFORMATION OF WOOD-BASED PRODUCTS AND JOINTS UNDER LONGER-TERM LOADING*

Background: Previous research projects have concentrated upon deriving reliable "short-term" properties for selected types of mechanical joint. However, this data will currently be multiplied by extremely crude factors to account for load duration, these having mainly been derived from bending tests on small clear wood specimens.

Objectives: To establish the effect of longer-term loads on creep deformations in selected solid timbers, sheet materials, and joints.

Methods: Materials testing of joints in sheet material and solid timber specimens. Development of a predictive model able to account for the effects of load level and previous load history, on creep deformations.

End Results: Application of the predictive model in the calibration of design code modification factors dealing with serviceability aspects of load duration.

Completion: December 1987.

Project 6

Title: *LATERAL STABILITY OF TIMBER CONSTRUCTIONS*

Background: Improved calculation methods are needed for design to avoid instability in timber members and constructions.

Objectives: Develop code recommendations for stability calculations and for the design of restraint systems.

Methods: Study existing literature and methods applied in other countries, leading to simplified formulae for design. Work so far has covered deep beams with lateral load now extending to similar members with end load.

End Results: Project reports, conference papers, and improved constructions. Proposals for the code of practice and recommendations for further work on bracing.

Completion: December 1987.

U.S.A.

AMERICAN PLYWOOD ASSOCIATION

Project 1

Title: *DEVELOPMENT OF AN IN-GRADE STRUCTURAL PANEL PROGRAM*

Background: Plywood allowable design stresses in the USA are currently based on the data derived from small clear specimens of solid wood. Correction factors are applied to modify this data to predict plywood behavior. The system is difficult to apply to new species, products, and changing technology.

Objectives: To develop characteristic values for mechanical and physical properties of structural-use panels. The data base will consist of test data collected from an ongoing in-grade sampling scheme for plywood, OSB, and waferboard.

Methods: ASTM methods for flatwise bending, shear-through-the-thickness, shear in the plane of the plies, tension and compression will be used. Physical properties may require additional test method development.

End Results: A panel design specification for all structural-use panels will be developed. The format may be in the form of conventional design values or may be in the form of capacities relative to a reliability based design format.

Completion: 1989.

Project 2

Title: *DEVELOPMENT OF A STANDARD FOR STRUCTURAL COMPOSITE LUMBER (SCL)*

Background: Laminated veneer lumber (LVL), wood-based composite beams, and oriented strand type products are being introduced as structural members in U.S. markets. The producers must provide information on their product's capacities in order to be approved for specific construction applications.

Objectives: To establish a uniform program for the development of characteristic values and provide for ongoing quality assurance in the production of SCL. Mechanical, physical, and durability requirements will be defined.

Methods: ASTM methods for bending on edge, flatwise bending, tension, shear, compression, and fasteners are proposed.

End Results: A proprietary standard outlining sampling techniques, test methods, statistical analysis, and ongoing quality assurance programs applicable to SCL will be published.

Completion: 1987.

Project 3

Title: *DEVELOPMENT OF A PERFORMANCE STANDARD FOR EXTERIOR SIDING*

Background: The development of new siding products, construction techniques, and the need for consumer satisfaction have prompted the APA to develop a performance standard for siding products.

Objectives: To develop a performance-based standard for evaluating wood-based products as exterior siding. Products are evaluated for structural, physical, finishing, and durability performance.

Methods: Test methods were developed to evaluate.
a) residual indentation and strength relative to applied loads
b) stability to resist moisture-induced buckling and thickness swell
c) finish adhesion and surface stability
d) bond durability

End Results: A proprietary standard outlining sampling techniques, test methods, statistical analysis, and ongoing quality assurance programs relative to exterior siding has been published.

Completion: May 1986.

VIRGINIA POLYTECHNIC INSTITUTE AND STATE UNIVERSITY
ASME MH1 COMMITTEE STANDARDS (accepted, under revision, in preparation)

Project 1: *TERMINOLOGY AND DEFINITIONS COVERING PALLETS AND RELATED STRUCTURES (r)*

Project 2: *TEST PROCEDURES FOR PALLETS AND RELATED STRUCTURES (a)*

Project 3: *PROCEDURE FOR DETERMINATION OF DURABILITY OF WOODEN PALLETS AND RELATED STRUCTURES (a)*

Project 4: *DRIVEN FASTENERS FOR ASSEMBLY OF PALLETS AND RELATED STRUCTURES (a)*

Project 5: *PALLET SIZES: INDUSTRY SURVEY OF PALLET SIZES IN USE (r)*

VIRGINIA POLYTECHNIC INSTITUTE AND STATE UNIVERSITY
BROOKS FOREST PRODUCTS CENTER

Project 1

Title: *PERFORMANCE OF TRUSS PLATE WITH PLURALITY OF TEETH STAMPED FROM SAME PLATE HOLE*

Galvanized-steel truss plates, with three barbed teeth stamped from each plate hole and protruding at right angle to plate into fastened wood members, were 43 and 73%, respectively, more effective in parallel-to-plate-hole direction and in parallel-to-grain tension-load transmission in butted two-member southern pine and spruce joints than similar same-size plates with single tooth stamped from each plate hole. The plates with three teeth per plate hole were 35 and 63%, respectively, more effective in tension-load transmission perpendicular to plate-hole length direction in butted-member southern pine and spruce joints than similar single-tooth-per-hole plates. Tests on three-member joints are in progress.

Project 2

Title: *INFLUENCE OF VARIATIONS IN TEST SET-UP FOR PERFORMANCE OF INCLINE-IMPACT TESTS ON LEADING-EDGE IMPACT RESISTANCE OF WOODEN PALLETS*

Comparative test data were obtained on the influence of the following variables:

a) ANSI/ASME MH1.4.1-85 Standard Procedures for Testing Pallets: Loaded pallet placed on dolly of testing device with leading edge of bottom-end deckboard flush with forward edge of dolly.

b) ASTM D1185-85 Standard Test Methods for Pallets and Related Structures Employed in Materials Handling and Shipping: Loaded pallet placed on dolly of testing device with leading edge of top and bottom-end deckboards parallel to forward-leading edge of dolly and overhanging it by 50 mm (2 in.).

c) VPI&SU Test Method: Loaded pallet placed on dolly of testing device against vertical segment of angle iron fastened to dolly parallel to its leading edge, with back of angle iron fastened 3.75 in. from dolly's leading edge.

The test data are being evaluated.

Project 3

Title: *PREDICTION OF FAILURE STRESS IN NOTCHED BEAMS*

The research objective is to develop a rational, implemental design procedure for notched wood beams. Design equations will be developed to predict beam strength and stiffness with variable loading conditions, material properties, and notch geometries. Both filleted and sharp notches are included. This work is an extension of the maximum stress approach developed by Gerhardt of USFL.

Project 4

Title: *ANALYSIS OF GLUE-LAMINATED TIMBER SPACE FRAME AND LATTICE DOMES*

This research is aimed at (a) developing a finite element model of curved wood beams that considers torsion, bending, and axial forces; and (b) computer analysis of whole dome and frame structures using the beam element model.

Project 5

Title: *INFLUENCE OF FIRE-RETARDANT TREATMENT ON TENSION PROPERTIES OF SOUTHERN PINE LUMBER*

The objective is to determine any effects of treating and redrying on the distribution of tensile strength of full-size 2x6 southern pine lumber.

Project 6

Title: *INFLUENCE OF FIRE-RETARDANT TREATMENT ON STRENGTH AND STIFFNESS CHARACTERISTICS OF MECHANICALLY FASTENED JOINTS*

This investigation covers the effects of fire-retardant treatment on the properties of nailed, screwed, and bolted joints. Both parallel and perpendicular-to-grain joints are examined.

Project 7

Title: *CHARACTRISTICS OF JOINTS IN BLOCK-TYPE PALLETS*

Nailed and stapled joints, typically found in block-type pallets, are examined for lateral stiffness and strength, in addition to rotational characteristics. Block characteristics (species, lumber or composite, and moisture content) as well as direction of nailing are included in this study.

Project 8

Title: *RATE-OF-LOADING EFFECTS IN TENSILE PROOF TESTING OF SOUTHERN PINE LUMBER*

Economical proof testing in tension required rapidly applied loads. Rate of load effects can influence identification of a lower percentile value in the tension strength distribution. This study is to develop correction factors for tension strength due to rate effects at various levels of population percentile.

Project 9

Title: *TENSION PROOF-TEST DAMAGE IN SOUTHERN PINE LUMBER*

The potential proof-test damage to the tension strength of three grades of southern pine lumber is experimentally determined. Three proof-load levels are used. Negligible damage has been found to date.

Project 10

Title: *OPTIMIZATION OF BOLTED JOINT DESIGN USING YIELD THEORY*

This study looks at the use of the European yield theory for bolted joints to optimize failure modes, geometry, and materials for most efficient use.

Project 11

Title: *FIELD APPLICATION OF PALLET DESIGN SYSTEM (PDS)*

Design assistance is given to pallet manufacturers and users based on the computerized Pallet Design System developed by Virginia Polytechnic Institute and State University in cooperation with the U.S. Forest Service.

Project 12

Title: *PALLET-FASTENER QUALITY ANALYSIS*

Nail and staple manufacturers as well as users are provided information on the characteristics of these fasteners and as to whether they meet specified requirements. The fastener toughness is determined using the improved MIBANT device.

Project 13

Title: *FIELD CALIBRATION OF STRUCTURAL DESIGN METHODOLOGY FOR STRINGER AND BLOCK-TYPE WOODEN PALLETS*

A comparison is made, on the basis of field surveys, between the estimated performance and user-expected performance of wooden pallets. The results of these comparisons are used to set the level of safety in the reliability-based Pallet Design Procedure (PDS).

Project 14

Title: *RELIABILITY-BASED DESIGN OF BLOCK-TYPE PALLETS*

Engineering and durability design procedures are being developed for block-type pallets similar to those in previous efforts for stringer-type pallets. The procedures will be cast in a reliability-based format and programmed for PC usage.

CANADA

WOOD SCIENCE DEPT. LAVAL UNIVERSITY, QUEBEC CITY

Project 1

Title: MODEL PREDICTION OF GRADING MACHINE PERFORMANCE

Background: Most current stress-grading machines are based upon measuring modulus of elasticity (E) of lumber using the bending principle. A better understanding of the bending principle in its application to measurement of E is required for designing improved grading machines for the future.

Objectives: To develop computer simulation models predicting E of lumber as measured by stress-grading machines.

Methods: Implement general bending theory into static and dynamic models. Verify the models experimentally.

End Results: Computer simulation models which could provide assistance in the design of future machines.

Completion: January 1988

Session

26. Duration of Load and Creep

Rapporteur: P Glos

## DURATION OF LOAD AND CREEP

11 papers were presented at the session on duration of load and creep.

P. HOFFMEYER presented his paper 19-9-2 "Duration of load effects for spruce timber with special reference to moisture influence". A status report was given on results available so far of constant load bending tests on European spruce timber in two different constant environments. The results indicate that moisture content has a strong effect on duration of load and that weak timber has a stronger duration of load effect than strong timber.

In the discussion is was regretted that so far no deflection measurements had been made which might be useful for deriving failure criteria.

In his paper 19-9-6 "Creep and lifetime of timber loaded in tension and compression" P. GLOS summarized the results of ramp load and constant load tension and compression tests on European spruce timber in a constant environment. Both in tension and compression the duration of load effect of weak timber was clearly stronger than reported in earlier bending tests carried out in Canada.

The discrepancy between Canadian and European duration of load test results as revealed in papers 19-9-2 and 19-9-6 was taken note of by the group but elicited no further comment or discussion.

J. KUIPERS presented his paper 19-6-1 "Effect of age and/or load on timber strength. Does time and/or load damage timber?" The paper describes a number of tests on timber, on joints and on trusses, and discusses the possible shape of damage curves over time and the consequences for a safety concept.

In the discussion it was pointed out that the results presented are confirmed by theoretical work already published and it was argued that it is hardly feasible to experimentally detect the degree of damage of timber loaded for some time. R.H. LEICESTER mentioned that in Australia tests showed a reduction in strength for nail plate connectors loaded for several years up to a stress level of 30 %. U. MEIERHOFER added that with time wood becomes more brittle due to chemical changes.

Paper 19-9-1 "Another look at three duration of load models" was presented by R.O. FOSCHI. It compares the goodness-of-fit of Nielsen's, Foschi's and Gerhard's models with experimental data of Western hemlock lumber in bending. The first two models are shown to be sufficiently flexible to accurately fit the specific set of data.

In his second, well-received paper 19-1-1 "Duration of load effects and reliability based design (single member) R.O. FOSCHI gives an example for a single member reliability analysis with consideration of the duration of load effect. The paper describes a fast and accurate calculation method. However, some judgements have to be made in order to obtain good results.

R.H. LEICESTER dealt with paper 19-2-1 "Creep buckling strength of timber beams and columns". The paper describes a model which takes into account the effects of initial crookedness and of creep.

H.J. LARSEN was not in favour of the inclusion of these effects into a timber design code. He argued that this would complicate the code without necessarily improving the results, bearing in mind that crooked columns will not be accepted and the failure criteria used are not considered appropriate.

T.A.C.M. VAN DER PUT presented paper 19-9-3 "A model of deformation and damage processes based on the reaction kinetics of bond exchange". The model related deformation and damage behaviour of wood to bond breaking and bond reformation on a molecular level. This leads to a complicated phenomenological model which subsequently needs to be simplified in order to provide solutions in functional form.

In the discussion it was expressed that the work must progress further before the influence of the simplifications and hence the possible field of application for the model can be assessed.

In his paper 19-9-4 "Non-linear creep superposition" U. KORIN dealt with a procedure for creep prediction of viscoelastic materials under complex load histories which he had developed some time ago and which might have potential for creep prediction of wood components too.

In his paper 19-12-4 "Time dependent behaviour of glued-laminated beams" F. ZAUPA reported on creep and time to failure of 4 beams, of which two each were loaded at a stress ratio of 30 and 60 % respectively, over a period of up to three years.

R.O. FOSCHI and B. MADSEN pointed out that this work is interesting as it involves only few long-term tests on glulam beams. It would be cheaper, however, to design duration of load tests on a more elementary level, such as tests on laminae with and without finger-joints. P. HOFFMEYER and U. MEIERHOFER expressed surprise that climate changes had not affected creep deformation. F. ZAUPA explained that climate effects had been eliminated by means of linear regression. R.H. LEICESTER mentioned that in the Australian code a creep factor of 2 is used for long-term load.

T. FELDBORG presented paper 19-7-5 "Slip in joints under long-term loading". He gave a status report on slip measurements of splice joints under long-term tension load and under different climate conditions. Test results available so far indicate that under changing climate conditions rather high slip values occur and that short-term deformation of joints does not give sufficient information on slip due to long-term loading.

With respect to mechano-sorptive creep of joints R.H. LEICESTER commented that Australian experiments tend to indicate that changes in "atmospheric emc - conditions" are not relevant. Changes in atmospheric vapour pressure appear to have a greater effect. Also, it has been observed that air velocity has a marked effect on creep rate.

R. KLIGER presented paper 19-9-5 "Determination of creep data for the component part of stressed-skin panels". It deals with deformation measurements of wooden beams loaded in bending, wooden specimens loaded in shear, particleboard loaded in compression and glued wood to steel and wood to particleboard joints using silicone and PVA adhesives. The goodness-of-fit of two different rheological models was shown.

The discussion showed clearly that the idea to put much effort into the definition and measurement of initial deformation as a basis for the calculation of relative creep was not supported, because the absolute values rather than the relative ones are thought to be relevant.

CIB-W18/19-2-1

INTERNATIONAL COUNCIL FOR RESEARCH STUDIES AND DOCUMENTATION

WORKING COMMISSION W18 - TIMBER STRUCTURES

# CREEP BUCKLING STRENGTH OF TIMBER BEAMS AND COLUMNS

by

R H Leicester
CSIRO Division of Building Research
Australia

MEETING NINETEEN
FLORENCE
ITALY
SEPTEMBER 1986

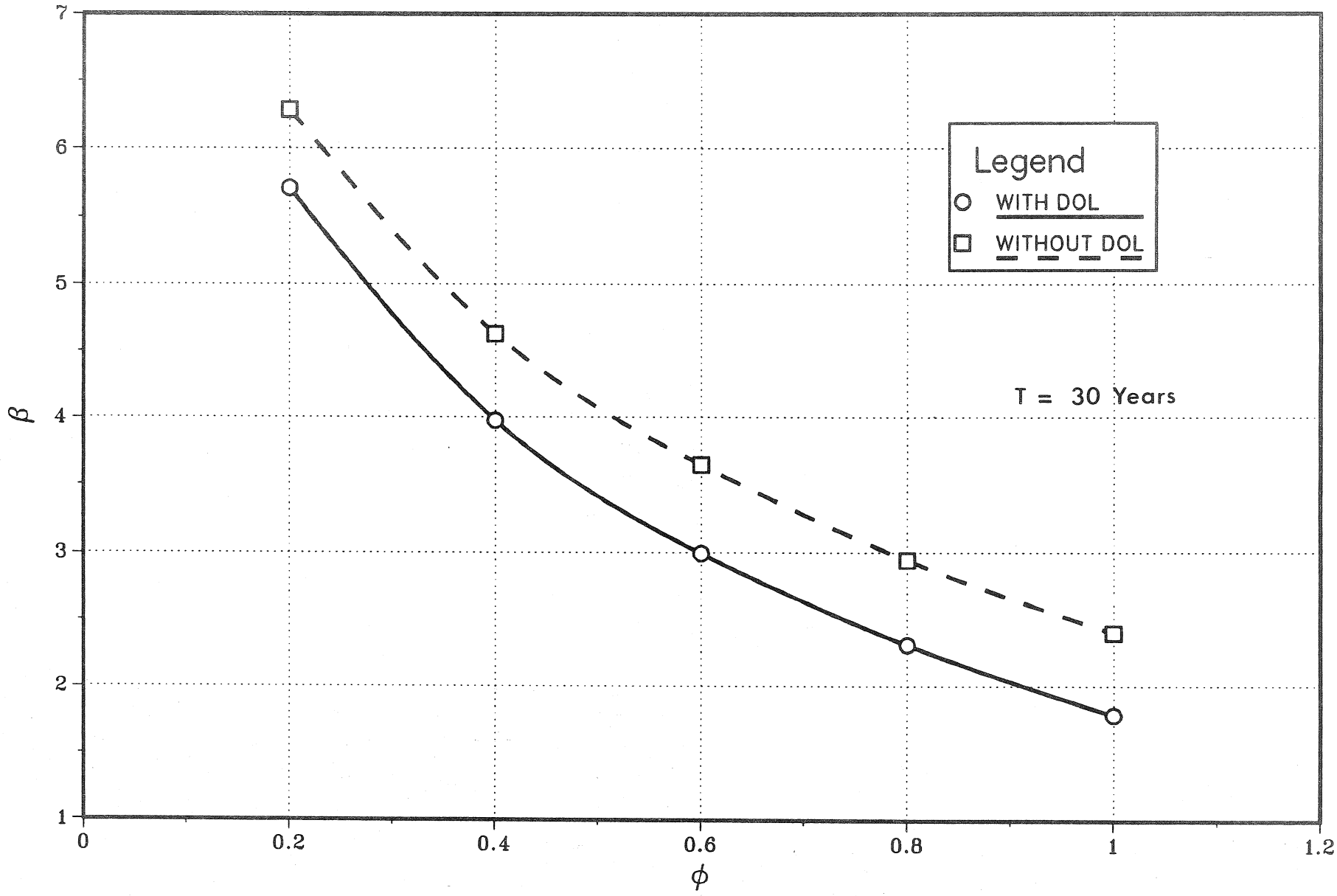


FIGURE 7. Reliability Index $\beta$ , With and Without DOL

TABLE 1

PERFORMANCE AND DURATION OF LOAD ADJUSTMENT FACTORS

AT DIFFERENT TARGET RELIABILITIES

| Target Reliability Index $\beta$ | Dead+30-Year Snow No Duration of Load $\phi$ | Dead+30-Year Snow With Duration of Load $\phi$ | $K_d$ |
|---|---|---|---|
| 4.0 | 0.52 | 0.40 | 0.77 |
| 3.0 | 0.78 | 0.60 | 0.77 |
| 2.5 | 0.95 | 0.73 | 0.77 |

Note: $\gamma = 0.40$ (Design snow load = 2.5 x Design dead load)

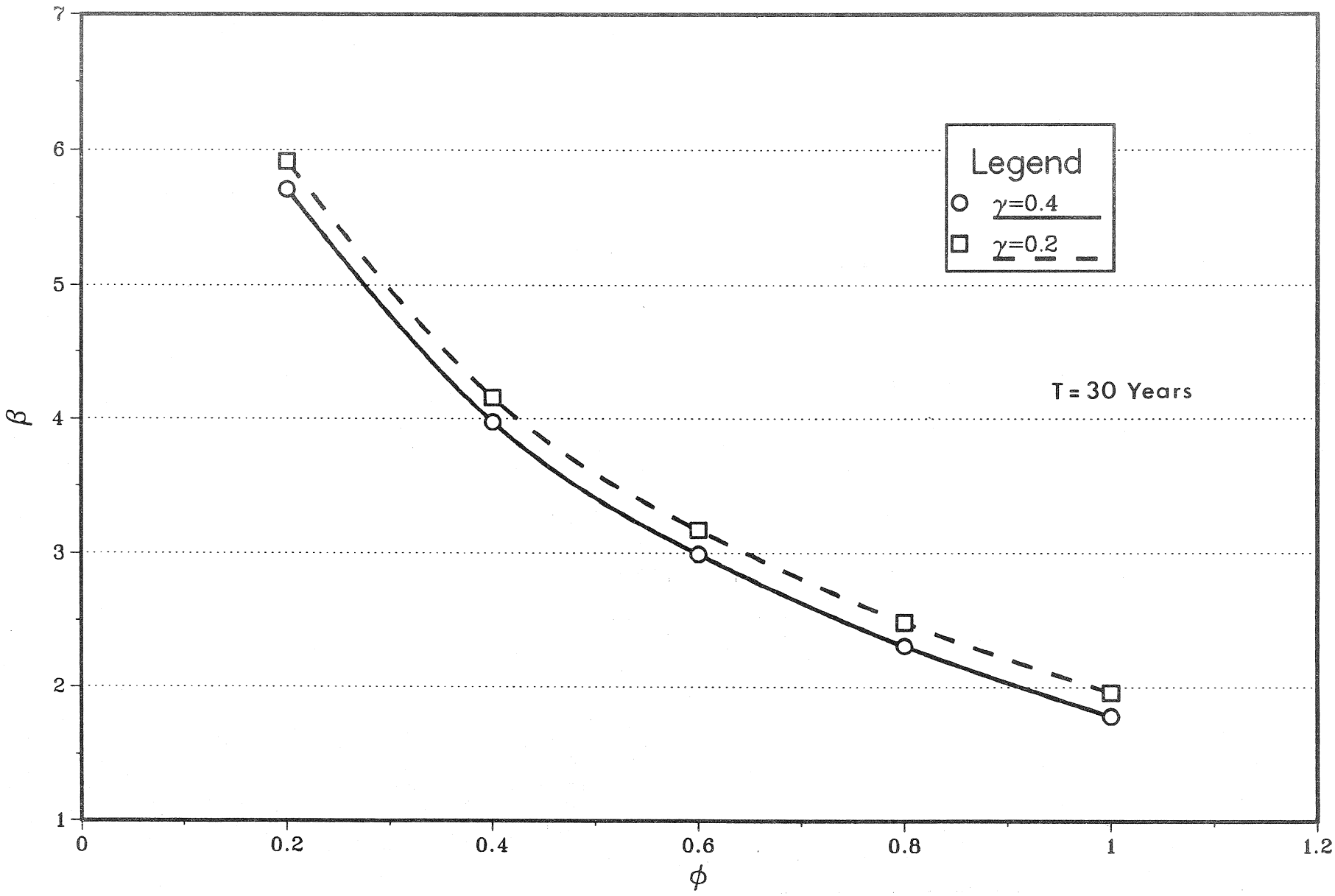


FIGURE 6. Reliability Index $\beta$ (30 Years)

## FURTHER RESEARCH

The methods described in this paper should be investigated for snow loads for other locations and other loadings , particularly occupancy and wind. Further research should also consider the combination of three types of loads, as well as the effect of duration of load in structural members other than bending elements. As already discussed, the extension of these methods to structural systems is of major importance for wood structures, and should receive special attention.

## REFERENCES

Ditlevsen, O. 1979. Narrow Reliability Bounds for Structural Systems. Journal of Engineering Mechanics, ASCE. 7 , pp. 453-472.

Foschi, R.O. 1984. Reliability of Wood Structural Systems. Journal of Structural Engineering, ASCE. 110 (12), pp. 2995-3013.

Foschi, R.O. and Yao, Z.C. 1986. Another Look at Three Duration of Load Models. IUFRO Wood Engineering Group Meeting, Firenze, Italy, Sept. 1-6, 1986.

Madsen, H.O., Krenk, S. and Lind, N.C. 1986. Methods of Structural Safety, Prentice-Hall Inc., N.J, pp. 107-114.

followed by all segment loads of equal but lower magnitude.

The values of $\beta_1$ at 30 years can be computed for different combinations of the ratio $\gamma$ and the performance factor $\phi$ . Fig. 6 shows the effect of these two parameters on the reliability index. A smaller mean dead load increases the reliability ($\gamma = 0.2$) while a larger ratio $\gamma = 0.4$ decreases it. A conservative approximation for code implementation would be to use a reasonably high ratio $\gamma$ (0.4 is the ratio used in the soft calibration of the present Canadian Limit States Design version of the code).

Fig. 7 then shows the relationship between $\beta_1$ and $\phi$ for $\gamma = 0.4$. If a target reliability $\beta = 3.0$ is chosen, the performance factor must be

(27) $$\phi = 0.60$$

Fig. 7 also shows the reliability of the single member if duration of load effects are not taken into account. In this case, the short-term strength distribution of the member is compared with the distribution for the highest load that the member could receive in a 30 year period. The two curves in Fig. 7 show clearly the effect of duration of load on the member's reliability. At the same target reliability $\beta = 3.0$, the performance factor should be

(28) $$\phi = 0.78$$

Thus, the design equation (12) could be written

$$1.25\ D_n + 1.50\ S_n = \phi\ R(0.05)\ K_d \tag{29}$$

where $\phi = 0.78$ should be used if duration of load is ignored,

and $K_d = 0.77$ is a duration of load adjustment factor to reduce the short-term strength for the case of snow plus dead loads over a service life of 30 years.

Table 1 gives performance and duration of load adjustment factors at different target reliabilities. It is apparent that $K_d = 0.77$ could be used regardless of the target selected.

This approximate procedure for the determination of reliability at the end of the intended service life is quick, accurate and will permit code calibration without the demands of Montecarlo simulations. Microcomputer-based programs are currently being developed at U.B.C.

Since the stresses produced by dead or snow loads are proportional to the square of the span, it is seen that the factor $K_d = 0.77$ implies that a reduction factor 0.88 must be applied to the allowable span computed without load duration effects. This 12% reduction in span agrees with previous results from simulations of complete systems (Foschi, 1984).

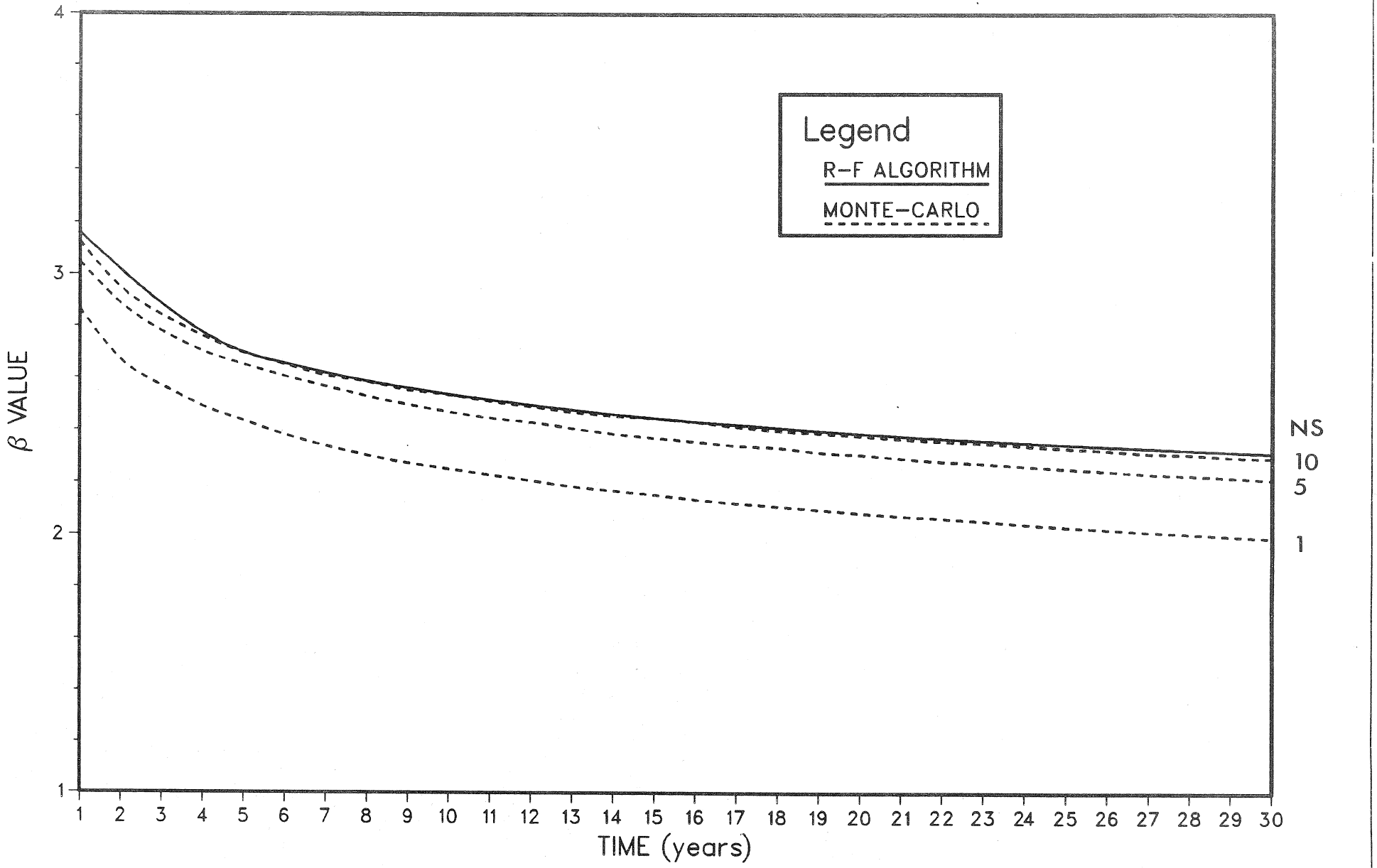


FIGURE 5. Comparison, Montecarlo and RF Algorithm.

(24) $$\Phi(-\beta_1) < P_f[NS = 1]$$

On the other hand, the Montecarlo simulation shows that

(25) $$P_f[NS > 1] < P_f[NS = 1]$$

Thus, it is plausible that a good approximation to $P_f[NS > 1]$ (which is the case of interest) could be found by using

(26) $$P_f[NS > 1] \cong \Phi(-\beta_1)$$

Fig. 5 shows the reliability index $\beta_1$ corresponding to the minimum $\beta$ for NS = 1. It is apparent that this index can be used very accurately to approximate the true reliability for NS = 10, and with somewhat less accuracy for the case of NS = 5. The calculation of $\beta_1$ with the Rackwitz-Fiessler algorithm is very fast, even for 30 years. The convergence to $\beta_1$ is obtained when all segment loads are initially assumed equal to each other. The resulting mode of failure corresponds to a load sequence with the high segment load occurring at the first winter,

service period considered.

The algorithm could converge to any of these modes of failure depending on the initial values given to the intervening variables. Our problem is characterized by (NY x NS) different failure modes (the total number of segments in the NY years). It was found that starting the algorithm with segment loads all equal to each other converges to a situation where the high load segment occurs at the beginning of the period and corresponds to the lowest $\beta$ in the set.

The probability of failure $P_f$ after NY years is the probability content in the failure zone $G < 0$ of Fig. 4. If the surface $G = 0$ were relatively flat around point 1, as shown by the line 1-1 in the figure, $P_f$ could be determined very accurately from Eq.(16) using the reliability index $\beta_1$. Since the surface presents several minima, it is apparent that the true probability of failure is greater than what would be predicted by Eq.(16) and the minimum $\beta_1$. Bounds on the probability of failure could be obtained as discussed by Ditlevsen (1979), a procedure which requires the complete set of minima (Madsen et al., 1986).

## NUMERICAL RESULTS, DESIGN PROCEDURE AND CODE IMPLEMENTATION

As a benchmark, the probability of failure for up to 30 years was studied first by Montecarlo simulation. This was done using a sample size of 100,000 replications, for values of $\gamma = 0.4$ and $\phi = 0.8$. In addition, three number of load segments per year were considered: NS = 1, 5 and 10.

Thus, the snow load was assumed to have a constant value lasting for 5 months, 1 month or 2 weeks. All damage model parameters, as well as the short-term strength, were assumed lognormally distributed.

Fig. 5 shows the results expressed as reliability indeces $\beta$, computed from the inverse of Eq.(16),

$$\beta = -\Phi^{-1}(P_f) \tag{23}$$

Fig. 5 shows that the case of NS = 1 is the most severe, and that the probability of failure decreases when the load segments are of shorter duration. However, since the differences between NS = 5 and NS = 10 are smaller than between NS = 1 and NS = 5, it is expected that a higher NS will give results not too different from NS = 10. This permits to take the results for NS = 10 as a not overly conservative approximation. It should also be mentioned that the calculations are based on the independence of the different load variables, an assumption which will be compromised for higher NS.

Montecarlo simulation is very time consuming and expensive. An alternative procedure, based on the Rackwitz-Fiessler algorithm, would be much faster and desirable. However, one must consider the problem of multiple minima (different failure modes) and the corresponding fact that the probability of failure for the minimum $\beta$ underestimates the actual probability $P_f$. Thus, if $\beta_1$ is the minimum $\beta$ for the case of NS = 1, and $P_f[NS = 1]$ is the probability of failure for NS = 1,

also be computed by a recursive scheme,

$$(21) \qquad \partial\alpha_i / \partial z = \partial\alpha_{i-1} / \partial z \; K_0(i) + \alpha_{i-1} \partial K_0(i) / \partial z + \partial K_1(i) / \partial z$$

$$\text{if} \quad D + S_i > \sigma_o \; \tau_s \text{ , or}$$

$$(22) \qquad \partial\alpha_i / \partial z = \partial\alpha_{i-1} / \partial z \qquad \text{if} \quad D + S_i < \sigma_o \; \tau_s$$

The reliability index $\beta$ is the minimum distance between the origin (mean point) in the normalized space and the failure surface G = 0. The point on the surface corresponding to this minimum distance is called the "design" or "most likely failure" point. Should the surface G = 0 be far from flat in the transformed space, it could exhibit several local minima. This is showm schematically in Fig. 4. Each minima corresponds to a different design point which, in turn, corresponds to a different failure mode. In our case, the different failure modes are different types of load sequences over the NY years. As shown in Fig. 4, all are characterized by the presence of a high load segment with all remaining segments taking on constant load values. The main feature distinguishing a failure mode from another is the timing of the high load segment, which could come at the beginning, at any time in-between or at the end of the

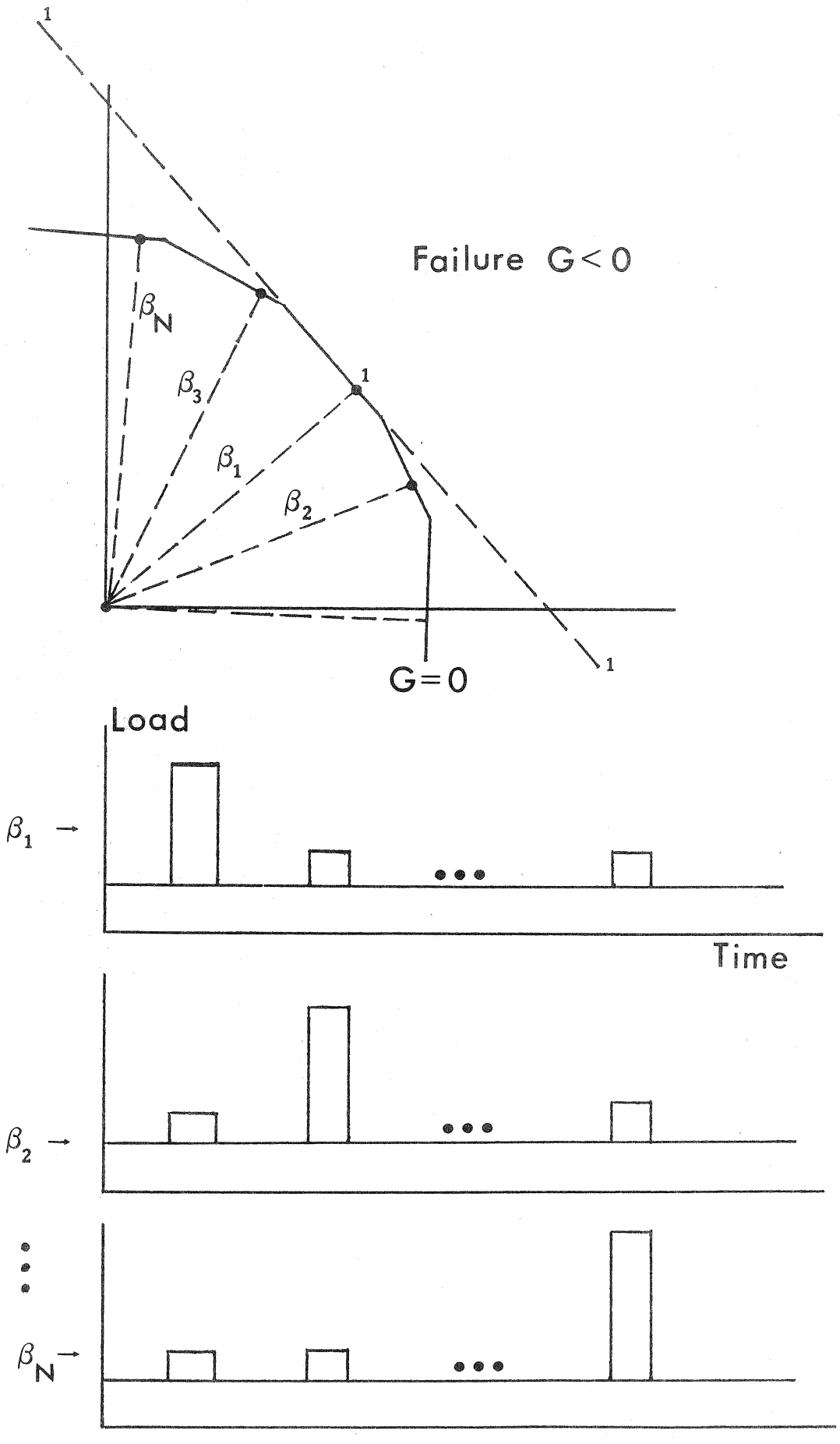


FIGURE 4. Failure Surface and Multiple Minima

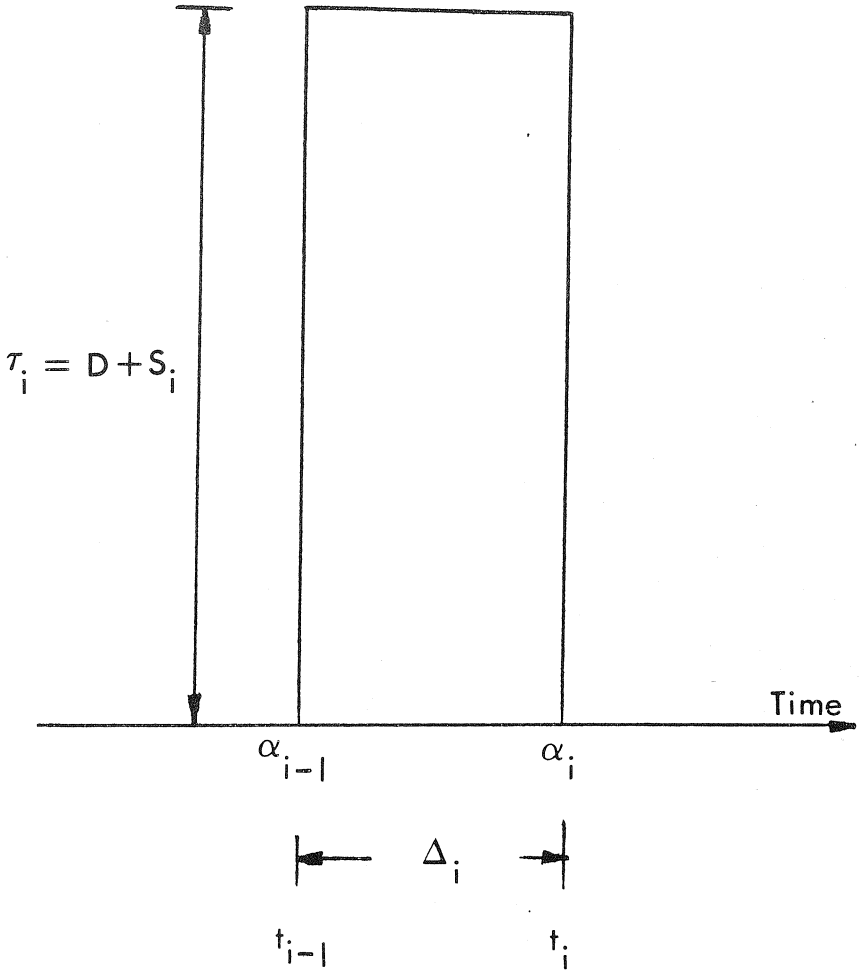


FIGURE 3. Stress Cycle, Damage Accumulation

$$(18)\qquad \begin{cases} \alpha_i = \alpha_{i-1}\, K_0(i) + K_1(i) & \text{if } \tau_i = (D + S_i) > \sigma_o\, \tau_s \\ \alpha_i = \alpha_{i-1} & \text{if } \tau_i = (D + S_i) \le \sigma_o\, \tau_s \end{cases}$$

in which

$$(19)\qquad K_0(i) = e^{c\,[\,\tau_i - \sigma_o\,\tau_s\,]^n\,\Delta_i}$$

$$(20)\qquad K_1(i) = \frac{k\,(b+1)}{c\,[\,\tau_i - \sigma_o\,\tau_s\,]^{(n+1)}} \left( \frac{\tau_i - \sigma_o\,\tau_s}{\tau_s - \sigma_o\,\tau_s} \right)^{(b+1)} (\,K_0(i) - 1\,)$$

where k is the ramp rate used in the determination of the short-term strength $\tau_s$. For each cycle, $D + S_i$ is given by Eq.(14).

Eq.(18) provides a recursive scheme to compute the damage after any number of cycles N. The Rackwitz-Fiessler algorithm also requires the gradient of the failure function $G(b,c,n, \sigma_o, \tau_s, d, x_1, x_2, x_3, \ldots, x_N)$. In general, the partial derivative of G with respect to a variable z can

(13) $$S_n = \phi\, R(0.05) \,/\, (\, 1.25\, \gamma + 1.50\, )$$

which, when introduced in Eq.(10), permits the total segment load to be expressed as

(14) $$D + S = \frac{\phi\, R(0.05)}{1.25\, \gamma + 1.50} \; (\, d\gamma + x\,)$$

During the summer months, of course, x = 0 and only dead load is present.

DAMAGE ACCUMULATION, FAILURE FUNCTION AND RELIABILITY ANALYSIS

If $\alpha(t)$ is the damage accumulated by the load sequence up to time t, failure will take place if $\alpha(t) = 1$ (Foschi and Yao, 1986). Thus, the failure function G used in the reliability analysis may be written

(15) $$G = 1 - \alpha$$

with G = 0 representing the failure surface.

The probability of failure at time t will be the probability that

$G < 0$. This probability $P_f(t)$ can be evaluated via the reliability index $\beta$, computed with the Rackwitz-Fiessler algorithm in a transformed space of standard, normally distributed, uncorrelated variables. Thus,

$$P_f(t) = \Phi(-\beta) \tag{16}$$

where $\Phi$ is the standard normal distribution function.

The damage accumulation model prescribes the rate of growth in damage $\alpha$ as a function of the stress level $\tau(t)$ and the already accumulated damage:

$$d\alpha/dt = a\,[\,\tau(t) - \sigma_o\,\tau_s\,]^b + c\,[\,\tau(t) - \sigma_o\,\tau_s\,]^n\,\alpha \tag{17}$$

where $\tau_s$ is the short-term strength; a, b, c and n are model parameters which vary across members, and $\sigma_o$ is a threshold stress ratio. The applied stress $\tau(t)$ must exceed the threshold stress $\sigma_o\,\tau_s$ for damage to accumulate. As shown by Foschi and Yao (1986), the parameter a can be expressed in terms of the short-term strength $\tau_s$ and the remaining parameters in the model.

Consider now the constant load cycle of Fig. 3. The applied stress during the cycle is $(D + S_i)$ and the duration is $\Delta_i$. The damage at the beginning of the cycle is $\alpha_{i-1}$ and the damage at the end is $\alpha_i$. Integration of Eq.(17) allows the calculation of the damage $\alpha_i$ as follows:

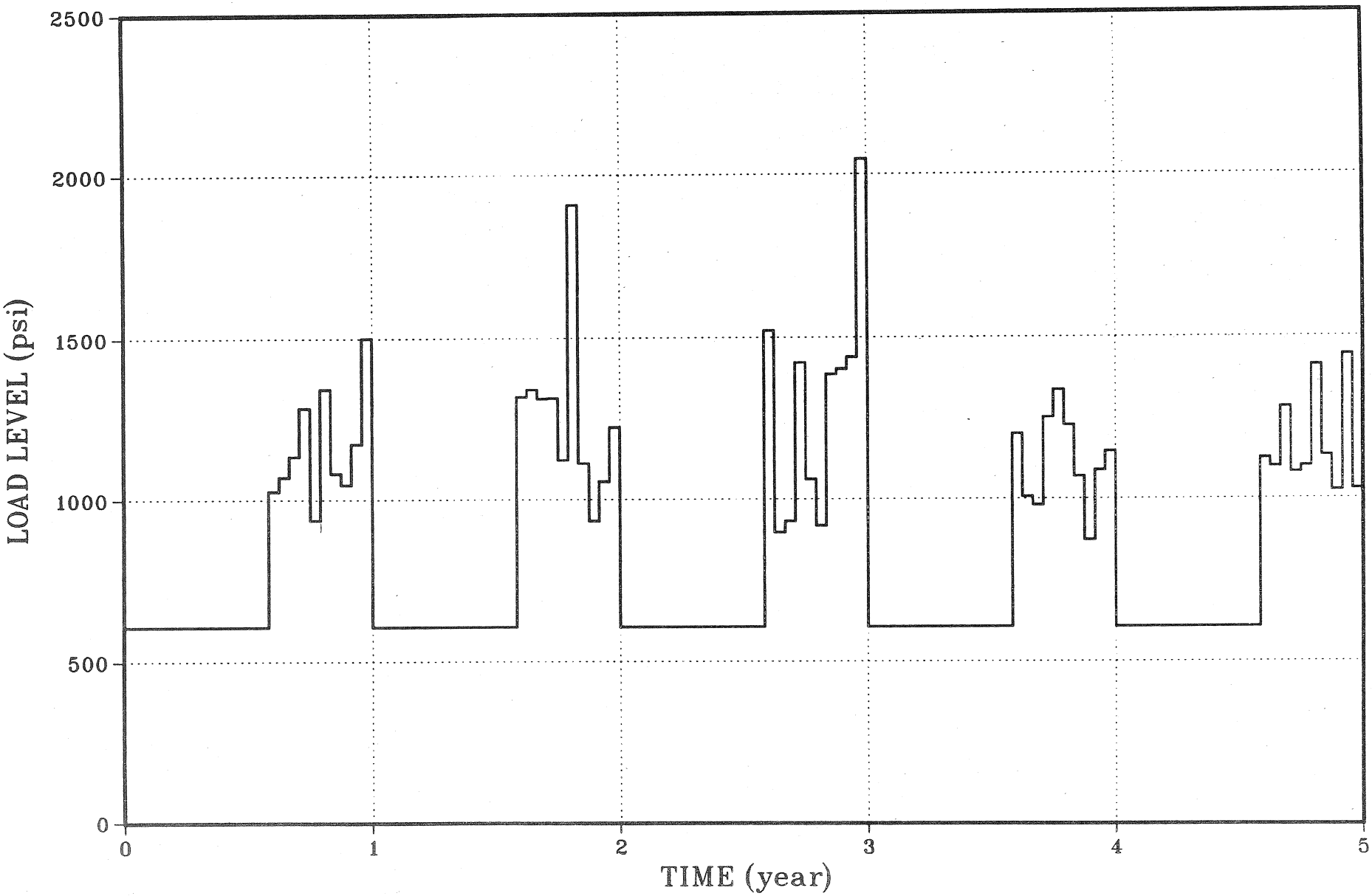


FIGURE 2. Load History (NS = 10)

This can be written in terms of the ratios x and d as follows:

(10) $$D + S = S_n ( d \gamma + x )$$

where $\gamma$ is the ratio of design dead load to design live load,

(11) $$\gamma = D_n / S_n$$

THE RELIABILITY-BASED DESIGN EQUATION

The design equation used in the Canadian code CAN3-086.1-84 has the following form,

(12) $$\alpha_d Dn + \alpha_s S_n = \phi R(0.05)$$

where $\alpha_d$ and $\alpha_s$ are the load factors corresponding, respectively, to dead and live loads, and $\phi$ is the performance factor applied to the characteristic strength R(0.05). The latter is taken to be the 5th-percentile of the short-term strength distribution. The load factors are common to all materials, and are fixed at $\alpha_d = 1.25$ and $\alpha_s = 1.50$.

Assuming that this equation is satisfied, the design live load $S_n$ can be written

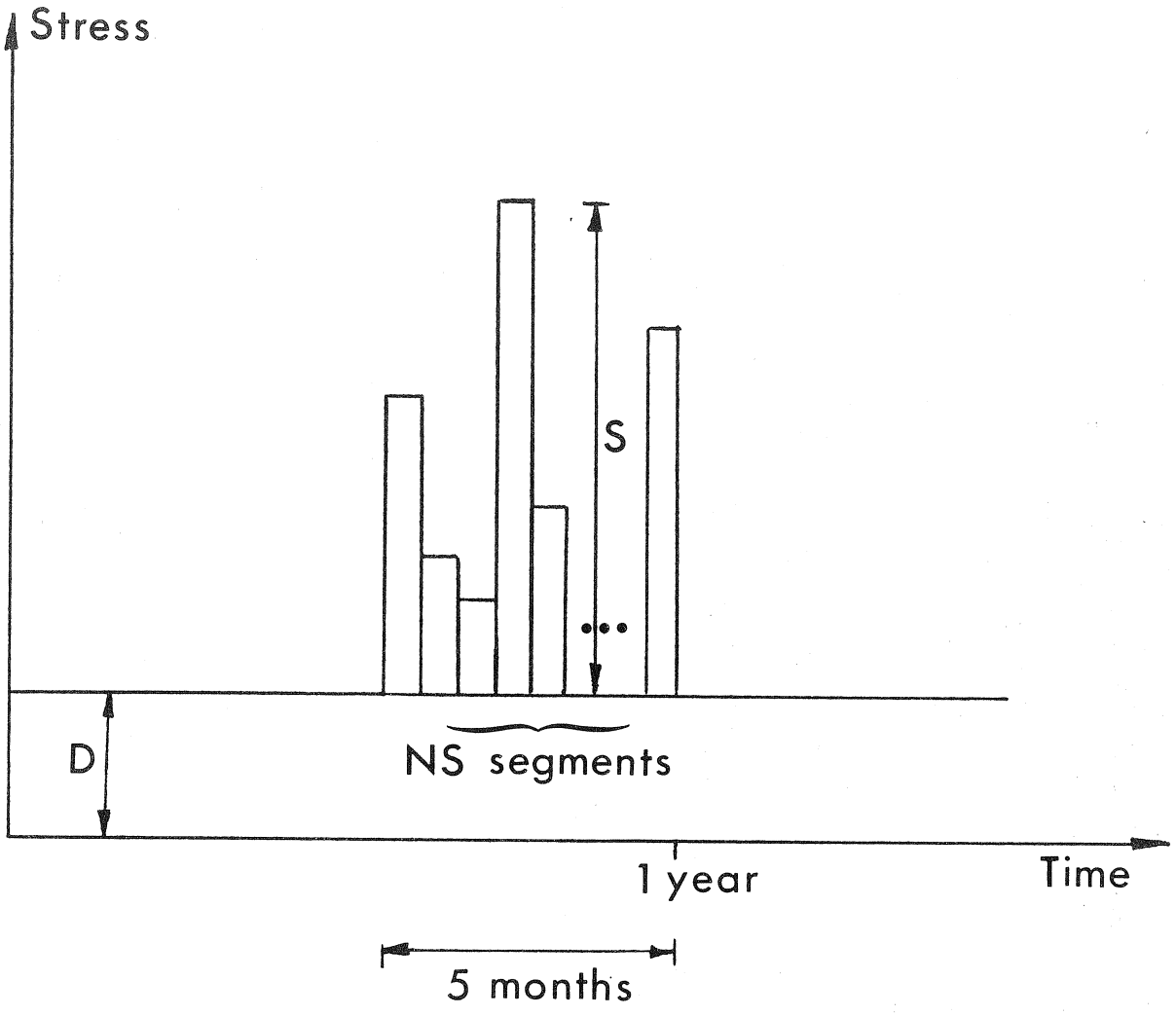


FIGURE 1. Dead and Snow Load Representation

$$(7) \qquad S = U + \left( -\ln\{-NS \ln[(1 - p_e) + p_e\, p]\} \right) / C$$

and the distribution of the ratio x of the segment load S to the design load $S_n$ becomes

$$(8) \qquad S/S_n = x = \frac{CU + \left( -\ln\{-NS \ln[(1 - p_e) + p_e\, p]\} \right)}{CU + 3.3843}$$

where p is a random variable uniformly distributed between 0 and 1.

The dead load D may be assumed normally distributed with coefficient of variation $C_D$. If the design dead load $D_n$ is taken equal to the mean value, the ratio d of the dead load to the design dead load is given by

$$(9) \qquad D/D_n = d = 1.0 + C_D\, p_n$$

where $p_n$ is a standard normal random variable.

A load sequence for NY years, with NS load segments per winter, will then contain (NY x NS + 1) independent random variables: (NY x NS) live load variables x plus the dead load ratio d. Fig. 2 shows a typical load sequence for NY = 5 and NS = 10.

The load at any segment during the winter will be the sum D + S.

maximum annual load S is distributed according to

(1) $$S = U + [-\ln(-\ln p)]/C$$

or

(2) $$F_{max}(S) = \exp(-\exp(-C(S-U)))$$

where p is a random number uniformly distributed between 0 and 1, and U and C are distribution parameters. For Quebec City,

(3) $$U = 1.882 \text{ kN/m}^2, \qquad C = 2.923 \text{ (kN/m}^2\text{)}^{-1}$$

A snow design load $S_n$ is chosen for a 30-year return period, corresponding to a probability p = 29/30. Thus, the ratio of $S/S_n$ of annual maximum to design load is also Gumbel-distributed according to

(4) $$S/S_n = U^* + [-\ln(-\ln p)] / C^*$$

where

$$U^* = \frac{CU}{CU + 3.3843} \quad ; \quad C^* = \frac{1}{CU + 3.3843}$$

Using Eqs.(1) and (3), the probability $p_o$ corresponding to no snow in one year is obtained for S = 0. In the case of Quebec, $p_o$ is very small and can be taken $p_o = 0$.

In general, the duration of the maximum annual load is not known, but the duration of the winter may be assumed to be 5 months (November 1 - April 1). Let us also assume that the annual load comes in NS segments of equal duration, and that within each segment the load remains constant. This is shown in Fig. 1. The segment loads are assumed to be independent of each other and equally distributed. For consistency, this distribution must be such that the distribution for the maximum of the NS segment loads equals that for the annual maximum load. Thus, if F(S) is the segment load distribution, and $p_e$ is the probability of snow in a segment,

$$F_{max}(S) = [(1 - p_e) + p_e F(S)]^{NS} \tag{5}$$

where $p_e$ must satisfy

$$(1 - p_e)^{NS} = p_o \tag{6}$$

Introducing Eq.(2) into Eq.(5), the distribution of the segment load S is found to be

## INTRODUCTION

The introduction of reliability-based design in wood structures requires consideration of the effects that load duration has on degradation of strength over time.

Normally, when no duration of load effects are present (as in the case of steel structures), the estimation of reliability over the service life requires only probabilistic information on the material's short-term strength and on the maximum load which the structure would receive over the life period considered.

When strength degradation is present, the reliability estimation is complicated by the fact that load history must be taken into account, considering not only load magnitudes but also the duration of each load period.

Of course, central to the solution of the problem is the availability of a degradation or "duration of load" model which would allow the estimation of the degradation effect for any load sequence. The authors, in a separate paper, discuss different duration of load models, their relative advantages and shortcomings, and their ability to represent experimental trends for constant loads (Foschi and Yao, 1986).

A second consideration in reliability estimation is the procedure chosen for the calculations. Simulation is a straightforward procedure which can account for the variability in the material as well as the possible loading sequences. This procedure, however, is normally tedious and expensive. Calculation of reliability indeces based on algorithms like Rackwitz-Fiessler's should be preferred as they are much faster

and, in general, equally accurate (Madsen et al., 1986). However, application of such algorithm presents special problems in the case of interaction between strength and load sequence.

Finally, reliability calculations for wood structures must take into account the behaviour of the structural system rather than only that of a single member.In fact, the usually high variability in single member properties is compensanted by the action of a redundant system, and consideration of such action is the only way in which a realistic reliability assessment can be made for structural applications of wood. An example of reliability estimations for timber systems has been presented by Foschi (1984). Nevertheless, many codes are based on "single member" design, with "load sharing" factors applied to take into account the added reliability of a system. In this context, reliability of single members is a first step in the consideration of the more general problem.

The objective of this paper is the discussion of single member reliability in bending, using the Canadian damage accumulation model (Foschi and Yao, 1986), and the development of techniques based on the Rackwitz-Fiessler algorithm for the reliability index $\beta$.

## THE LOAD SEQUENCE

This paper will consider the superposition of dead and live (snow) loads. The probabilistic information normally available for snow loads is the distribution of annual maximum, and this can be represented by an Extreme Type I distribution (Gumbel). In the case of Quebec City, the

CIB-W18/19-1-1

INTERNATIONAL COUNCIL FOR BUILDING RESEARCH STUDIES AND DOCUMENTATION

WORKING COMMISSION W18 - TIMBER STRUCTURES

# DURATION OF LOAD EFFECTS AND RELIABILITY BASED DESIGN (SINGLE MEMBER)

by

R O Foschi and Z C Yao
University of British Columbia
Canada

MEETING NINETEEN
FLORENCE
ITALY
SEPTEMBER 1986

# DURATION OF LOAD EFFECTS AND RELIABILITY BASED DESIGN (SINGLE MEMBER)

by

Ricardo O. Foschi* and Z. C. Yao**

IUFRO Wood Engineering Group Meeting, Sept. 1-6, 1986, Firenze, Italy.

*Professor and **Graduate Research Assistant, Department of Civil Engineering, Univ. of British Columbia, Vancouver, B.C., Canada V6T 1W5

This research was supported by Operating Grant A5882 to the first author from the National Sciences and Engineering Research Council of Canada, which provided a Graduate Research Assistanship to the second author.

11-102-1 Eurocodes - H J Larsen

13-102-1 Program of Standardisation Work Involving Timber Structures and Wood-Based Products in Poland

17-102-1 Safety Principles - H J Larsen and H Riberholt

17-102-2 Partial Coefficients Limit States Design Codes for Structural Timberwork - I Smith

18-102-1 Antiseismic Rules for Timber Structures: an Italian Proposal - G Augusti and A Ceccotti

18-1-2 Eurocode 5, Timber Structures - H J Larsen

19-102-1 Eurocode 5 - Requirements to Timber - Drafting Panel Eurocode 5

19-102-2 Eurocode 5 and CIB Structural Timber Design Code - H J Larsen

19-102-3 Comments on the Format of Eurocode 5 - A R Fewell

19-102-4 New Developments of Limit States Design for the New GDR Timber Design Code - W Rug and M Badstube

19-7-3 Effectiveness of Multiple Fastener Joints According to National Codes and Eurocode 5 (Draft) - G Steck

19-7-6 The Derivation of Design Clauses for Nailed and Bolted Joints in Eurocode 5 - L R J Whale and I Smith

19-14-1 Annex on Simplified Design of W-Trusses - H J Larsen

INTERNATIONAL STANDARDS ORGANISATION

3-103-1 Method for the Preparation of Standards Concerning the Safety of Structures (ISO/DIS 3250) - International Standards Organisation ISO/TC98

4-103-1 A Proposal for Undertaking the Preparation of an International Standard on Timber Structures - International Standards Organisation

5-103-1 Comments on the Report of the Consultion with Member Bodies Concerning ISO/TC/P129 - Timber Structures - Dansk Ingeniorforening

7-103-1 ISO Technical Committees and Membership of ISO/TC 165

8-103-1 Draft Resolutions of ISO/TC 165

12-103-1 ISO/TC 165 Ottawa, September 1979

13-103-1 Report from ISO/TC 165 - A Sorensen

14-103-1 Comments on ISO/TC 165 N52 "Timber Structures; Solid Timber in Structural Sizes; Determination of Some Physical and Mechanical Properties"

14-103-2 Comments on the CIB Structural Timber Design Code - R H Leicester

JOINT COMMITTEE ON STRUCTURAL SAFETY

3-104-1 International System on Unified Standard Codes of Practice for Structures - Comité Européen du Béton (CEB)

7-104-1 Volume 1: Common Unified Rules for Different Types of Construction and Material - CEB

CIB PROGRAMME, POLICY AND MEETINGS

1-105-1 A Note on International Organisations Active in the Field of Utilisation of Timber - P Sonnemans

5-105-1 The Work and Objectives of CIB-W18-Timber Structures - J G Sunley

10-105-1 The Work of CIB-W18 Timber Structures - J G Sunley

15-105-1 Terms of Reference for Timber - Framed Housing Sub-Group of CIB-W18

19-105-1 Tropical and Hardwood Timbers Structures - R H Leicester

INTERNATIONAL UNION OF FORESTRY RESEARCH ORGANISATIONS

7-106-1 Time and Moisture Effects - CIB W18/IUFRO 55.02-03 Working Party

CIB TIMBER CODE

2-100-1 A Framework for the Production of an International Code of Practice for the Structural Use of Timber - W T Curry

5-100-1 Design of Solid Timber Columns (First Draft) - H J Larsen

5-100-2 A Draft Outline of a Code for Timber Structures - L G Booth

6-100-1 Comments on Document 5-100-1; Design of Solid Timber Columns - H J Larsen and E Theilgaard

6-100-2 CIB Timber Code: CIB Timber Standards - H J Larsen and E Theilgaard

7-100-1 CIB Timber Code Chapter 5.3 Mechanical Fasteners; CIB Timber Standard 06 and 07 - H J Larsen

8-100-1 CIB Timber Code - List of Contents (Second Draft) - H J Larsen

9-100-1 The CIB Timber Code (Second Draft)

11-100-1 CIB Structural Timber Design Code (Third Draft)

11-100-2 Comments Received on the CIB Code

a U Saarelainen
b Y M Ivanov
c R H Leicester
d W Nozynski
e W R A Meyer
f P Beckmann; R Marsh
g W R A Meyer
h W R A Meyer

11-100-3 CIB Structural Timber Design Code; Chapter 3 - H J Larsen

12-100-1 Comment on the CIB Code - Sous-Commission Glulam

12-100-2 Comment on the CIB Code - R H Leicester

12-100-3 CIB Structural Timber Design Code (Fourth Draft)

13-100-1 Agreed Changes to CIB Structural Timber Design Code

13-100-2 CIB Structural Timber Design Code. Chapter 9: Performance in Fire

13-100-3a Comments on CIB Structural Timber Design Code

13-100-3b Comments on CIB Structural Timber Design Code - W R A Meyer

13-100-3c Comments on CIB Structural Timber Design Code - British Standards Institution

13-100-4 CIB Structural Timber Design Code. Proposal for Section 6.1.5 Nail Plates - N I Bovim

14-103-2 Comments on the CIB Structural Timber Design Code - R H Leicester

15-103-1 Resolutions of TC 165-meeting in Athens 1981-10-12/13

LOADING CODES

4-101-1 Loading Regulations - Nordic Committee for Building Regulations

4-101-2 Comments on the Loading Regulations - Nordic Committee for Building Regulations

STRUCTURAL DESIGN CODES

1-102-1 Survey of Status of Building Codes, Specifications etc., in USA - E G Stern

1-102-2 Australian Codes for Use of Timber in Structures - R H Leicester

1-102-3 Contemporary Concepts for Structural Timber Codes - R H Leicester

1-102-4 Revision of CP 112 - First Draft, July 1972 - British Standards Institution

4-102-1 Comparsion of Codes and Safety Requirements for Timber Structures in EEC Countries - Timber Research and Development Association

4-102-2 Nordic Proposals for Safety Code for Structures and Loading Code for Design of Structures - O A Brynildsen

4-102-3 Proposal for Safety Codes for Load-Carrying Structures - Nordic Committee for Building Regulations

4-102-4 Comments to Proposal for Safety Codes for Load-Carrying Structures - Nordic Committee for Building Regulations

4-102-5 Extract from Norwegian Standard NS 3470 "Timber Structures"

4-102-6 Draft for Revision of CP 112 "The Structural Use of Timber" - W T Curry

8-102-1 Polish Standard PN-73/B-03150: Timber Structures; Statistical Calculations and Designing

8-102-2 The Russian Timber Code: Summary of Contents

9-102-1 Svensk Byggnorm 1975 (2nd Edition); Chapter 27: Timber Construction

15-14-3 Bracing Calculations for Trussed Rafter Roofs - H J Burgess

15-14-4 The Design of Continuous Members in Timber Trussed Rafters with Punched Metal Connector Plates - P O Reece

15-14-5 A Rafter Design Method Matching U.K. Test Results for Trussed Rafters - H J Burgess

16-14-1 Full-Scale Tests on Timber Fink Trusses Made from Irish Grown Sitka Spruce - V Picardo

17-14-1 Data from Full Scale Tests on Prefabricated Trussed Rafters - V Picardo

17-14-2 Simplified Static Analysis and Dimensioning of Trussed Rafters - H Riberholt

17-14-3 Simplified Calculation Method for W-Trusses - B Källsner

18-14-1 Simplified Calculation Method for W-Trusses (Part 2) - B Källsner

18-14-2 Model for Trussed Rafter Design - T Poutanen

19-14-1 Annex on Simplified Design of W-Trusses - H J Larsen

19-14-2 Simplified Static Analysis and Dimensioning of Trussed Rafters - Part 2 - H Riberholt

19-14-3 Joint Eccentricity in Trussed Rafters - T Poutanen

STRUCTURAL STABILITY

8-15-1 Laterally Loaded Timber Columns: Tests and Theory - H J Larsen

13-15-1 Timber and Wood-Based Products Structures. Panels for Roof Coverings. Methods of Testing and Strength Assessment Criteria. Polish Standard BN-78/7159-03

16-15-1 Determination of Bracing Structures for Compression Members and Beams - H Brüninghoff

17-15-1 Proposal for Chapter 7.4 Bracing - H Brüninghoff

17-15-2 Seismic Design of Small Wood Framed Houses - K F Hansen

18-15-1 Full-Scale Structures in Glued Laminated Timber, Dynamic Tests: Theoretical and Experimental Studies - A Ceccotti and A Vignoli

18-15-2 Stabilizing Bracings - H Brüninghoff

19-15-1 Connections Deformability in Timber Structures: a Theoretical Evaluation of its Influence on Seismic Effects - A Ceccotti and A Vignoli

19-15-2 The Bracing of Trussed Beams - M H Kessel and J Natterer

19-15-3 Racking Resistance of Wooden Frame Walls with Various Openings - M Yasumura

19-15-4 Some Experiences of Restoration of Timber Structures for Country Buildings - G Cardinale and P Spinelli

19-15-5 Non-Destructive Vibration Tests on Existing Wooden Dwellings - Y Hirashima

FIRE

12-16-1 British Standard BS 5268 the Structural Use of Timber: Part 4 Fire Resistance of Timber Structures

13-100-2 CIB Structural Timber Design Code. Chapter 9. Performance in Fire

19-16-1 Simulation of Fire in Tests of Axially Loaded Wood Wall Studs - J König

STATISTICS AND DATA ANALYSIS

13-17-1 On Testing Whether a Prescribed Exclusion Limit is Attained - W G Warren

16-17-1 Notes on Sampling and Strength Prediction of Stress Graded Structural Timber - P Glos

16-17-2 Sampling to Predict by Testing the Capacity of Joints, Components and Structures - B Norên

16-17-3 Discussion of Sampling and Analysis Procedures - P W Post

17-17-1 Sampling of Wood for Joint Tests on the Basis of Density - I Smith, L R J Whale

17-17-2 Sampling Strategy for Physical and Mechanical Properties of Irish Grown Sitka Spruce - V Picardo

18-17-1 Sampling of Timber in Structural Sizes - P Glos

18-6-3 Notes on Sampling Factors for Characteristic Values - R H Leicester

19-17-1 Load Factors for Proof and Prototype Testing - R H Leicester

19-6-2 Confidence in Estimates of Characteristic Values - R H Leicester

11-6-3 Consideration of Combined Stresses for Lumber and Glued Laminated Timber (addition to Paper CIB-W18/9-6-4) - K Möhler

12-12-1 Glulam Standard Part 2: Glued Timber Structures; Rating (3rd draft)

12-12-2 Glulam Standard Part 3: Glued Timber Structures; Performance (3rd draft)

13-12-1 Glulam Standard Part 3: Glued Timber Structures; Performance (4th draft)

14-12-1 Proposals for CEI-Bois/CIB-W18 Glulam Standards - H J Larsen

14-12-2 Guidelines for the Manufacturing of Glued Load-Bearing Timber Structures - Stevin Laboratory

14-12-3 Double Tapered Curved Glulam Beams - H Riberholt

14-12-4 Comment on CIB-W18/14-12-3 - E Gehri

18-12-1 Report on European Glulam Control and Production Standard - H Riberholt

18-10-2 Longitudinal Shear Design of Glued Laminated Beams - R O Foschi

19-12-1 Strength of Glued Laminated Timber - J Ehlbeck and F Colling

19-12-2 Strength Model for Glulam Columns - H J Blaß

19-12-3 Influence of Volume and Stress Distribution on the Shear Strength and Tensile Strength Perpendicular to Grain - F Colling

19-12-4 Time-Dependent Behaviour of Glued-Laminated Beams - F Zaupa

PARTICLE AND FIBRE BUILDING BOARDS

7-13-1 Fibre Building Boards for CIB Timber Code (First Draft) - O Brynildsen

9-13-1 Determination of the Bearing Strength and the Load-Deformation Characteristics of Particleboard - K Möhler, T Budianto and J Ehlbeck

9-13-2 The Structural Use of Tempered Hardboard - W W L Chan

11-13-1 Tests on Laminated Beams from Hardboard under Short- and Longterm Load - W Nozynski

11-13-2 Determination of Deformation of Special Densified Hardboard under Long-term Load and Varying Temperature and Humidity Conditions - W Halfar

11-13-3 Determination of Deformation of Hardboard under Long-term Load in Changing Climate - W Halfar

14-4-1 An Introduction to Performance Standards for Wood-Base Panel Products - D H Brown

14-4-2 Proposal for Presenting Data on the Properties of Structural Panels - T Schmidt

16-13-1 Effect of Test Piece Size on Panel Bending Properties - P W Post

TRUSSED RAFTERS

4-9-1 Long-term Loading of Trussed Rafters with Different Connection Systems - T Feldborg and M Johansen

6-9-3 Deflection of Trussed Rafters under Alternating Loading During a Year - T Feldborg and M Johansen

7-2-1 Lateral Bracing of Timber Struts - J A Simon

9-14-1 Timber Trusses - Code Related Problems - T F Williams

9-7-1 Design of Truss Plate Joints - F J Keenan

10-14-1 Design of Roof Bracing - The State of the Art in South Africa - P A V Bryant and J A Simon

11-14-1 Design of Metal Plate Connected Wood Trusses - A R Egerup

12-14-1 A Simple Design Method for Standard Trusses - A R Egerup

13-14-1 Truss Design Method for CIB Timber Code- A R Egerup

13-14-2 Trussed Rafters, Static Models - H Riberholt

13-14-3 Comparison of 3 Truss Models Designed by Different Assumptions for Slip and E-Modulus - K Möhler

14-14-1 Wood Trussed Rafter Design - T Feldborg and M Johansen

14-14-2 Truss-Plate Modelling in the Analysis of Trusses - R O Foschi

14-14-3 Cantilevered Timber Trusses - A R Egerup

14-7-5 The Effect of Support Eccentricity on the Design of W- and WW-Trusses with Nail Plate Connectors - B Källsner

15-14-1 Guidelines for Static Models of Trussed Rafters - H Riberholt

15-14-2 The Influence of Various Factors on the Accuracy of the Structural Analysis of Timber Roof Trusses - F R P Pienaar

6-9-2 Long Term Loading - K Möhler

6-9-3 Deflection of Trussed Rafters under Alternating Loading during a Year - T Feldborg and M Johansen

7-6-1 Strength and Long-Term Behaviour of Lumber and Glued-Laminated Timber under Torsion Loads - K Möhler

7-9-1 Code Rules Concerning Strength and Loading Time - H J Larsen and E Theilgaard

17-9-1 On the Long-Term Carrying Capacity of Wood Structures - Y M Ivanov and Y Y Slavic

18-9-1 Prediction of Creep Deformations of Joints - J Kuipers

19-9-1 Another Look at Three Duration of Load Models - R O Foschi and Z C Yao

19-9-2 Duration of Load Effects for Spruce Timber with Special Reference to Moisture Influence - A Status Report - P Hoffmeyer

19-9-3 A Model of Deformation and Damage Processes Based on the Reaction Kinetics of Bond Exchange - T A C M van der Put

19-9-4 Non-Linear Creep Superposition - U Korin

19-9-5 Determination of Creep Data for the Component Parts of Stressed-Skin Panels - R Kliger

19-9-6 Creep and Lifetime of Timber Loaded in Tension and Compression - P Glos

19-1-1 Duration of Load Effects and Reliability Based Design (Single Member) - R O Foschi and Z C Yao

19-6-1 Effect of Age and/or Load on Timber Strength - J Kuipers

19-7-4 The Prediction of the Long-Term Load Carrying Capacity of Joints in Wood Structures - Y M Ivanov and Y Y Slavic

19-7-5 Slip in Joints under Long-Term Loading - T Feldborg and M Johansen

TIMBER BEAMS

4-10-1 The Design of Simple Beams - H J Burgess

4-10-2 Calculation of Timber Beams Subjected to Bending and Normal Force - H J Larsen

5-10-1 The Design of Timber Beams - H J Larsen

9-10-1 The Distribution of Shear Stresses in Timber Beams - F J Keenan

9-10-2 Beams Notched at the Ends - K Möhler

11-10-1 Tapered Timber Beams - H Riberholt

13-6-2 Consideration of Size Effects in Longitudinal Shear Strength for Uncracked Beams - R O Foschi and J D Barrett

13-6-3 Consideration of Shear Strength on End-Cracked Beams - J D Barrett and R O Foschi

18-10-1 Submission to the CIB-W18 Committee on the Design of Ply Web Beams by Consideration of the Type of Stress in the Flanges - J A Baird

18-10-2 Longitudinal Shear Design of Glued Laminated Beams - R O Foschi

19-10-1 Possible Code Approaches to Lateral Buckling in Beams - H J Burgess

19-2-1 Creep Buckling Strength of Timber Beams and Columns - R H Leicester

ENVIRONMENTAL CONDITIONS

5-11-1 Climate Grading for the Code of Practice - B Norén

6-11-1 Climate Grading (2) - B Norén

9-11-1 Climate Classes for Timber Design - F J Keenan

19-11-1 Experimental Analysis on Ancient Downgraded Timber Structures - B Leggeri and L Paolini

19-6-5 Drying Stresses in Round Timber - A Ranta-Maunus

LAMINATED MEMBERS

6-12-1 Directives for the Fabrication of Load-Bearing Structures of Glued Timber - A van der Velden and J Kuipers

8-12-1 Testing of Big Glulam Timber Beams - H Kolb and P Frech

8-12-2 Instruction for the Reinforcement of Apertures in Glulam Beams - H Kolb and P Frech

8-12-3 Glulam Standard Part 1: Glued Timber Structures; Requirements for Timber (Second Draft)

9-12-1 Experiments to Provide for Elevated Forces at the Supports of Wooden Beams with Particular Regard to Shearing Stresses and Long-term Loadings - F Wassipaul and R Lackner

9-12-2 Two Laminated Timber Arch Railway Bridges Built in Perth in 1849 - L G Booth

9-6-4 Consideration of Combined Stresses for Lumber and Glued Laminated Timber - K Möhler

14-7-2 Method of Testing Nails in Wood (second draft, August 1980) - B Norén

14-7-3 Load-Slip Relationship of Nailed Joints - J Ehlbeck and H J Larsen

14-7-4 Wood Failure in Joints with Nail Plates - B Norén

14-7-5 The Effect of Support Eccentricity on the Design of W- and WW-Trusses with Nail Plate Connectors - B Källsner

14-7-6 Derivation of the Allowable Load in Case of Nail Plate Joints Perpendicular to Grain - K Möhler

14-7-7 Comments on CIB-W18/14-7-1 - T A C M van der Put

15-7-1 Final Recommendation TT-1A: Testing Methods for Joints with Mechanical Fasteners in Load-Bearing Timber Structures. Annex A Punched Metal Plate Fasteners - Joint Committee RILEM/CIB-3TT

16-7-1 Load Carrying Capacity of Dowels - E Gehri

16-7-2 Bolted Timber Joints: a Literature Survey - N Harding

16-7-3 Bolted Timber Joints: Practical Aspects of Construction and Design; a Survey - N Harding

16-7-4 Bolted Timber Joints: Draft Experimental Work Plan - Building Research Association of New Zealand

17-7-1 Mechanical Properties of Nails and their Influence on Mechanical Properties of Nailed Timber Joints Subjected to Lateral Loads - I Smith, L R J Whale, C Anderson and L Held

17-7-2 Notes on the Effective Number of Dowels and Nails in Timber Joints - G Steck

18-7-1 Model Specification for Driven Fasteners for Assembly of Pallets and Related Structures - E G Stern and W B Wallin

18-7-2 The Influence of the Orientation of Mechanical Joints on their Mechanical Properties - I Smith and L R J Whale

18-7-3 Influence of Number of Rows of Fasteners or Connectors upon the Ultimate Capacity of Axially Loaded Timber Joints - I Smith and G Steck

18-7-4 A Detailed Testing Method for Nailplate Joints - J Kangas

18-7-5 Principles for Design Values of Nailplates in Finland - J Kangas

18-7-6 The Strength of Nailplates - N I Bovim and E Aasheim

19-7-1 Behaviour of Nailed and Bolted Joints under Short-Term Lateral Load - Conslusions from Some Recent Research - L R J Whale, I Smith B O Hilson

19-7-2 Glued Bolts in Glulam - H Riberholt

19-7-3 Effectiveness of Multiple Fastener Joints According to National Codes and Eurocode 5 (Draft) - G Steck

19-7-4 The Prediction of the Long-Term Load Carrying Capacity of Joints in Wood Structures - Y M Ivanov and Y Y Slavic

19-7-5 Slip in Joints under Long-Term Loading - T Feldborg and M Johansen

19-7-6 The Derivation of Design Clauses for Nailed and Bolted Joints in Eurocode 5 - L R J Whale and I Smith

19-7-7 Design of Joints with Nail Plates - Principles - B Norén

19-7-8 Shear Tests for Nail Plates - B Norén

19-7-9 Advances in Technology of Joints for Laminated Timber - Analyses of the Structural Behaviour - M Piazza and G Turrini

19-15-1 Connections Deformability in Timber Structures: a Theoretical Evaluation of its Influence on Seismic Effects - A Ceccotti and A Vignoli

LOAD SHARING

3-8-1 Load Sharing - An Investigation on the State of Research and Development of Design Criteria - E Levin

4-8-1 A Review of Load-Sharing in Theory and Practice - E Levin

4-8-2 Load Sharing - B Norén

19-8-1 Predicting the Natural Frequencies of Light-Weight Wooden Floors - I Smith an Y H Chui

DURATION OF LOAD

3-9-1 Definitions of Long Term Loading for the Code of Practice - B Norén

4-9-1 Long Term Loading of Trussed Rafters with Different Connection Systems - T Feldborg and M Johansen

5-9-1 Strength of a Wood Column in Combined Compression and Bending with Respect to Creep - B Källsner and B Norén

6-9-1 Long Term Loading for the Code of Practice (Part 2) - B Norén

18-6-5 Placement and Selection of Growth Defects in Test Specimens - H Riberholt

18-6-6 Partial Safety-Coefficients for the Load-Carrying Capacity of Timber Structures - B Norén and J-O Nylander

19-6-1 Effect of Age and/or Load on Timber Strength - J Kuipers

19-6-2 Confidence in Estimates of Characteristic Values - R H Leicester

19-6-3 Fracture Toughness of Wood - Mode I - K Wright and M Fonselius

19-6-4 Fracture Toughness of Pine - Mode II - K Wright

19-6-5 Drying Stresses in Round Timber - A Ranta-Maunus

19-6-6 A Dynamic Method for Determining Elastic Properties of Wood - R Görlacher

TIMBER JOINTS AND FASTENERS

1-7-1 Mechanical Fasteners and Fastenings in Timber Structures - E G Stern

4-7-1 Proposal for a Basic Test Method for the Evaluation of Structural Timber Joints with Mechanical Fasteners and Connectors - RILEM 3TT Committee

4-7-2 Test Methods for Wood Fasteners - K Möhler

5-7-1 Influence of Loading Procedure on Strength and Slip-Behaviour in Testing Timber Joints - K Möhler

5-7-2 Recommendations for Testing Methods for Joints with Mechanical Fasteners and Connectors in Load-Bearing Timber Structures - RILEM 3TT Committee

5-7-3 CIB-Recommendations for the Evaluation of Results of Tests on Joints with Mechanical Fasteners and Connectors used in Load-Bearing Timber Structures - J Kuipers

6-7-1 Recommendations for Testing Methods for Joints with Mechanical Fasteners and Connectors in Load-Bearing Timber Structures (seventh draft) - RILEM 3TT Committee

6-7-2 Proposal for Testing of Integral Nail Plates as Timber Joints - K Möhler

6-7-3 Rules for Evaluation of Values of Strength and Deformation from Test Results - Mechanical Timber Joints - M Johansen, J Kuipers, B Norén

6-7-4 Comments to Rules for Testing Timber Joints and Derivation of Characteristic Values for Rigidity and Strength - B Norén

| | |
|---|---|
| 7-7-1 | Testing of Integral Nail Plates as Timber Joints - K Möhler |
| 7-7-2 | Long Duration Tests on Timber Joints - J Kuipers |
| 7-7-3 | Tests with Mechanically Jointed Beams with a Varying Spacing of Fasteners - K Möhler |
| 7-100-1 | CIB-Timber Code Chapter 5.3 Mechanical Fasteners; CIB-Timber Standard 06 and 07 - H J Larsen |
| 9-7-1 | Design of Truss Plate Joints - F J Keenan |
| 9-7-2 | Staples - K Möhler |
| 11-7-1 | A Draft Proposal for an International Standard: ISO Document ISO/TC 165N 38E |
| 12-7-1 | Load-Carrying Capacity and Deformation Characteristics of Nailed Joints - J Ehlbeck |
| 12-7-2 | Design of Bolted Joints - H J Larsen |
| 12-7-3 | Design of Joints with Nail Plates - B Norén |
| 13-7-1 | Polish Standard BN-80/7159-04: Parts 00-01-02-03-04-05. "Structures from Wood and Wood-based Materials. Methods of Test and Strength Criteria for Joints with Mechanical Fasteners" |
| 13-7-2 | Investigation of the Effect of Number of Nails in a Joint on its Load Carrying Ability - W Nozynski |
| 13-7-3 | International Acceptance of Manufacture, Marking and Control of Finger-jointed Structural Timber - B Norén |
| 13-7-4 | Design of Joints with Nail Plates - Calculation of Slip - B Norén |
| 13-7-5 | Design of Joints with Nail Plates - The Heel Joint - B Källsner |
| 13-7-6 | Nail Deflection Data for Design - H J Burgess |
| 13-7-7 | Test on Bolted Joints - P Vermeyden |
| 13-7-8 | Comments to paper CIB-W18/12-7-3 "Design of Joints with Nail Plates" - B Norén |
| 13-7-9 | Strength of Finger Joints - H J Larsen |
| 13-100-4 | CIB Structural Timber Design Code. Proposal for Section 6.1.5 Nail Plates - N I Bovim |
| 14-7-1 | Design of Joints with Nail Plates (second edition) - B Norén |

16-4-1 Planar Shear Capacity of Plywood in Bending - C K A Stieda

17-4-1 Determination of Panel Shear Strength and Panel Shear Modulus of Beech-Plywood in Structural Sizes - J Ehlbeck and F Colling

17-4-2 Ultimate Strength of Plywood Webs - R H Leicester and L Pham

STRESS GRADING

1-5-1 Quality Specifications for Sawn Timber and Precision Timber - Norwegian Standard NS 3080

1-5-2 Specification for Timber Grades for Structural Use - British Standard BS 4978

4-5-1 Draft Proposal for an International Standard for Stress Grading Coniferous Sawn Softwood - ECE Timber Committee

16-5-1 Grading Errors in Practice - B Thunell

16-5-2 On the Effect of Measurement Errors when Grading Structural Timber - L Nordberg and B Thunell

19-5-1 Stress-Grading by ECE Standards of Italian-Grown Douglas-Fir Dimension Lumber from Young Thinnings - L Uzielli

19-5-2 Structural Softwood from Afforestation Regions in Western Norway - R Lackner

STRESSES FOR SOLID TIMBER

4-6-1 Derivation of Grade Stresses for Timber in the UK - W T Curry

5-6-1 Standard Methods of Test for Determining some Physical and Mechanical Properties of Timber in Structural Sizes - W T Curry

5-6-2 The Description of Timber Strength Data - J R Tory

5-6-3 Stresses for EC1 and EC2 Stress Grades - J R Tory

6-6-1 Standard Methods of Test for the Determination of some Physical and Mechanical Properties of Timber in Structural Sizes (third draft) - W T Curry

7-6-1 Strength and Long-term Behaviour of Lumber and Glued Laminated Timber under Torsion Loads - K Möhler

9-6-1 Classification of Structural Timber - H J Larsen

9-6-2 Code Rules for Tension Perpendicular to Grain - H J Larsen

9-6-3 Tension at an Angle to the Grain - K Möhler

9-6-4 Consideration of Combined Stresses for Lumber and Glued Laminated Timber - K Möhler

11-6-1 Evaluation of Lumber Properties in the United States - W L Galligan and J H Haskell

11-6-2 Stresses Perpendicular to Grain - K Möhler

11-6-3 Consideration of Combined Stresses for Lumber and Glued Laminated Timber (addition to Paper CIB-W18/9-6-4) - K Möhler

12-6-1 Strength Classifications for Timber Engineering Codes - R H Leicester and W G Keating

12-6-2 Strength Classes for British Standard BS 5268 - J R Tory

13-6-1 Strength Classes for the CIB Code - J R Tory

13-6-2 Consideration of Size Effects and Longitudinal Shear Strength for Uncracked Beams - R O Foschi and J D Barrett

13-6-3 Consideration of Shear Strength on End-Cracked Beams - J D Barrett and R O Foschi

15-6-1 Characteristic Strength Values for the ECE Standard for Timber - J G Sunley

16-6-1 Size Factors for Timber Bending and Tension Stresses - A R Fewell

16-6-2 Strength Classes for International Codes - A R Fewell and J G Sunley

17-6-1 The Determination of Grade Stresses from Characteristic Stresses for BS 5268: Part 2 - A R Fewell

17-6-2 The Determination of Softwood Strength Properties for Grades, Strength Classes and Laminated Timber for BS 5268: Part 2 - A R Fewell

18-6-1 Comment on Papers: 18-6-2 and 18-6-3 - R H Leicester

18-6-2 Configuration Factors for the Bending Strength of Timber - R H Leicester

18-6-3 Notes on Sampling Factors for Characteristic Values - R H Leicester

18-6-4 Size Effects in Timber Explained by a Modified Weakest Link Theory - B Madsen and A H Buchanan

6-2-2 A Mathematical Basis for Design Aids for Timber Columns - H J Burgess

6-2-3 Comparison of Larsen an Perry Formulas for Solid Timber Columns - H J Burgess

7-2-1 Lateral Bracing of Timber Struts - J A Simon

8-15-1 Laterally Loaded Timber Columns: Tests and and Theory - H J Larsen

17-2-1 Model for Timber Strength under Axial Load and Moment - T Poutanen

18-2-1 Column Design Methods for Timber Engineering - A H Buchanan, K C Johns, B Madsen

19-2-1 Creep Buckling Strength of Timber Beams and Columns - R H Leicester

19-12-2 Strength Model for Glulam Columns - H J Blaß

SYMBOLS

3-3-1 Symbols for Structural Timber Design - J Kuipers and B Norén

4-3-1 Symbols for Timber Structure Design - J Kuipers and B Norén

1 Symbols for Use in Structural Timber Design

PLYWOOD

2-4-1 The Presentation of Structural Design Data for Plywood - L G Booth

3-4-1 Standard Methods of Testing for the Determination of Mechanical Properties of Plywood - J Kuipers

3-4-2 Bending Strength and Stiffness of Multiple Species Plywood - C K A Stieda

4-4-4 Standard Methods of Testing for the Determination of Mechanical Properties of Plywood - Council of Forest Industries, B.C.

5-4-1 The Determination of Design Stresses for Plywood in the Revision of CP 112 - L G Booth

5-4-2 Veneer Plywood for Construction - Quality Specifications - ISO/TC 139. Plywood, Working Group 6

6-4-1 The Determination of the Mechanical Properties of Plywood Containing Defects - L G Booth

6-4-2 Comparsion of the Size and Type of Specimen and Type of Test on Plywood Bending Strength and Stiffness - C R Wilson and P Eng

6-4-3 Buckling Strength of Plywood: Results of Tests and Recommendations for Calculations - J Kuipers and H Ploos van Amstel

7-4-1 Methods of Test for the Determination of Mechanical Properties of Plywood - L G Booth, J Kuipers, B Norén, C R Wilson

7-4-2 Comments Received on Paper 7-4-1

7-4-3 The Effect of Rate of Testing Speed on the Ultimate Tensile Stress of Plywood - C R Wilson and A V Parasin

7-4-4 Comparison of the Effect of Specimen Size on the Flexural Properties of Plywood Using the Pure Moment Test - C R Wilson and A V Parasin

8-4-1 Sampling Plywood and the Evaluation of Test Results - B Norén

9-4-1 Shear and Torsional Rigidity of Plywood - H J Larsen

9-4-2 The Evaluation of Test Data on the Strength Properties of Plywood - L G Booth

9-4-3 The Sampling of Plywood and the Derivation of Strength Values (Second Draft) - B Norén

9-4-4 On the Use of the CIB/RILEM Plywood Plate Twisting Test: a progress report - L G Booth

10-4-1 Buckling Strength of Plywood - J Dekker, J Kuipers and H Ploos van Amstel

11-4-1 Analysis of Plywood Stressed Skin Panels with Rigid or Semi-Rigid Connections - I Smith

11-4-2 A Comparison of Plywood Modulus of Rigidity Determined by the ASTM and RILEM CIB/3-TT Test Methods - C R Wilson and A V Parasin

11-4-3 Sampling of Plywood for Testing Strength - B Norén

12-4-1 Procedures for Analysis of Plywood Test Data and Determination of Characteristic Values Suitable for Code Presentation - C R Wilson

14-4-1 An Introduction to Performance Standards for Wood-base Panel Products - D H Brown

14-4-2 Proposal for Presenting Data on the Properties of Structural Panels - T Schmidt

# 29. CURRENT LIST OF CIB-W18 PAPERS

Technical papers presented to CIB-W18 are identified by a code CIB-W18/a-b-c, where:

a denotes the meeting at which the paper was presented. Meetings are classified in chronological order:

1 Princes Risborough, England; March 1973
2 Copenhagen, Denmark; October 1973
3 Delft, Netherlands; June 1974
4 Paris, France; February 1975
5 Karlsruhe, Federal Republic of Germany; October 1975
6 Aalborg, Denmark; June 1976
7 Stockholm, Sweden; February/March 1977
8 Brussels, Belgium; October 1977
9 Perth, Scotland; June 1978
10 Vancouver, Canada; August 1978
11 Vienna, Austria; March 1979
12 Bordeaux, France; October 1979
13 Otaniemi, Finland; June 1980
14 Warsaw, Poland; May 1981
15 Karlsruhe, Federal Republic of Germany; June 1982
16 Lillehammer, Norway; May/June 1983
17 Rapperswil, Switzerland; May 1984
18 Beit Oren, Israel; June 1985
19 Florence, Italy; September 1986

b denotes the subject:

1 Limit State Design
2 Timber Columns
3 Symbols
4 Plywood
5 Stress Grading
6 Stresses for Solid Timber
7 Timber Joints and Fasteners
8 Load Sharing
9 Duration of Load
10 Timber Beams
11 Environmental Conditions
12 Laminated Members
13 Particle and Fibre Building Boards
14 Trussed Rafters
15 Structural Stability
16 Fire
17 Statistics and Data Analysis
100 CIB Timber Code
101 Loading Codes
102 Structural Design Codes
103 International Standards Organisation
104 Joint Committee on Structural Safety
105 CIB Programme, Policy and Meetings
106 International Union of Forestry Research Organisations

c is simply a number given to the papers in the order in which they appear:

Example: CIB-W18/4-102-5 refers to paper 5 on subject 102 presented at the fourth meeting of W18.

Listed below, by subjects, are all papers that have to date been presented to W18. When appropriate some papers are listed under more than one subject heading.

LIMIT STATE DESIGN

1-1-1 Limit State Design - H J Larsen

1-1-2 The Use of Partial Safety Factors in the New Norwegian Design Code for Timber Structures - O Brynildsen

1-1-3 Swedish Code Revision Concerning Timber Structures - B Norén

1-1-4 Working Stresses Report to British Standards Institution Committee BLCP/17/2

6-1-1 On the Application of the Uncertainty Theoretical Methods for the Definition of the Fundamental Concepts of Structural Safety - K Skov and O Ditlevsen

11-1-1 Safety Design of Timber Structures - H J Larsen

18-1-1 Notes on the Development of a UK Limit States Design Code for Timber - A R Fewell and C B Pierce

18-1-2 Eurocode 5, Timber Structures - H J Larsen

19-1-1 Duration of Load Effects and Reliability Based Design (Single Member) - R O Foschi and Z C Yao

TIMBER COLUMNS

2-2-1 The Design of Solid Timber Columns - H J Larsen

3-2-1 The Design of Built-Up Timber Columns - H J Larsen

4-2-1 Tests with Centrally Loaded Timber Columns - H J Larsen and S S Pedersen

4-2-2 Lateral-Torsional Buckling of Eccentrically Loaded Timber Columns - B Johansson

5-9-1 Strength of a Wood Column in Combined Compression and Bending with Respect to Creep - B Källsner and B Norén

5-100-1 Design of Solid Timber Columns (First Draft) - H J Larsen

6-100-1 Comments on Document 5-100-1, Design of Solid Timber Columns - H J Larsen and E Theilgaard

6-2-1 Lattice Columns - H J Larsen

# 29. Current List of CIB-W18 Papers

| | |
|---|---|
| 19-15-4 | Some Experiences of Restoration of Timber Structures for Country Buildings - G Cardinale and P Spinelli |
| 19-15-5 | Non-Destructive Vibration Tests on Existing Wooden Dwellings - Y Hirashima |
| 19-16-1 | Simulation of Fire in Tests of Axially Loaded Wood Wall Studs - J König |
| 19-17-1 | Load Factors for Proof and Prototype Testing - R H Leicester |
| 19-102-1 | Eurocode 5 - Requirements to Timber - Drafting Panel Eurocode 5 |
| 19-102-2 | Eurocode 5 and CIB Structural Timber Design Code - H J Larsen |
| 19-102-3 | Comments on the Format of Eurocode 5 - A R Fewell |
| 19-102-4 | New Developments of Limit States Design for the New GDR Timber Design Code - W Rug and M Badstube |
| 19-105-1 | Tropical and Hardwood Timbers Structures - R H Leicester |

28. List of CIB-W18 Papers/Florence 1986

| | |
|---|---|
| 19-1-1 | Duration of Load Effects and Reliability Based Design (Single Member) - R O Foschi and Z C Yao |
| 19-2-1 | Creep Buckling Strength of Timber Beams and Columns - R H Leicester |
| 19-5-1 | Stress-Grading by ECE Standards of Italian-Grown Douglas-Fir Dimension Lumber from Young Thinnings - L Uzielli |
| 19-5-2 | Structural Softwood from Afforestation Regions in Western Norway - R Lackner |
| 19-6-1 | Effect of Age and/or Load on Timber Strength - J Kuipers |
| 19-6-2 | Confidence in Estimates of Characteristic Values - R H Leicester |
| 19-6-3 | Fracture Toughness of Wood - Mode I - K Wright and M Fonselius |
| 19-6-4 | Fracture Toughness of Pine - Mode II - K Wright |
| 19-6-5 | Drying Stresses in Round Timber - A Ranta-Maunus |
| 19-6-6 | A Dynamic Method for Determining Elastic Properties of Wood - R Görlacher |
| 19-7-1 | Behaviour of Nailed and Bolted Joints under Short-Term Lateral Load - Conslusions from Some Recent Research - L R J Whale, I Smith B O Hilson |
| 19-7-2 | Glued Bolts in Glulam - H Riberholt |
| 19-7-3 | Effectiveness of Multiple Fastener Joints According to National Codes and Eurocode 5 (Draft) - G Steck |
| 19-7-4 | The Prediction of the Long-Term Load Carrying Capacity of Joints in Wood Structures - Y M Ivanov and Y Y Slavic |
| 19-7-5 | Slip in Joints under Long-Term Loading - T Feldborg and M Johansen |
| 19-7-6 | The Derivation of Design Clauses for Nailed and Bolted Joints in Eurocode 5 - L R J Whale and I Smith |
| 19-7-7 | Design of Joints with Nail Plates - Principles - B Norén |
| 19-7-8 | Shear Tests for Nail Plates - B Norén |
| 19-7-9 | Advances in Technology of Joints for Laminated Timber - Analyses of the Structural Behaviour - M Piazza and G Turrini |

19-8-1 Predicting the Natural Frequencies of Light-Weight Wooden Floors - I Smith an Y H Chui

19-9-1 Another Look at Three Duration of Load Models - R O Foschi and Z C Yao

19-9-2 Duration of Load Effects for Spruce Timber with Special Reference to Moisture Influence - A Status Report - P Hoffmeyer

19-9-3 A Model of Deformation and Damage Processes Based on the Reaction Kinetics of Bond Exchange - T A C M van der Put

19-9-4 Non-Linear Creep Superposition - U Korin

19-9-5 Determination of Creep Data for the Component Parts of Stressed-Skin Panels - R Kliger

19-9-6 Creep and Lifetime of Timber Loaded in Tension and Compression - P Glos

19-10-1 Possible Code Approaches to Lateral Buckling in Beams - H J Burgess

19-11-1 Experimental Analysis on Ancient Downgraded Timber Structures - B Leggeri and L Paolini

19-12-1 Strength of Glued Laminated Timber - J Ehlbeck and F Colling

19-12-2 Strength Model for Glulam Columns - H J Blaß

19-12-3 Influence of Volume and Stress Distribution on the Shear Strength and Tensile Strength Perpendicular to Grain - F Colling

19-12-4 Time-Dependent Behaviour of Glued-Laminated Beams - F Zaupa

19-14-1 Annex on Simplified Design of W-Trusses - H J Larsen

19-14-2 Simplified Static Analysis and Dimensioning of Trussed Rafters - Part 2 - H Riberholt

19-14-3 Joint Eccentricity in Trussed Rafters - T Poutanen

19-15-1 Connections Deformability in Timber Structures: a Theoretical Evaluation of its Influence on Seismic Effects - A Ceccotti and A Vignoli

19-15-2 The Bracing of Trussed Beams - M H Kessel and J Natterer

19-15-3 Racking Resistance of Wooden Frame Walls with Various Openings - M Yasumura

# 28. List of CIB-W18 Papers
## Florence 1986

SESSION ON EUROCODE 5

DR. BRUNINGHOFF introduced paper 19-102-1, 'Eurocode 5: requirements to timber' by himself, Crubilé, Ehlbeck, Larsen and Sunley.

PROFESSOR GLOS said the treatment in the draft of differences between visual and machine grading was unclear and that the strength class system should have smaller divisions and more classes. DR. THUNELL thought the derivation of design values from Table A9.1a should be explained in clause A9.3. MR LARSEN said it was intended to produce an explanatory document to explain various parts of the draft. MR. HALLETT asked that this document should also include the procedure for fitting timbers such as Malaysian and Indonesian kerung into strength classes.

Paper 19-102-2 'Eurocode 5 and CIB structural timber design code' was presented by the author, MR. LARSEN.

DR. LEICESTER said there were inconsistencies in the presentations of column and beam formulae. For columns the Perry-Robertson formula was used, but for beams a different method of transition was applied to obtain values for lower slenderness ratios. DR. LARSEN agreed that this was a section that should be reviewed and expressed the hope that a code proposal would be produced for the Eurocode and the next revision of the CIB code.

MR. FEWELL presented paper 19-102-3 'Comments on the format of Eurocode 5', which criticised the format of the draft Eurocode on the basis that the multiple uncertainties covered by each partial coefficient resulted in irrational values, that would make it difficult to incorporate the results of future research.

MR. LARSEN said it was not possible to quantify timber uncertainties separately, and the tendency in Eurocodes was to abandon the aim of separation. He said the format had to follow that given in Eurocode 1 and the factors 1.35 and 1.5 had been imposed upon the drafting panel. He also said that combining the modification factors for duration of load and moisture content meant that you could allow for the effect of moisture content on the duration of load effect.

PROFESSOR GLOS supported paper 19-102-3 and argued that Eurocode 5 needed a better system which was not bound by the requirements of other materials. He thought CIB-W18A should ask the panel to put forward a rational proposal. MR. LARSEN said they could reserve the possibility of future changes when further study had been undertaken in CIB-W18A.

DR STIEDA said the panel had responsibilities to the CEC and he hoped W18A would work to provide informed comments to the Commission.

MR. WHALE presented paper 19-7-6, 'The derivation of design clauses for nailed and bolted joints in Eurocode 5', by himself and I. Smith.

DR LEICESTER noted that two member joints were tending to fail in mode 1A in current Australian tests, and wind failures perpendicular to grain had been experienced. MR WHALE said his ultimate capacities for larger bolts were governed by splitting.

MR. LARSEN said he supported the paper because he had long been a proponent of Johansen's theories on joints. He added that the work would have influenced Eurocode 5 if it had been available earlier, and would be studied for incorporation later. He thought one formula should cater for softwoods and hardwoods, and MR. WHALE said there was a good trend covering both. MR. LARSEN felt more tests on bolts would be valuable.

DR. STECK introduced his paper 19-7-3, 'Effectiveness of multiple fastener joints according to national codes and Eurocode 5 (draft)', which displayed the design rules adopted for multiple nails and bolts in 15 countries, and compared the EC5 proposals with practice elsewhere.

He said the big differences found emphasized the conclusions in a paper prepared for the previous meeting (18-7-3), and demonstrated the need for further research.

Session

27. Eurocode 5

Rapporteur: A R Fewell

# CREEP BUCKLING STRENGTH OF TIMBER BEAMS AND COLUMNS

by R.H. Leicester
CSIRO Division of Building Research, Melbourne, Australia

## SUMMARY

A simple structural model is developed for predicting the strength of timber beam-columns. The model includes the effects of initial crookedness and of creep. Two different material failure criteria are used. Numerical solutions are given to illustrate the predicted performance characteristics of beam-columns and to illustrate the influence of the various structural parameters.

## INTRODUCTION

The recommendations in the draft Eurocode 5 (Cubilé *et al.*, 1985) for computing the design strength of timber beam-columns are based on a study by Larsen and Theilgaard (1979). In that study the effects of timber creep are neglected and the strength of timber is defined in terms of a linear criterion that relates bending and compression stress at failure.

It is the purpose of this paper to extend the original study to include the effects of creep, and also to examine the consequences of using an alternative failure criterion. The creep model to be used is that applied in the first Australian Standard on timber engineering design AS CA65 (Standards Association of Australia, 1972) and is also applied in the latest draft of that Standard, now AS 1720 (Standards Association of Australia, 1986). The alternative failure criterion to be examined is a bilinear one, based on experimental data obtained in studies by Buchanan (1984).

In drafting design recommendations for creep buckling, a dominating consideration is that while there is little relevant experimental data available, buckling strength is a function of a great number of complex parameters; examples of these parameters include those used for material failure and creep criteria, material variability, nonlinear material characteristics, the random dispersion of defects and initial crookedness. Thus any structural model chosen will be either over-simplified or one in which there is considerable uncertainty concerning the appropriate values to be used for important parameters.

In the following, a relatively simple structural model is developed. Most of the equations are quite general in scope, but for clarity the discussion will be limited to the particular structural example illustrated in Figure 1. The structural element shown is a beam column of rectangular cross-section b x d as shown in Figure 1(a); the lateral restraints are arranged so that the effective buckling lengths about the major and minor axes are $L_x$ and $L_y$ respectively. The load is an axial load, denoted by N, applied with an eccentricity e in the y direction; this leads to an effective applied bending moment M given by

$$M = Ne \tag{1}$$

The notation to be used is defined in Appendix IV.

## EQUATIONS OF EQUILIBRIUM

The following equilibrium equations are those cited by Larsen and Theilgaard (1979), slightly modified to conform with the recommendations of Bleich (1952)

$$EI_x \frac{d^2v}{dz^2} = - N (v + v_o) - M \tag{2}$$

$$EI_y \frac{d^2u}{dz^2} = - N (u + u_o) - M (\phi + \phi_o) \tag{3}$$

$$GJ \frac{d\phi}{dz} = M \left[\frac{du}{dz} + \frac{du_o}{dz}\right] \tag{4}$$

where u and v denote the elastic deflections in the x any y direction respectively and $\phi$ denotes the elastic twist about the z-axis; the notations $u_o$, $v_o$ and $\phi_o$ denote the initial crookedness of the beam-column; the terms $EI_x$ and $EI_y$ denote the bending stiffness about the x- and y-axes respectively and GJ is the torsional stiffness.

Equations (2)-(4) may be extended to include the effects of warping and twist buckling by using an effective torsional stiffness $(GJ)_{eff}$ defined by

$$(GJ)_{eff} = GJ + \pi^2 EI'/L_y^2 - N I_p/A \tag{5}$$

where EI' denotes the warping stiffness and $I_p = I_x + I_y$ denotes the polar moment of inertia.

## RHEOLOGICAL MODEL

The rheological model to be used has been investigated in an earlier paper (Leicester, 1971a) and is illustrated schematically in Figue 2. It assumes that the total strain $\varepsilon$ in timber comprises two components, an elastic component $\varepsilon_e$ and a mechano-sorptive component $\varepsilon_m$ which are related by

$$\varepsilon = \varepsilon_e + \varepsilon_m \tag{6}$$

where

$$\varepsilon_e = \sigma/E \tag{7}$$

$$\frac{d\varepsilon_m}{dm} = (\sigma/E)\, h(m) \tag{8}$$

where $\sigma$ denotes the applied stress, E denotes the modulus of elasticity, and h(m) is some function of m, a mechano-sorptive parameter that induces creep. The phenomenon of mechano-sorptive deformation has been studied extensively, for example by Armstrong and Christensen (1961); Grossman (1971); Hearmon and Paton (1964) and Leicester (1971a). However a quantitative relationship between creep and a mechano-sorptive parameter has not yet been satisfactorily defined.

From equation (8) it is apparent that for an unloaded beam the elastic strain $\varepsilon_e$ is zero, whereas the mechano-sorptive strain $\varepsilon_m$ remains as a permanent set.

For an element under a constant stress, equations (7) and (8) lead to the result that the strain at the end of a design life is given by

$$\varepsilon = \varepsilon_o + \varepsilon_e\, (1 + \xi) \tag{9}$$

in which

$$\xi = \int_{m_1}^{m_2} h(m)\, dm \tag{10}$$

where $\varepsilon_o$ denotes the initial strain, $\varepsilon_e$ denotes the elastic strain, $m_1$ and $m_2$ denote the value of the mechano-sorptive parameter at the start and the end of the design lifetime, and $\xi$ will be termed the creep factor. This creep factor plays an important role in the prediction of buckling strength. For practical purposes it is most conveniently measured by noting the long-term deflection of a beam under a constant load.

## DEFORMATIONS

### General

It has been shown (Leicester, 1970) that simple equations of deformation for buckling systems can be derived provided the initial crookedness and the deformations due to lateral loading are in the form of the primary eigenmode shape corresponding to the critical elastic load. In the following it will be assumed that this holds true, although this may not be exactly correct for practical situations.

The deformation equations are stated in terms of amplification factors that are functions of the critical elastic loads.

### Critical Elastic Loads

For the case of the beam-column shown in Figure 1, the critical elastic loads can be obtained by taking $u_o = v_o = \phi_o = 0$ and substituting the following eigenmode shapes into equations (1)-(4),

$$v = a_1 \cos (\pi z/L_x) \tag{11}$$

$$u = a_2 \cos (\pi z/L_y) \tag{12}$$

$$\phi = a_3 \cos (\pi z/L_y) \tag{13}$$

where $a_1$, $a_2$ and $a_3$ are arbitrary constants.

Equation (2) shows that for in-plane buckling, i.e. with v deformations only, the critical elastic load $N_{ev}$ is given by

$$N_{ev} = \pi^2 EI_x/L_x^2 \tag{14}$$

Equations (3) and (4) show that for out-of-plane buckling, i.e. with u and $\phi$ deformations only, the critical elastic load $N_{eu\phi}$ is given by

$$N_{eu\phi} = \frac{-GJ + \sqrt{(GJ)^2 + 4.GJ.N_{eu}\ e^2}}{2e^2} \qquad (15)$$

where

$$N_{eu} = \pi^2 E I_y / L_y^2 \qquad (16)$$

and the parameters $a_2$ and $a_3$ are tied by the constraint condition

$$a_3\ GJ = a_2\ N_{eu\phi}\ e \qquad (17)$$

For the particular case of bending only, the critical elastic bending moment $M_{eu\phi}$ is given by

$$M_{eu\phi} = \lim_{e \to \infty} N_{eu\phi} \cdot e$$

$$= \sqrt{N_{eu} \cdot GJ} \qquad (18)$$

Initial Crookedness

In order to follow the primary eigenmode shape, the initial crookedness of the beam column will be defined by

$$v_o = \Delta_{vo} \cos(\pi z / L_x) \qquad (19)$$

$$u_o = \Delta_{uo} \cos(\pi z / L_y) \qquad (20)$$

$$\phi_o = \Delta_{\phi o} \cos(\pi z / L_y) \qquad (21)$$

However if equations (20) and (21) are to correctly describe the eighenmode shape, then as indicated by equation (17), the parameters $\Delta_{uo}$ and $\Delta_{\phi o}$ are tied by the constraint

$$\Delta_{\phi o}\ GJ = \Delta_{uo}\ N_{eu\phi}\ e \qquad (22)$$

Deformations due to Lateral Loading

As indicated above, for simplicity it is necessary that the deformations due to lateral loads be in an eigenmode shape, i.e. the deformation due to M = Ne be given by

$$v_b = \Delta_{vb} \cos (\pi z/L_x) \tag{23}$$

The corresponding value of applied bending moment due to lateral loads is $EI_x \frac{d^2 v_b}{dz^2}$. Thus if the maximum applied bending moment along the beam-column is equated to the value Ne, then the effective deflection at the centre of the beam is given by

$$\Delta_{vb} = Ne/N_{ev} \tag{24}$$

For the case of the pin-ended column, this underestimates the true value by 19%.

Maximum Deformations Under Load

It will be assumed that during the design life of a beam-column, it is subjected to a dead load that causes a bending moment $r_b M$ and axial load $r_c N$, where M and N represent peak values applied at the end of the design life. Then, as shown in Appendix II, the maximum lateral deformations $\Delta_x$ and $\Delta_y$ and maximum twist $\Delta_\theta$ are given by

$$\Delta_y = \Delta_{vo} (1 + \alpha_1) e^{\alpha_2 \xi} + \Delta_{vb} \{1 + (r_b/\alpha_2) (1 + \alpha_2) (e^{\alpha_2 \xi} - 1)\} \tag{25}$$

$$\Delta_x = \Delta_{uo} (1 + \alpha_3) e^{\alpha_4 \xi} \tag{26}$$

$$\Delta_\theta = \Delta_{\phi o} (1 + \alpha_3) e^{\alpha_4 \xi} \tag{27}$$

where the amplification factors $\alpha_1 - \alpha_4$ are given by

$$\alpha_1 = \frac{N}{N_{ev} - N} \tag{28}$$

$$\alpha_2 = \frac{r_c N}{N_{ev} - r_c N} \tag{29}$$

$$\alpha_3 = \frac{N}{N_{eu\phi} - N} \tag{30}$$

$$\alpha_4 = \frac{r_c N}{N_{eu\phi} - r_c N} \tag{31}$$

The critical elastic loads $N_{ev}$ and $N_{eu\phi}$ are computed according to equations (14) and (15). In using equation (15) to compute $N_{eu\phi}$, the appropriate value of eccentricity e is to be taken as (M/N) for equation (30) and ($r_b$ M/$r_c$ N) for equation (31).

## FAILURE CRITERIA

The failure criterion will be stated in terms of an applied bending stress $\sigma_b$ and compression stress $\sigma_c$. The maximum applied stress is computed from the following,

$$\sigma_b = \frac{N(e + \Delta_y)}{Z_x} + \frac{N(e\ \Delta_\theta + \Delta_x)}{Z_y} \tag{32}$$

$$\sigma_c = N/A \tag{33}$$

where A denotes the cross-sectional area, and $Z_x$ and $Z_y$ denotes the section moduli about the x- and y-axes respectively. It should be noted that not only does equation (32) imply an idealized linear relationship between the two bending stresses, but it also implies that they occur at the same point.

The most commonly used failure criterion is the linear failure criterion defined by

$$(\sigma_b/f_b) + (\sigma_c/f_c) \leq 1 \tag{34}$$

where $f_b$ and $f_c$ denote the bending and compression strength of timber.

An alternative failure criterion, based on experimental data obtained by Buchanan (1984), is

$$(\sigma_b/f_b) \leq 2.2 - 2.2\ (\sigma_c/f_c) \tag{35a}$$

$$(\sigma_b/f_b) \leq 1.0 - 0.2\ (\sigma_c/f_c) \qquad (35b)$$

This criterion will be denoted as the 'bilinear failure criterion'. The two failure criteria are illustrated in Figure 3.

## INITIAL CROOKEDNESS

For the rectangular beam-columns shown in Figure 1, Larsen and Theilgaard (1979) have assumed the following value of initial crookedness,

$$\Delta_{vo} = 0.0035\ L_x \qquad (36)$$

$$\Delta_{uo} = 0.0035\ L_y \qquad (37)$$

$$\Delta_{\phi o} = 0.05\ b/d \qquad (38)$$

In the latest draft of the Australian Standard AS 1720 (Standards Association of Australia, 1986), the following values are assumed for the initial crookedness,

$$\Delta_{vo} = L_x^2/(15000\ d) \qquad (39)$$

$$\Delta_{uo} = L_y^2/(15000\ b) \qquad (40)$$

$$\Delta_{\phi o} = L_y/(5460\ b) \qquad (41)$$

The AS 1720 proposals have two convenient characteristics when compared to those of Larsen and Theilgaard. First, the values of $\Delta_{vo}$ and $\Delta_{uo}$ relate to a specified curvature, and hence remain valid even if a piece of timber is cut in half. Second, the value of $\Delta_{\phi o}$ tends to zero for short pieces of timber, and this is obviously more realistic than the constant value implied by equation (38).

However in the numerical study to be described, the crookedness values of Larsen and Theilgaard will be assumed, since these are used for Eurocode 5.

## CREEP FACTORS

In the Australian Standard AS 1720, creep factors $\xi = 1$ and $\xi = 2$ have been assumed for timber that is intially seasoned (dry) or unseasoned (green) respectively. Test data on beams under constant load indicate that these figures are frequently exceeded for the case of a design life of 50 years. In particular the creep factors for unseasoned, collapse-susceptible hardwoods, may exceed $\xi = 5$.

## STRENGTH OF BEAM-COLUMNS

The ability of a beam-column to carry a given load condition is checked by computing deflections according to equations (25)-(27), stresses according to equations (32) and (33) and then inserting these into the failure criterion of equation (34) or (35). By gradually incrementing the axial load N and checking the failure criterion, the ultimate load capacity of the beam-column can be determined.

For the general case the ultimate load capacity is most easily obtained through use of a microcomputer. However for the particular case of a creep factor $\xi = 0$, and the linear failure criterion of equation (34), two useful closed form solutions may be obtained.

For a column constrained so that it can bend only about the x-axis, the ultimate axial load $N_{ult}$ is given by

$$(N_{ult}/N_o) = \tfrac{1}{2} \{\psi_{col} - \sqrt{\psi_{col}^2 - 4\ (N_{ev}/N_o)}\} \qquad (42)$$

where

$$\psi_{col} = 1 + (N_{ev}/N_o) + (N_{ev}\ \Delta_{vo}/M_o) \qquad (43)$$

in which

$$N_o = Af_c \qquad (44)$$

$$M_o = Z_x\ f_b \qquad (45)$$

For the case of a beam without axial load, the ultimate bending moment $M_{ult}$ is given by

$$(M_{ult}/M_o) = \tfrac{1}{2} \{\psi_{beam} - \sqrt{\psi^2_{beam} - 4\ (M_{eu\phi}/M_o)}\} \qquad (46)$$

where

$$\psi_{beam} = (M_{eu\phi}/M_o)\ [1 + \Delta_{\phi o}\ (Z_x/Z_y)] \qquad (47)$$

Equation (42) is identical with that derived by Larsen and Theilgaard (1974). Furthermore, for the case of pure bending, the equations of Larsen and Theilgaard reduce the equation (46) provided the eigenmode shape condition $\phi_o = (M_{eu\phi}/GJ)\ u_o$ specified in equation (22) is applied.

## NUMERICAL SOLUTIONS

The results of limited numerical studies will be given in order to indicate the influence of various structural parameters. The beam-column analysed is that shown in Figure 1, and parameters used were as follows:

| | |
|---|---|
| $b = 40$ mm | $d = 15$ mm |
| $f_c = 27$ MPa | $f_b = 30$ MPa |
| $E = 7500$ MPa | $G = 500$ MPa |
| $r_c = 0.8$ | $r_b = 0.8$ |

Equations (36)-(38) are used for assumptions on the initial crookedness.

Figure 4 shows the strength of a column that has numerous lateral restraints so that it can bend about the x-axis only. The slenderness coefficient of the column will be denoted by $\lambda_{col}$ and is defined by

$$\lambda_{col} = \sqrt{N_o/N_{ev}} \qquad (48)$$

It is to be noted that the choice of failure criterion has a marked effect on the predicted strength of columns with intermediate slenderness, and that the choice of creep factor $\xi$ affects predictions for both intermediate and slender columns.

Figure 5 shows the same column compared with one that can bend about both the x- and y-axes; for the latter the ratio of effective lengths has been chosen so as to provide equal buckling strengths about both axes. For intermediate columns the difference in the predicted strength of the two types of columns is about 20 per cent.

Figure 6 shows the predicted bending strength of slender beams. The slenderness coefficient of the beam will be denoted by $\lambda_{beam}$ and defined by

$$\lambda_{beam} = \sqrt{M_o/M_{eu\phi o}} \qquad (49)$$

The effect of creep and slenderness is similar to that for columns shown in Figure 4. Because of the form of initial twist defined by equation (38), the predicted strength is not equal to $M_o$ when the slenderness coefficient $\lambda_{beam}$ is zero.

Figures 7, 8 and 9 show predicted interaction graphs for combined bending and compression for three beam-column geometries. It is to be noted that for the beam-column in Figures 7 and 8 the conditions $L_x/d < L_y/b$ is obtained, buckling is predominantly about the minor axis, and the interaction curve has a parabolic form. For the beam-column in Figure 9 the condition $L_x/d > L_y/b$ is obtained, buckling is predominantly about the major axis, and the interaction curve has a linear form. The shapes of these interaction curves have been used to formulate design recommendations in the current draft Australian Standard AS 1720 (Standards Association of Austrlaia, 1986).

## CONCLUDING COMMENT

The equations derived herein provide a relatively simple method of calculating predicted strengths for beam columns. The structural model used includes sufficient parameters to permit an empirical fit with any data that may be obtained within the foreseeable future. Input parameters include creep, initial crookedness and failure criteria. In view of the limited data available on beam-columns, it is unlikely that use of a more complex model is warranted.

It is outside the scope of this paper to discuss appropriate values for model parameters. The data on long-term performance characteristics is extremely limited; some information is given in papers by Leicester (1971b, 1972) and Cheng and Schniewind (1985). Even for short-term characteristics, the data is not extensive.

ACKNOWLEDGMENTS

The writer is indebted to Ms F. Geermans for undertaking the computations required for Figures 4-9.

## APPENDIX 1. EIGENMODE DEFORMATIONS

### In-plane Deformations

A generalized form of equation (2) is

$$L_1 \{v - v_b\} + N L_2 \{v + v_o\} = 0 \tag{A1}$$

where $v_b$ denotes the deflection due to the applied moment M, and the term L{ } denotes a linear differential operator.

The critical elastic load $N_{ev}$ is given by the solution of the eigen equation

$$L_1 \{v_{cr}\} + N_{ev} L_2 \{v_{cr}\} = 0 \tag{A2}$$

where $v_{cr}$, a function of $z_1$ denotes a deflection corresponding to the primary eigenmode shape.

It will be assumed that all deformations follow the primary eigenmode shape as follows.

$$v = a\, v_{cr} \tag{A3}$$

$$v_o = a_o\, v_{cr} \tag{A4}$$

$$v_b = b_o\, v_{cr} \tag{A5}$$

where a, $a_o$ and $b_o$ are constants.

Substitution of equations (A3)-(A5) into (A1) leads to

$$(a-b_o) L_1 \{v_{cr}\} + N (a+a_o) L_2 \{v_{cr}\} = 0 \tag{A6}$$

Equations (A2) and (A6) then give

$$a = a_o N/(N_{ev} - N) + b_o N_{ev}/(N_{ev} - N) \tag{A7}$$

Using equations (A3)-(A4), equation (A7) leads to

$$v = \alpha_1 v_o + (1 + \alpha_1) v_b \tag{A8}$$

where $\alpha_1$ is the amplification factor defined in equation (28).

For deformations under dead load conditions, i.e. due to an axial load $r_c$ N, the amplification factor $\alpha_1$ should be replaced by the amplification factor $\alpha_2$ defined in equation (29).

Out-of-plane Deformations

Generalized forms of equations (3) and (4) are

$$L_3\{u\} + N L_4(\{u + U_o\} + N L_5\{\phi + \phi_o\} = 0 \quad \text{(A9)}$$

$$L_6\{\phi\} + N L_1\{u + u_o\} = 0 \quad \text{(A10)}$$

where again the notation L{ } denotes a linear differential operator.

The critical elastic load $N_{eu\phi}$ is given by the solution of the eigen equations

$$L_3\{u_{cr}\} + N_{eu\phi} L_4\{u_{cr}\} + N_{eu\phi} L_5\{\phi_{cr}\} = 0 \quad \text{(A11)}$$

$$L_6\{\phi_{cr}\} + N_{eu\phi} L_7\{u_{cr}\} = 0 \quad \text{(A12)}$$

where $u_{cr}$ and $\phi_{cr}$ are functions of z and denote the deformation of the primary eigenmode shape corresponding to the critical elastic load $N_{eu\phi}$.

It will now be assumed that all deformations have the primary eigenmode shape as follows,

$$u = a\, u_{cr} \quad \text{(A13)}$$

$$u_o = a_o\, u_{cr} \quad \text{(A14)}$$

$$\phi = a\, \phi_{cr} \quad \text{(A15)}$$

$$\phi_o = a_o\, \phi_{cr} \quad \text{(A16)}$$

where a and $a_o$ are constants.

Substitution of equations (A13)-(A16) into (A9) and (A10) lead to

$$a\, L_3\{u_{cr}\} + N(a+a_o)\, L_4\{u_{cr}\} + N\,(a+a_o)\, L_5\{\phi_{cr}\} = 0 \quad \text{(A17)}$$

$$a\, L_6\{\phi_{cr}\} + N(a+a_o)\, L_7\{u_{cr}\} = 0 \quad \text{(A18)}$$

Equations (A11), (A12), (A17) and (A18) then give

$$a = a_o \, N/(N_{eu\phi} - N) \tag{A19}$$

$$u = \alpha_3 \, u_o \tag{A20}$$

$$\phi = \alpha_3 \, \phi_o \tag{A21}$$

where $\alpha_3$ is the amplification factor defined in equation (30).

For deformations under dead load conditions, i.e. subjected to an axial load $r_c N$ and bending moment $r_b M$, the amplification factor $\alpha_3$ should be replaced by the amplification factor $\alpha_4$ defined in equation (31).

## APPENDIX II. DEFORMATION OF BEAM-COLUMNS

### In-plane Deformations

Under dead load conditions, the deformation in the y direction $\Delta_y$ may be written

$$\Delta_y = \Delta_{vo} + \Delta_{vm} + \Delta_{ve} \qquad (A22)$$

where $\Delta_{vo}$ is due to initial crookedness, $\Delta_{vm}$ is the permanent set due to mechano-sorptive deformations, and $\Delta_{ve}$ is the elastic deformation due to a moment $r_b M$ and axial load $r_c N$.

If it is assumed that all lateral deformation follow the primary eigenmode shape, then from equation (A8) it follows that

$$\Delta_{ve} = \alpha_2 \, (\Delta_{vo} + \Delta_{vm}) + (1 + \alpha_2) \, r_b \, \Delta_{vb} \qquad (A23)$$

where $\alpha_2$ is the amplification factor defined in equation (29) and $\Delta_{vb}$ is the maximum lateral deflection due to a moment M.

Because the various components of deformation all follow the same eigenmode shape, it can be assumed that the stress level in the timber is proportional to the elastic deformation $\Delta_{ve}$ and hence application of the creep equations (6)-(8) leads to

$$\frac{d\Delta_{vm}}{dm} = \Delta_{ve} . h(m) \qquad (A24)$$

The substitution of equation (A23) into (A24) and integrating $\Delta_{vm}$ from zero to the final value $\Delta_{vmf}$ as the mechano-sorptive parameter m goes from $m_1$ to $m_2$ leads to

$$\Delta_{vmf} = \Delta_{vo} \, (e^{\alpha_2 \xi} - 1) + \Delta_{vb} (r_b/\alpha_2) \, (1 + \alpha_2) \, (e^{\alpha_2 \xi} - 1) \qquad (A25)$$

where the creep factor $\xi$ is defined by equation (1).

After this permanent set has been achieved, the full moment M and axial load N are applied, and the total deflection is given by

$$\Delta_y = \Delta_{vo} + \Delta_{vmf} + \Delta_{ve} \qquad (A26)$$

Using equation (A8) this leads to

$$\Delta_x = (1 + \alpha_1)(\Delta_{vo} + \Delta_{vmf} + \Delta_{vb}) \qquad (A27)$$

Substitution of the value of $\Delta_{vmf}$ in equation (A25) into (A27) leads to equation (25).

Out-of-plane Deformations

Out-of-plane deformations refer to u and $\phi$ deformations. Under dead load conditions, the deformation $\Delta_x$ may be written

$$\Delta_x = \Delta_{uo} + \Delta_{um} + \Delta_{ue} \qquad (A28)$$

where $\Delta_{uo}$ is due to initial crookedness, $\Delta_{um}$ is the additional permanent set due to mechano-sorptive deformations and $\Delta_{ue}$ is the elastic deformation due to the application of an axial load $r_c N$ with an eccentricity $r_b M/r_c N$.

If it is assumed that deformations follow the eigenmode shape, then equation (A20) leads to

$$\Delta_{ue} = (\Delta_{uo} + \Delta_{um})\,\alpha_4 \qquad (A29)$$

where $\alpha_4$ is the amplification factor defined in equation (31).

Because the various components of deformation all follow the same eigenmode shape, it can be assumed that the stress level in the timber is proportional to the elastic deformation $\Delta_{ue}$ and hence application of the creep equations (6)-(8) leads to

$$\frac{d\Delta_{um}}{dm} = \Delta_{ue}\, h(m) \qquad (A30)$$

The substitution of equation (A29) into (A30) and integrating $\Delta_{um}$ from zero to the final value of $\Delta_{umf}$, and the mechano-sorptive parameter m from $m_1$ to $m_2$ leads to

$$\Delta_{umf} = \Delta_{uo}\,(e^{\alpha_4 \xi} - 1) \qquad (A31)$$

After this permanent set has been achieved, the full axial load N is applied at an eccentricity M/N and this leads to the total deflection

$$\Delta_x = \Delta_{uo} + \Delta_{umf} + \Delta_{ue} \tag{A32}$$

Using equations (A20) and (A21) leads to

$$\Delta_x = (1 + \alpha_3)\ (\Delta_{uo} + \Delta_{umf}) \tag{A33}$$

The substitution of $\Delta_{umf}$ from equation (A31) into (A33) gives the deformations stated in equation (26).

Since the u and $\phi$ deformations are tied by being part of a common eigenmode shape, equation (27) follows directly from equation (26).

## APPENDIX III. REFERENCES

Armstrong, L.D. and Christensen, G.N. (1961). Influence of moisture changes on deformation of wood under stress. *Nature*, Vol. 191, No. 479, pp. 869-870.

Bleich, F. (1952). *Buckling Strength of Metal Structures*. McGraw-Hill Book Co. Inc., New York. pp. 158-160, 164.

Buchanan, A.H. (1984). Design of sawn timber members for combined bending and axial loading. Proc. of Pacific Timber Engineering Conference, Auckland, New Zealand, May, pp. 588-595.

Cheng, J. and Schniewind, A.P. (1985). Creep buckling of small, slender wood columns under cyclic environment. *Wood and Fiber Science*, Vol. 17, No. 2, pp. 159-169.

Crubilé, P., Ehlbeck, J., Brüninghoff, H., Larsen, H.J. and Sunley, J. (1985). Eurocode 5, Common Unified Rules for Timber Structures. October.

Grossman, P.U.A. (1971). The use of Leicester's rheological model for mechano-sorptive deformations. *Wood Science and Technology*, Vol. 5, No. 3, pp. 232-235.

Hearmon, R.F.S. and Paton, J.M. (1964). Moisture content changes and creep of wood. *Forest Products Journal*, Vol. 14, No. 8, pp. 357-360.

Larsen, H.J. and Theilgaard, E. (1979). Laterally load timber columns. *Journal of the Structural Division, ASCE*, Vol. 105, No. ST7. July, pp. 1347-1363.

Leicester, R.H. (1970). Southwell plot for beam-columns. *Journal of the Engineering Mechanics Division, ASCE*, Vol. 96, No. EM6, December, pp. 945-965.

Leicester, R.H. (1971a). A rheological model for mechano-sorptive deflections of beams. *Wood Science and Technologyb*, Vol. 5, No. 3, pp. 211-220.

Leicester, R.H. (1971b). *Lateral deflections of timber beam-columns during drying*. Wood Science and Technology, Vol. 5, No. 3, pp. 221-231.

Leicester, R.H. (1972). Contemporary concepts for structural timber codes. Seminar on Timber Design and Construction in the 70s. Auckland, New Zealand (also Reprint No. 993, CSIRO Forest Products Laboratory, Melbourne, Australia).

Leicester, R.H. (1985). Buckling strength of timber columns and beams. Timber Engineering for Developing Countries; Part 4, Strength Characteristics and Timber Design. UNIDO/IO.609.

Standards Association of Australia (1972). AS CA65, SAA Timber Engineering Code. Standards House, Sydney, Australia.

Standards Association of Australia (1986). AS 1720 Timber Structures, Part 1 - Design Methods. Draft No. 6. Standards House, Sydney, Australia.

# APPENDIX IV. NOTATION

| | | |
|---|---|---|
| $a$ | = | constant indicating magnitude of elastic deflection |
| $a_o$ | = | constant indicating magnitude of initial crookedness |
| $a_1, a_2, a_3$ | = | constants defined in equations (11)-(13) |
| $A$ | = | area of cross-section |
| $b$ | = | width of rectangular member, Figure 1 |
| $b_o$ | = | constant indicating magnitude of deflection due to applied bending moment |
| $d$ | = | depth of rectangular member, Figure 1 |
| $e$ | = | eccentricity fo axial load, Figure 1 |
| $E$ | = | modulus of elasticity |
| $f_b$ | = | bending strength |
| $f_c$ | = | compression strength |
| $G$ | = | shear modulus |
| $h(m)$ | = | function of mechano-sorptive function, equation (8) |
| $I_x, I_y$ | = | moments of inertia about x and y axes |
| $I_p$ | = | polar moment of inertia |
| $J$ | = | torsional constant |
| $L_x, L_y$ | = | effective lengths for buckling about the x and y axes respectively |
| $L\{\ \}$ | = | linear differential operator |
| $m$ | = | mechano-sorptive parameter |
| $M$ | = | bending moment about the x axis |
| $M_{eu\phi}$ | = | critical elastic moment, equation (18) |
| $M_o$ | = | $Z_x f_b$, cross-section strength for bending moments |
| $M_{ult}$ | = | bending moment to cause failure in the absence of an axial load |

$N$ = axial load

$N_{ev}, N_{eu\phi}, N_{eu}$ = critical elastic axial loads, equations (14), (15) and (16)

$N_o$ = $Af_c$, cross-section strength for axial loads

$N_{ult}$ = axial load to cause failure in the absence of a bending moment

$r_b$ = ratio of dead load to live load for bending moment M

$r_c$ = ratio of dead load to live load for axial force N

$u$ = elastic deflection in x direction, Figure 1

$u_{cr}$ = deflection u for primary eigenmode shape

$u_o$ = initial crookedness in x direction

$v$ = elastic deflection in y direction, Figure 1

$v_b$ = deflection due to applied bending moment

$v_{cr}$ = deflection v for primary eigenmode shape

$v_o$ = initial crookedness in y direction

$x, y, z$ = cartesian coordinates, Figure 1

$Z_x, Z_y$ = section moduli about x and y axes respectively

$\alpha_1, \alpha_2, \alpha_3, \alpha_4$ = amplification factors defined in equations (28)-(31)

$\Gamma$ = warping constant

$\Delta$ = maximum deformation along the beam-column

$\Delta_x, \Delta_y$ = component of $\Delta$ in x and y directions

$\Delta_\theta$ = rotational component of $\Delta$

$\Delta_{uo}, \Delta_{vo}$ = initial component of $\Delta$ in x and y directions

$\Delta_{\phi o}$ = initial value of $\Delta_\theta$

$\Delta_{vb}$ = component of $\Delta$ in y direction due to applied bending moment

$\Delta_{ue}, \Delta_{ve}$ = elastic component of $\Delta$ in x and y directions

$\Delta_{um}, \Delta_{vm}$ - mechano sorptive part of $\Delta$, components in x and y directions

$\Delta_{umf}, \Delta_{vmf}$ = final values of $\Delta_{um}$ and $\Delta_{vm}$ after a design life-time of creep

$\varepsilon$ = strain

$\varepsilon_e$ = elastic component of strain

$\varepsilon_s$ = mechano-sorptive component of strain

$\lambda_{col}, \lambda_{beam}$ = slenderness coefficients of columns and beams, equations (48) and (49)

$\xi$ = creep factor, equation (10)

$\sigma$ = applied stress

$\sigma_b, \sigma_c$ = applied bending and compression stress

$\phi$ = elastic rotation about the z-axis

$\phi_{cr}$ = rotation for primary eigenmode shape

$\phi_o$ = initial crookedness due to twist

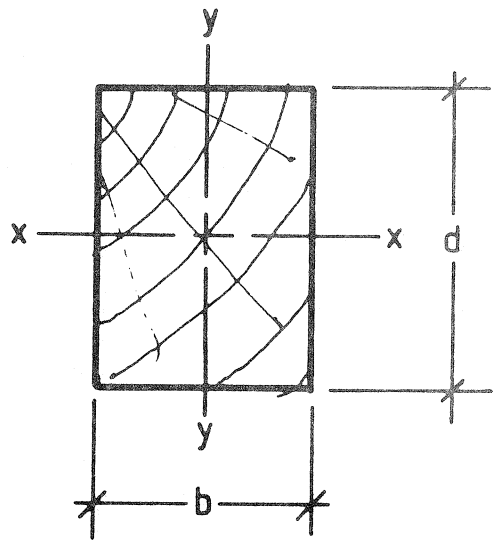


(a) Member cross section

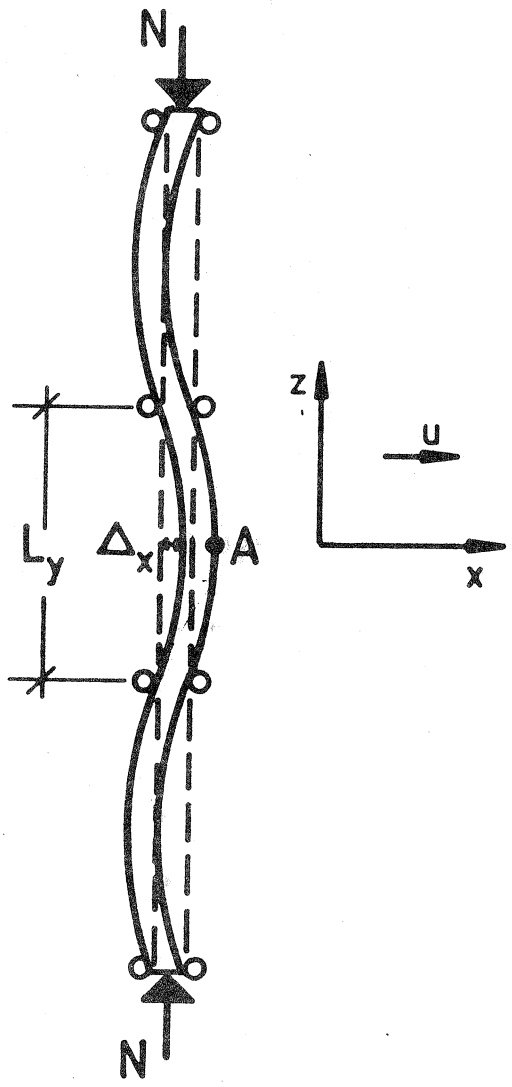


(b) Front Elevation

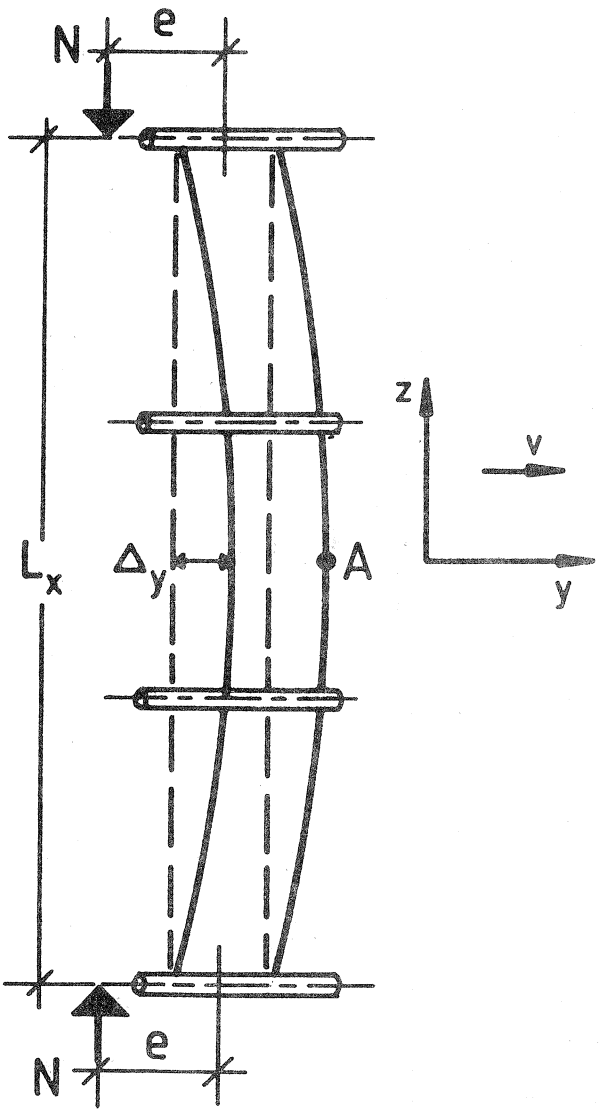


(c) Side Elevation

**Figure 1 Notation for beam-column**

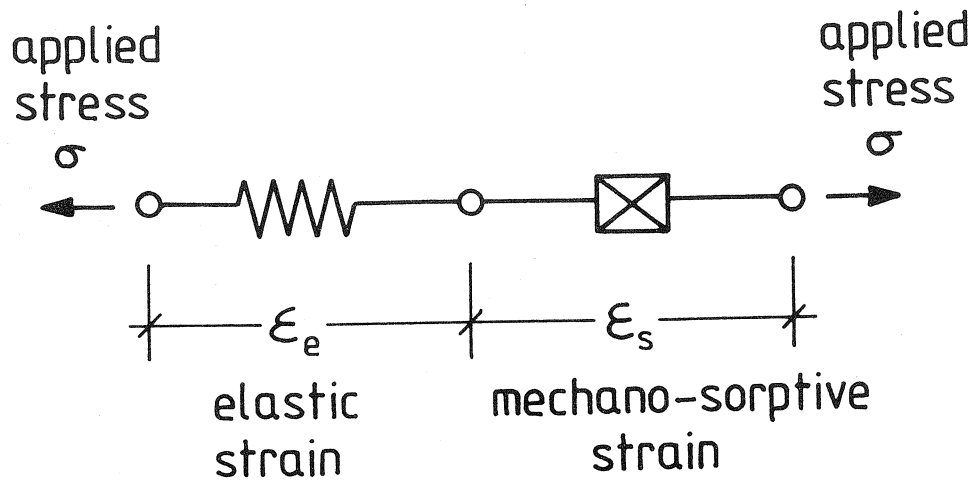


Figure 2 Rheological model for timber

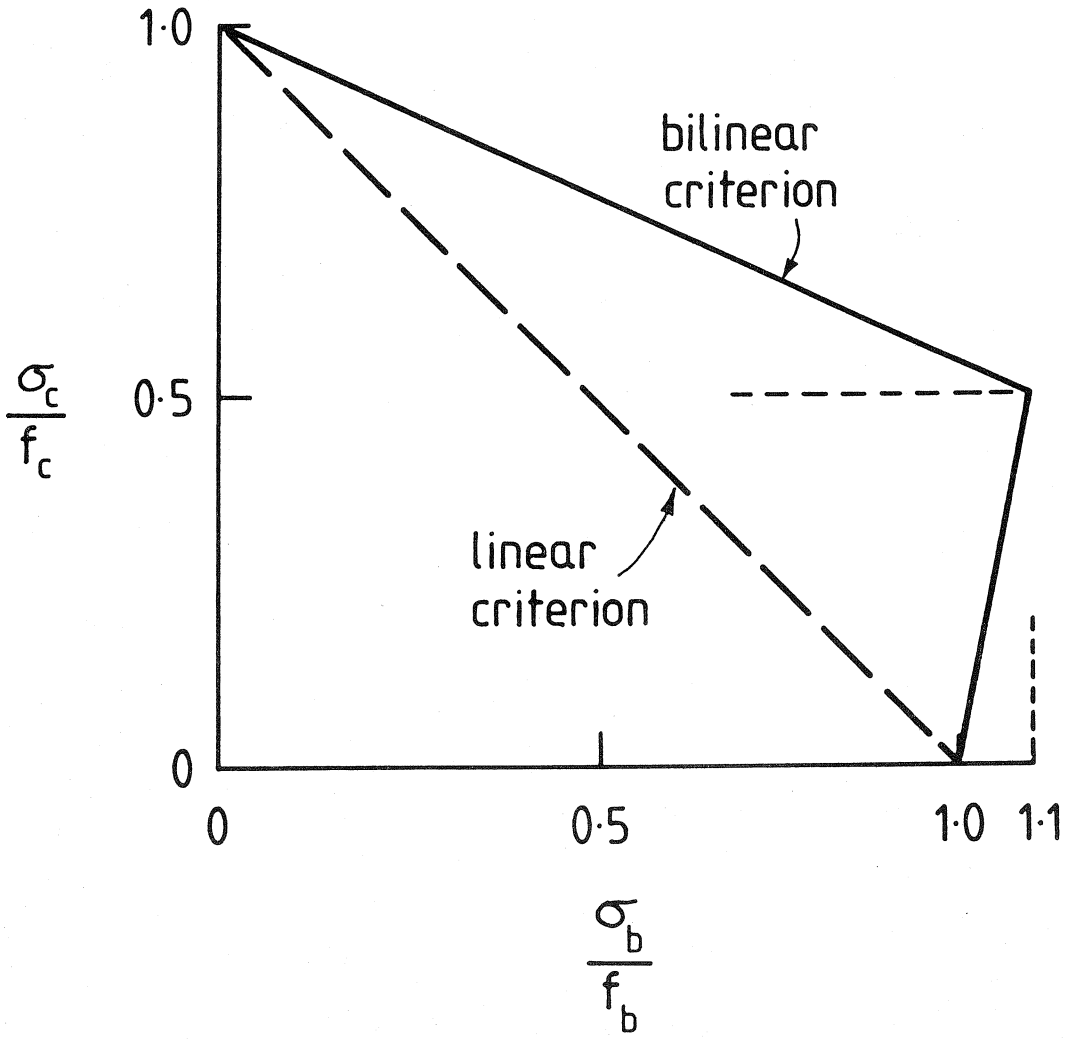


Figure 3 Failure criteria

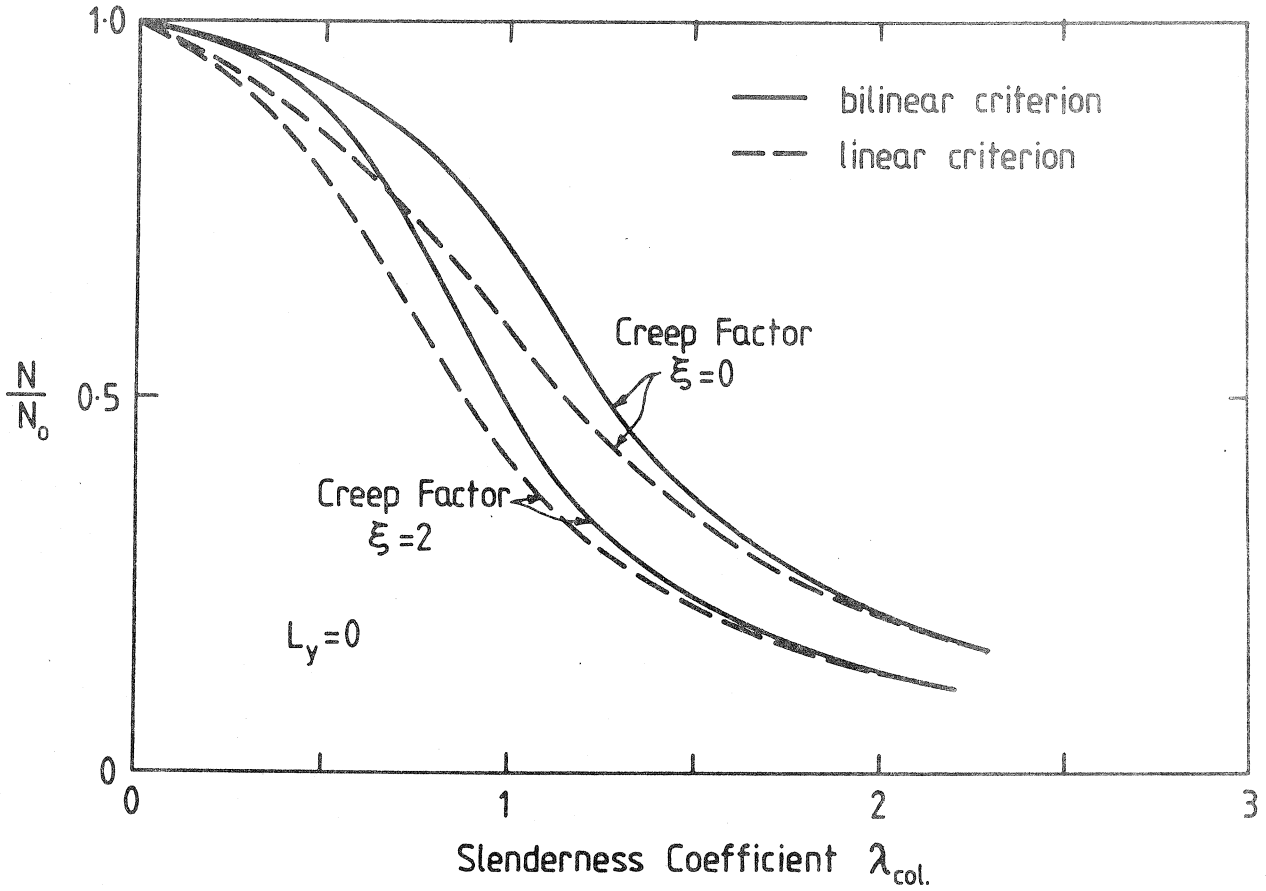


Figure 4 Uni-directional buckling strength of columns

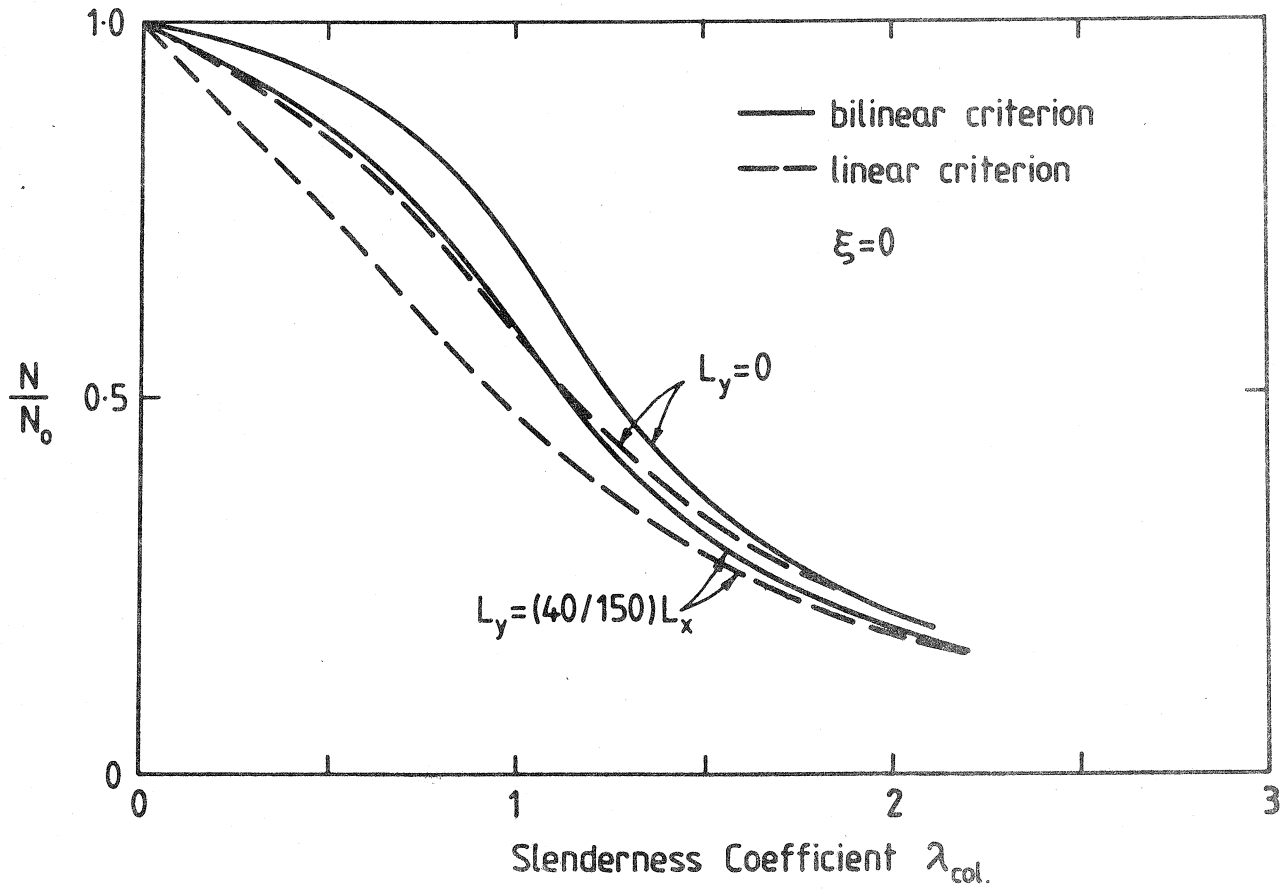


Figure 5 Comparison between uni-directional and biaxial buckling

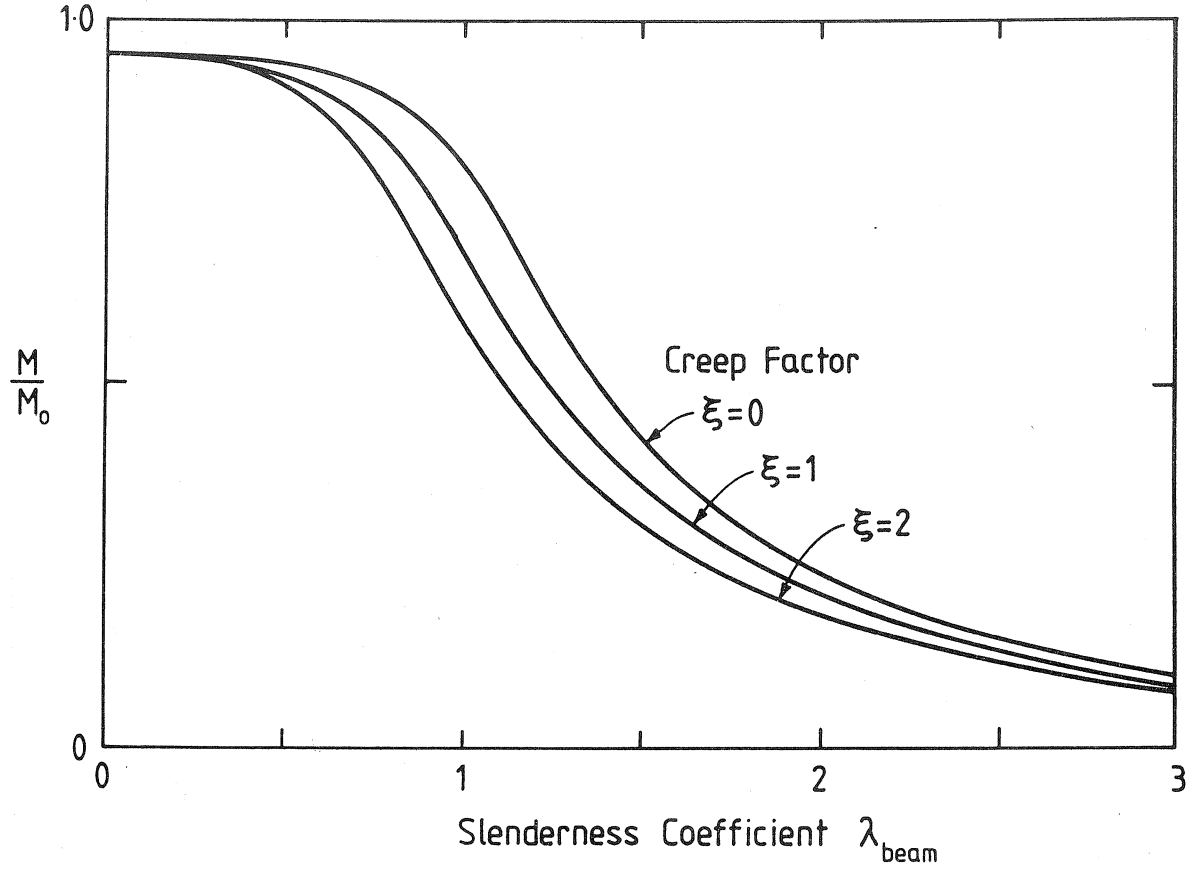


Figure 6 Buckling strength of beams

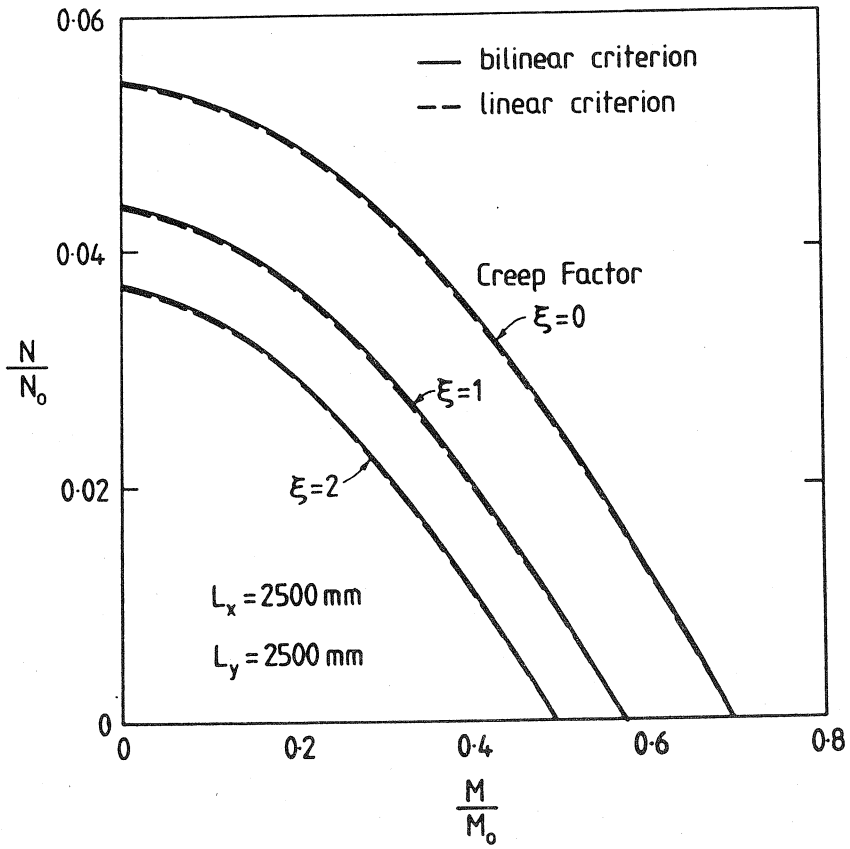


Figure 7 Strength interaction curves for beam-columns; $L_x$ = 2500, $L_y$ = 2500

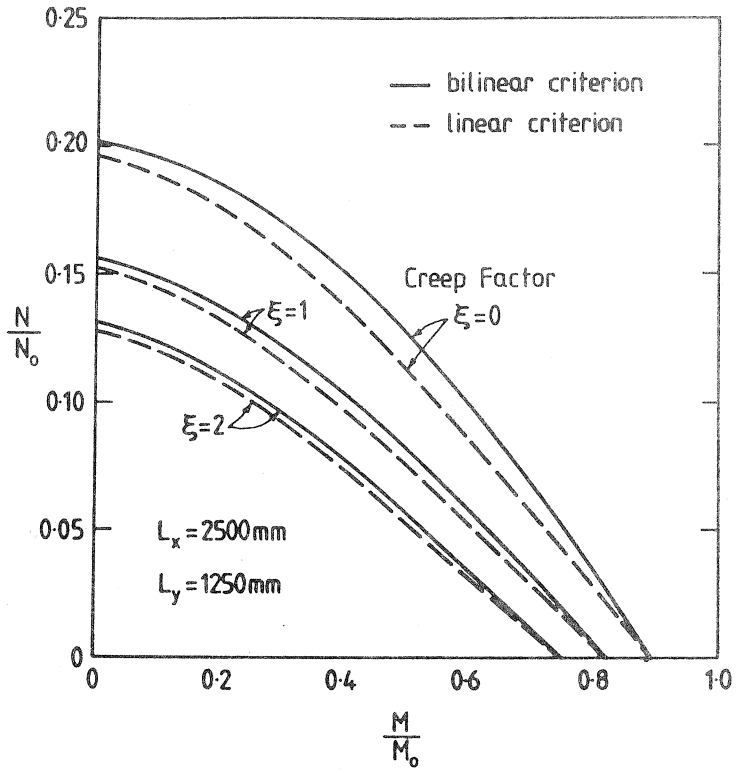


Figure 8 Strength interaction curves for beam-columns;
$L_x$ = 2500, $L_y$ = 1250

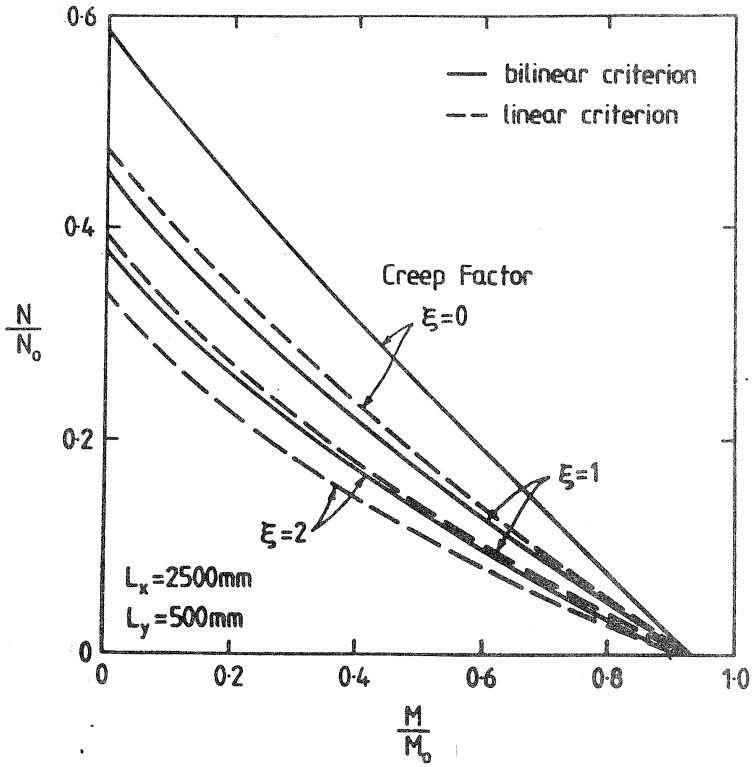


Figure 9 Strength interaction curves for beam-columns;
$L_x$ = 2500, $L_y$ = 500

CIB-W18/19-5-1

INTERNATIONAL COUNCIL FOR BUILDING RESEARCH STUDIES AND DOCUMENTATION

WORKING COMMISSION W18 - TIMBER STRUCTURES

# STRESS-GRADING BY ECE STANDARDS OF ITALIAN-GROWN DOUGLAS-FIR DIMENSION LUMBER FROM YOUNG THINNINGS

by

L Uzielli
University of Florence
Italy

MEETING NINETEEN
FLORENCE
ITALY
SEPTEMBER 1986

# STRESS-GRADING BY ECE STANDARDS OF ITALIAN-GROWN DOUGLAS-FIR DIMENSION LUMBER FROM YOUNG THINNINGS

by Luca UZIELLI

## Abstract

One hundred specimens of Italian-grown Douglas-fir dimension lumber (73x73x2000 mm), air-seasoned at 12% MC, have been tested in one-third point bending for MOR and MOE. Specimens have also been graded according to ECE Recommended Standard on stress-grading of coniferous sawn timber (1983), but neglecting the rate of growth limitation, and accordingly establishing three (hypothetical) grades DS6, DS8, DS10.
Resulting fifth-percentile values for MOR (calculated on three-parameter Weibull distribution) are respectively 13.1, 22.2, 24.7 N/mm2, and corresponding MOE values for mechanical stress-grading are approximately 7000, 11500, 12500 N/mm2. Values of DS8 and DS10 (hypothetical) grades are too near, and if similar results will emerge from further research, new grading rules will need to be worked out for Italian-grown Douglas-fir.

## Foreword

Douglas-fir artificial stands have been widely planted in Italy in the last 40 years, and especially in the last 20 years; presently over 10 000 hectares are growing, mainly in the Central and Southern Appenines (CIANCIO et al.,1981-82).

Lumber from commercial thinnings is starting to be more and more available and appreciated in the country.

As in many other areas, italian Douglas-fir shows very good specific gravity and strength properties, despite its quick growth; but no data are yet available concerning engineering properties and stress-grading of dimension lumber.

This paper reports the initial results of a research program on italian-grown Douglas-fir dimension lumber, still in progress, aiming to evaluate its engineering properties (mainly MOR, MOE and shear modulus), and to establish data for stress-grading it, both visually and mechanically.

## Sampling and conditioning

One hundred Douglas-fir specimens, 80x80 mm in section and 2 m in length, sawn from logs coming from a commercial thinning, have been random sampled from a sawmill's production, air-seasoned at 12% MC, and planed at 73x73 mm.

At time of thinning the stand (located in Casentino region - central Italy, near Florence - at altitude of 1000 m above sea level) was 18 years old; although exact origin of seeds is unknown, trees belong to "green" douglas-fir variety ( Pseudotsuga menziesii (Mirb.) Franco).

## Grading

Specimens have been accurately inspected, and the main defects in every 25 cm interval have been measured and recorded, according to the rules laid in Italian Standard UNI 8198 (1981-84), derived from ECE Recommended Standard for Stress-Grading of coniferous sawn timber (1983).

The following defects have been recorded for each 25 cm interval:
- Total KAR (TKAR)
- Marginal KAR (MKAR)
- Shakes
- Wane
- Grain angle
- Resin pockets and inbarks

For each specimen, Rate of Growth (average width of annual rings) has been measured at both ends and averaged; crook and twist have also been measured.

As the purpose of the research was to explore relationships between non destructive properties (both visual and mechanical) and strength of specimens, the lumber has been graded not according to the main defect (grade-determining defect) independently of its location in the specimen, but according to the main defect detectable in the most stressed part (50 cm long) of each specimen; as a consequence, being specimen 2 m long, and bending span only 1.45 m long, it has been possible to select the stressed zones so that several KAR values were represented.

Visual grading has been performed according to the above mentioned UNI 8198 (and to the ECE Standard, which is perfectly equivalent), with the only exception that the Rate of Growth limitation (not more than 6 mm average width of annual rings for grades S8 and S10, not more than 10 mm for grade S6) has been disregarded. Because of such difference, the resulting (hypothetical) grades have been identified with the symbols DS6, DS8, DS10: except that there is no Rate of Growth limitation, the DS6, DS8, DS10 grades exactly coincide with ECE grades S6, S8, S10.

The results of grading the specimens according to ECE standard, with and without the Rate of Growth limitation, is shown in Table 1 .

## Testing

Specimens have been tested for modulus of elasticity (MOE) and modulus of resistance (MOR) in approximately one-third point bending ( 145 cm span, 50 cm between symmetrical loads).

Provisions of ISO 8375 have been followed as strictly as possible.

The span-to-depth ratio was 19.86:1. Loads and deflections were continuously plotted on an X-Y chart recorder, through an LVDT transducer mounted on a yoke at specimen's neutral axis, and a strain-gage load cell.

The testing machine cross-head displacement rate was constant, and such that failure occurred in 1 to 2 minutes.

The load-deflection curves were recorded after three loading cycles to 5000 Newton (approximately 1/3 of ultimate load), and showed fairly good linearity.

The fracture types have also been recorded, for future analysis.

The TKAR and MKAR of the closest 25 cm interval have been associated with the fracture; only in a few cases, depending upon fracture size and shape, some subjective judgement has been needed to identify the fracture-causing defect or the associated TKAR-MKAR.

Two transverse sections were cut from close to the fracture zone, for determination of moisture content (MC) and specific gravity (SG); one of the two specimens was measured, weighed and oven-dried integer, the other was cut in three layers, to check for MC gradients along the thickness ( Figure 1 ).

Some tests and measurements have also been performed on small clear specimens cut from the test pieces, after rupture; whenever possible ISO standards have been followed.

## Calculations

Calculations have been performed, on an Apple IIe computer, according to the following methods:

- MOR and MOE (uncorrected for shear), for each specimen, as specified in ISO 8375
- MC as percentage, based on oven-dry mass
- SG based on mass and volume at 12% MC
- Regressions, by the least-squares method
- Weibull 3-parameter distribution, by the maximum likelihood estimation method (PIERCE,1976).

## Results

The main results obtained from testing, for the whole group of 100 specimens and for the DS6, DS8, and DS10 (hypothetical) grades previously described, are given in

Table 2 ; some regressions between the most significant parameters (MOE, MOR, TKAR, MKAR) are also given, in Figures 2 , 3 , 4, 5 .

Three-parameter Weibull distribution has been fit to MOR data for each grade; the resulting parameters and the lower 5 percent limit (95 percent confidence) are shown in Table 3 , whereas frequency distribution histograms and superimposed Weibull curves are shown in Figures 6, 7, 8 .

In Figure 2 is also shown a graphical derivation of limit values for MOE, to be used as settings in a stress-grading machine, in order to obtain the (hypothetical) mechanical stress grades DMS6, DMS8, DMS10 with the same procedure stated by ECE Standard (... three machine stress grades ... MS10, MS8, MS6, which have the same stress values in bending as the corresponding S10, S8, and S6 visual grades).

## Conclusions

Results obtained from the tested sample show that ECE Standard grades could also be used for Italian-grown Douglas-fir coming from commercial thinnings, provided that no Rate of Growth limitation is applied.

However, 5th-percentile values of MOR for DS8 and DS10 (hypothetical) grades are so near to each other (resp. 24.68 and 22.19 N/mm2), thate there seems to be no practical purpose in keeping them separate; on the contrary, the 5th-percentile value of MOR for the DS6 (hypothetical) grade (13.09 N/mm2) appears well distinct.

Should similar results be obtained from further samples, new grading rules will need to be worked out for Italian-grown Douglas-fir dimension lumber, if the distinction in three strength grades will be considered worth to be maintained.

---

I gratefully acknowledge the help of my former students Antonello Amodei and Carmine Cropanese, who performed the actual testing and calculations.

This research was funded by Italian Ministry of Agriculture and Forests.

## BIBLIOGRAPHY


CIANCIO O., MERCURIO R., NOCENTINI S., 1981-82 - Exotic forest tree species in Italian silviculture . Annali Ist. Sperimentale per la Selvicoltura, vol. XII-XIII, Arezzo

FAO-ECE, 1983 - ECE Recommended standard for stress-grading of coniferous sawn timber . Timber Bullettin for Europe, vol. XXXIV supplement 16, Geneva

ISO, 1984 - ISO 8375 "Solid timber in structural sizes - Determination of some physical and mechanical properties , Geneva

PIERCE C.B., 1976 - The Weibull distribution and the determination of its parameters for application to timber strength data . BRE Current Paper CP 26/76, Princes Risborough

UNI (Italian Organisation for Standardisation), 1981-84 - UNI 8198-1981 "Segati di conifere -Classificazione in base alla resistenza meccanica", con aggiornamento 1984 . Milano

TABLE 1

Results of grading the 100 specimens according to the unmodified ECE Standard (i.e. with the limitations for Rate of Growth: RoG $\leq$ 6 mm for S8 and S10 ; RoG $\leq$10 mm for S6), and according to the same ECE Standard, modified (i.e. without the RoG limitations).

| RULE ADOPTED | GRADE | NUMBER OF SPECIMENS IN THE GRADE |
|---|---|---|
| unmodified ECE Standard (with RoG limitations) | S6 | 77 |
| | S8 | 3 |
| | S10 | 4 |
| | n.q. | 16 |
| modified ECE Standard (without RoG limitations) | DS6 | 27 |
| | DS8 | 29 |
| | DS10 | 36 |
| | n.q. | 8 |

n.q.= does not qualify for any grade

TABLE 2

Main results obtained from testing, for the whole group of 100 specimens and for the DS6, DS8, DS10 (hypothetical) grades (see Table 1 and text).

| GROUP OR GRADE | N° | AVE | S.D. | MIN | MAX |
|---|---|---|---|---|---|
| All specimens: | | | | | |
| MOR (N/mm2) | 100 | 41.0 | 15.1 | 13.3 | 85.4 |
| MOE (N/mm2) | 100 | 10165 | 3063 | 4699 | 16482 |
| MC (%) | 100 | 11.8 | 0.94 | 10.5 | 13.6 |
| SG (g/cm3) | 100 | .45 | .148 | .33 | .56 |
| RoG (mm) | 100 | 7.65 | 1.78 | 4 | 13 |
| Grades: | | | | | |
| DS6 MOR (N/mm2) | 27 | 27.2 | 9.5 | 18.1 | 53.2 |
| DS8 MOR (N/mm2) | 29 | 42.3 | 10.6 | 30.9 | 70.6 |
| DS10 MOR (N/mm2) | 36 | 52.4 | 12.1 | 27.5 | 83.3 |
| DS6 RoG (mm) | 27 | 7.37 | 1.71 | 4 | 11 |
| DS8 RoG (mm) | 29 | 8.24 | 1.81 | 5 | 12 |
| DS10 RoG (mm) | 36 | 7.28 | 1.75 | 4 | 13 |

TABLE 3

Results from fitting a three-parameter Weibull distribution to MOR data of (hypothetical) grades DS6, DS8, DS10, by the maximum likelihood estimation method (PIERCE, 1976):

C = location parameter
K = shape parameter
D = scale parameter
MOR(.05) = lower 5 percent limit (95% confidence) for MOR
MOE(.05) = limit values for MOE, corresponding to MOR(.05), derived graphically in Fig. 2

| GRADE | C (N/mm2) | K | D (N/mm2) | MOR(.05) (N/mm2) | MOE(.05) (N/mm2) |
|---|---|---|---|---|---|
| DS6 | 11.018 | 1.461 | 15.824 | 13.09 | 7000 |
| DS8 | 17.138 | 1.912 | 23.909 | 22.19 | 11500 |
| DS10 | 7.676 | 3.232 | 42.638 | 24.68 | 12500 |

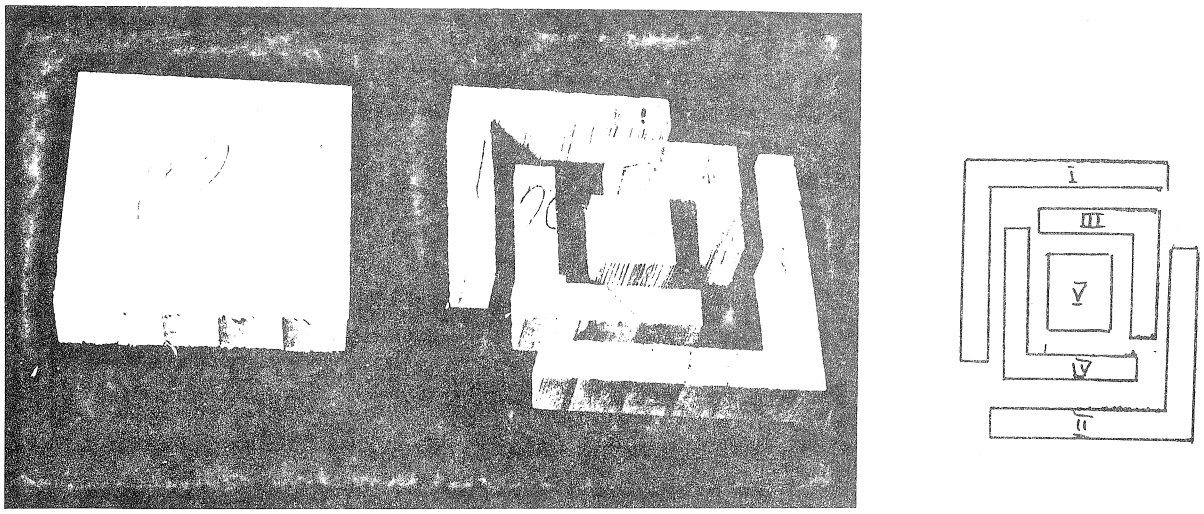


FIGURE 1
Transverse sections 73x73 mm, sampled close to the fracture zone, for determination of average Moisture Content and Specific Gravity (left), and of MC gradients along the thickness.

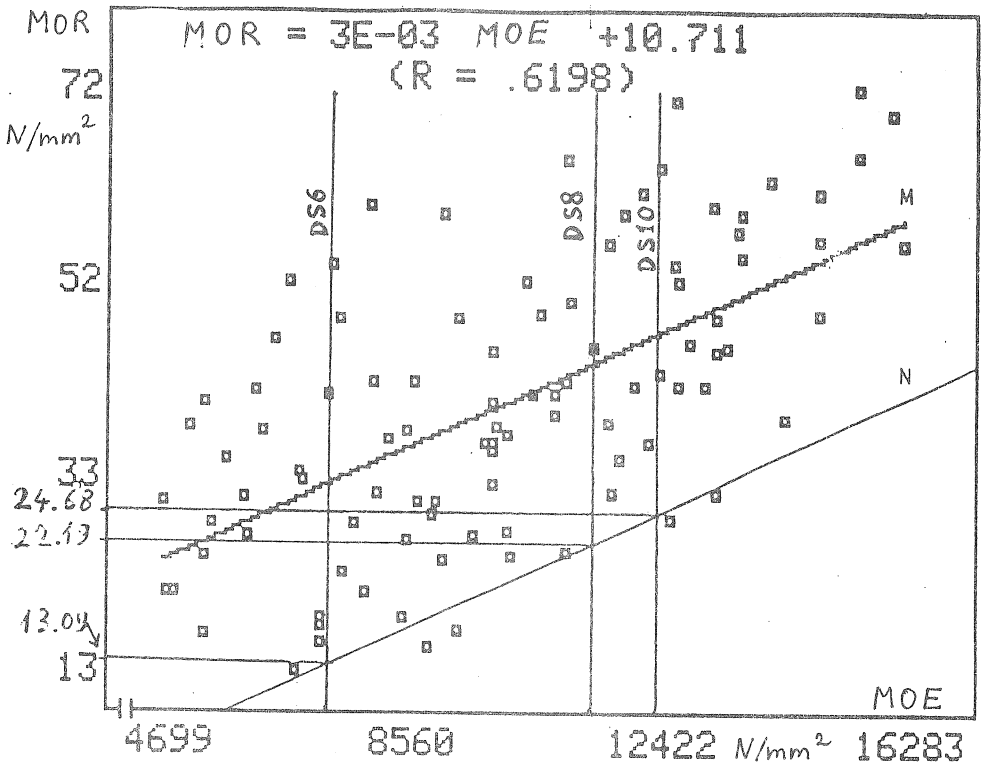


FIGURE 2
Regression of MOR on MOE, for the whole group of 100 specimens, and graphical derivation of limit values for MOE, in order to obtain (hypothetical) mechanical stress grades DMS6, DMS8, DMS10 with the same procedure stated by the ECE Standard (1983).

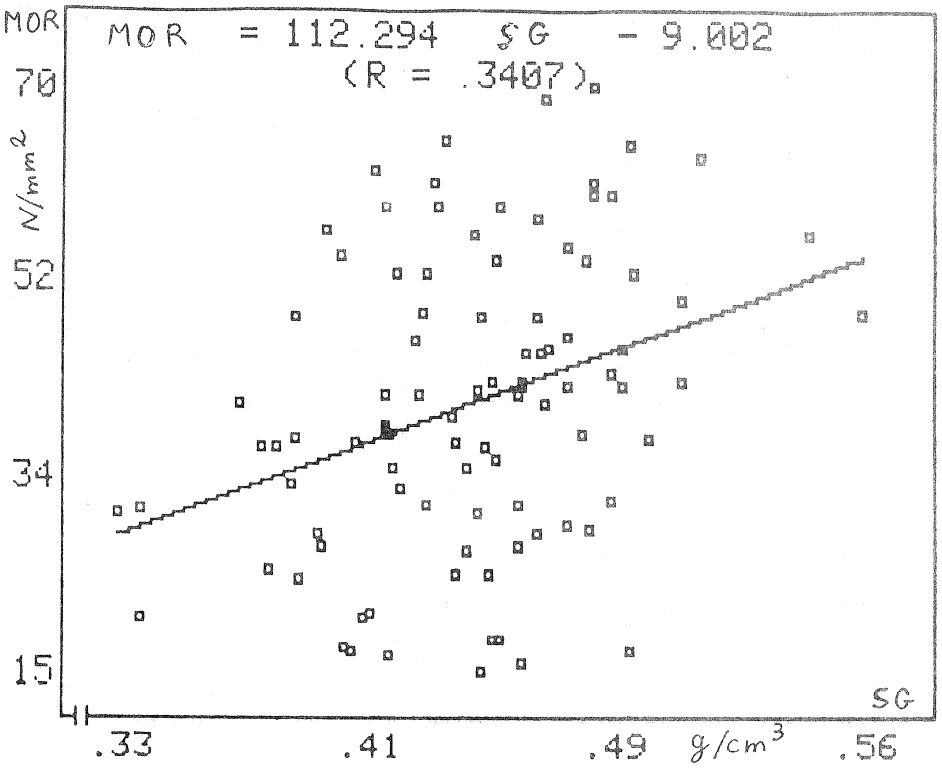


FIGURE 3
Regression of MOR on specific gravity SG.

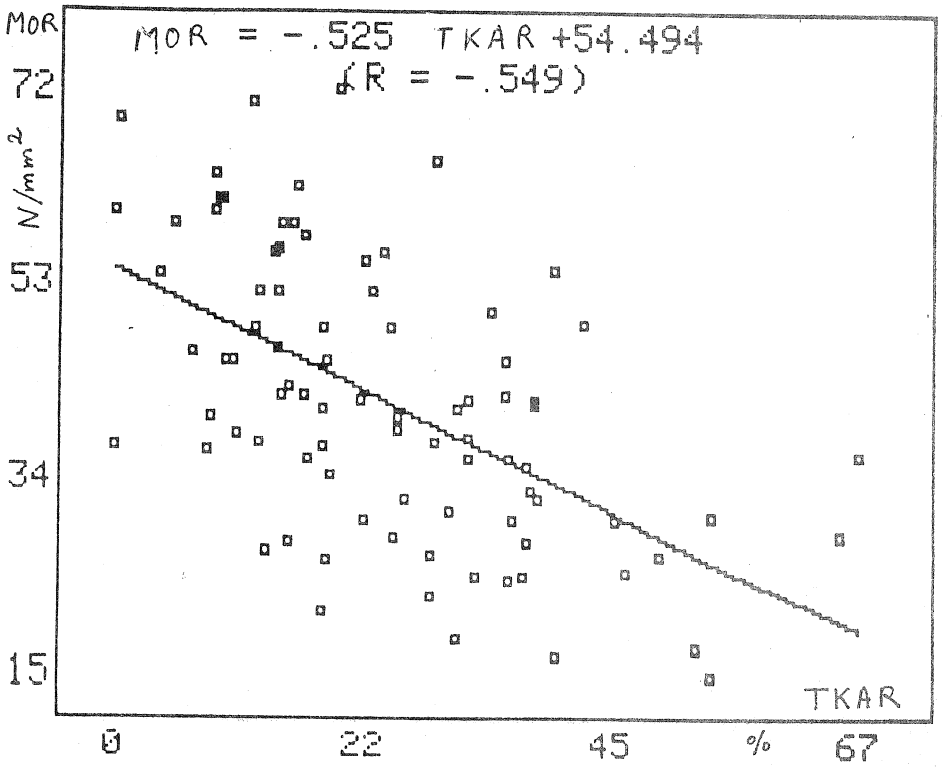


FIGURE 4
Regression of MOR on TKAR (largest value of Total Knot Area Ratio close to the fracture zone).

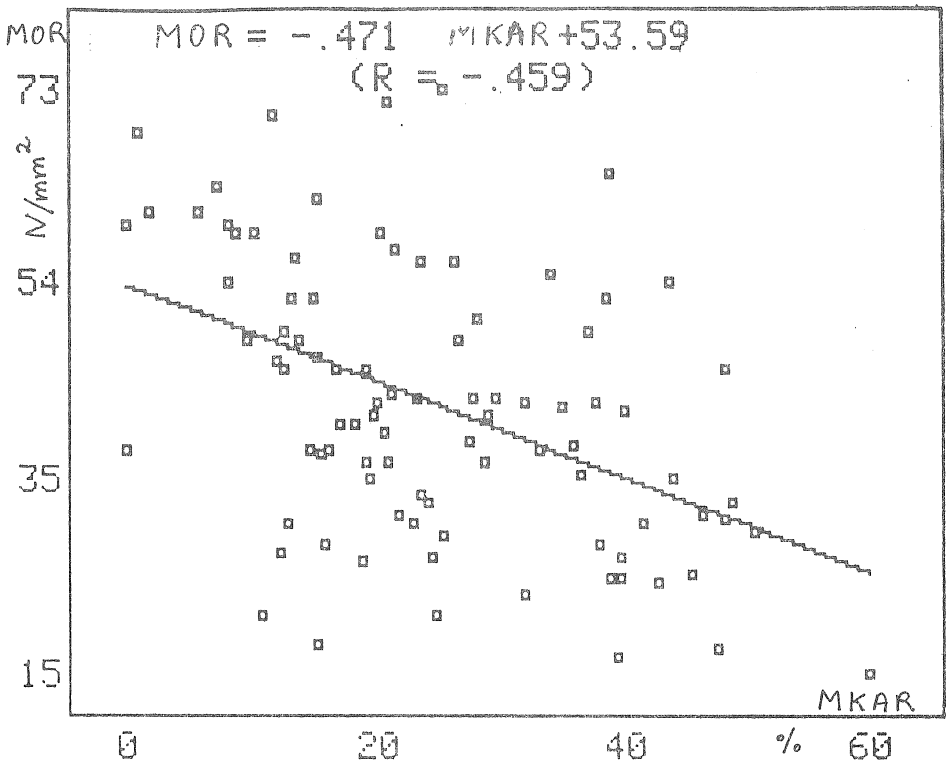


FIGURE 5
Regression of MOR on MKAR (largest value of Marginal Knot Area Ratio close to the fracture zone).

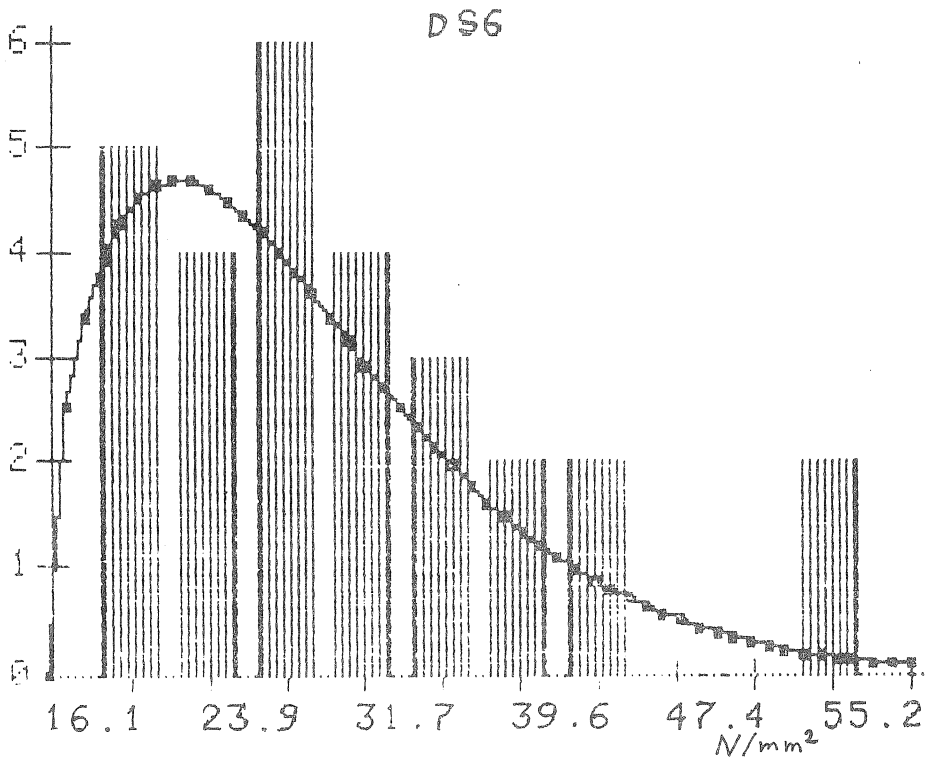


FIGURE 6
Frequency distribution histogram and superimposed three-parameter Weibull curve for the (hypothetical) visual grade DS6. (Y-axis scale is arbitrary)

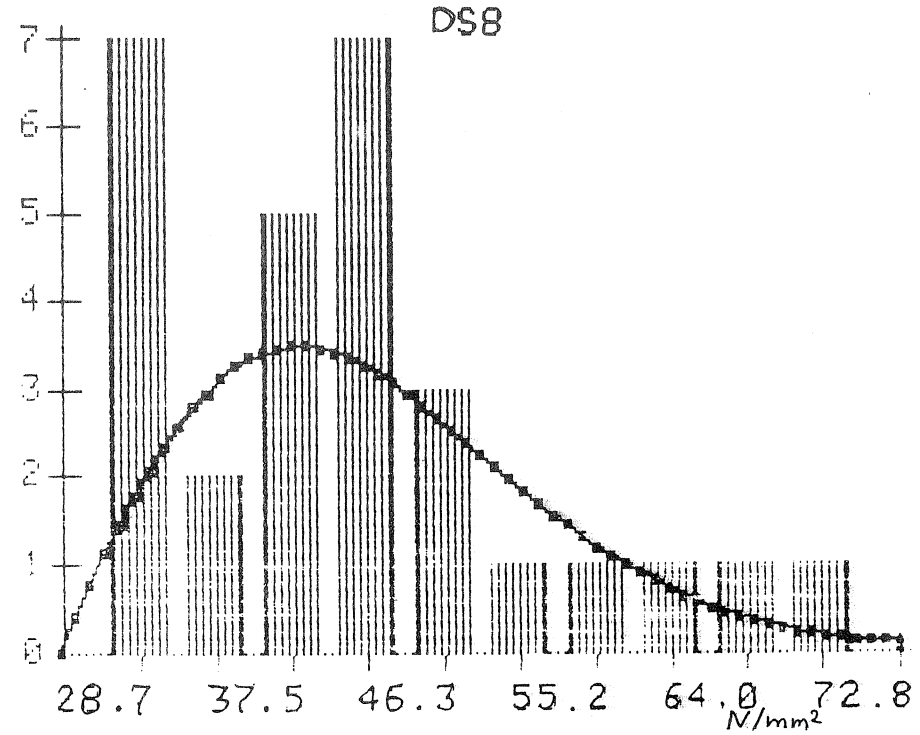


FIGURE 7
Frequency distribution histogram and superimposed three-parameter Weibull curve for the (hypothetical) visual grade DS8. (Y-axis scale is arbitrary)

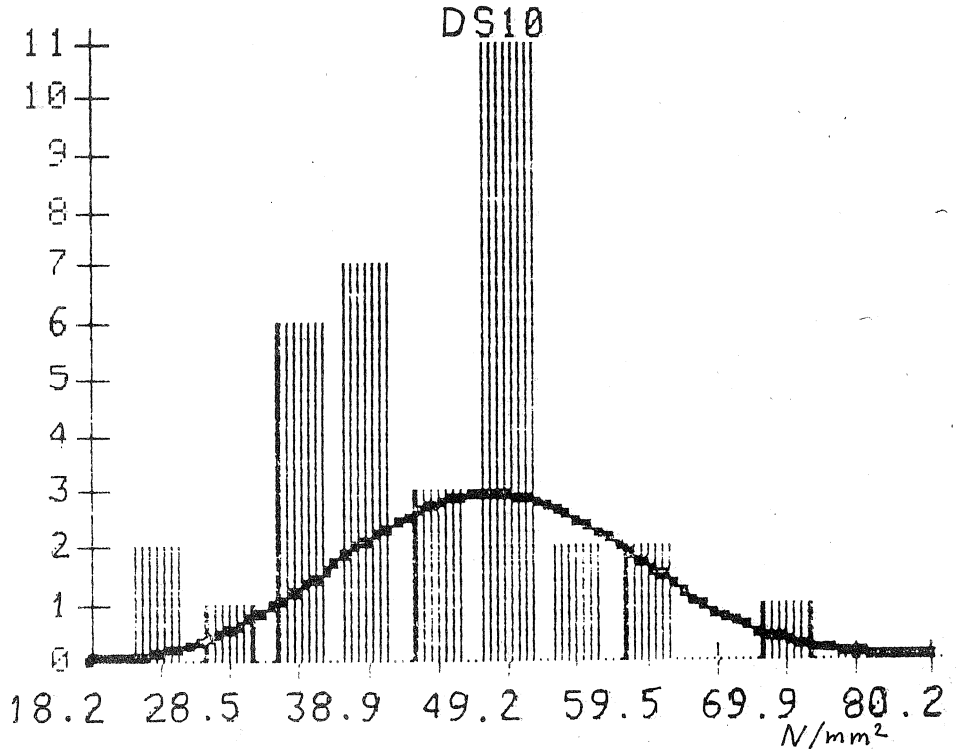


FIGURE 8
Frequency distribution histogram and superimposed three-parameter Weibull curve for the (hypothetical) visual grade DS10. (Y-axis scale is arbitrary)

CIB-W18/19-5-2

INTERNATIONAL COUNCIL FOR BUILDING RESEARCH STUDIES AND DOCUMENTATION

WORKING COMMISSION W18 - TIMBER STRUCTURES

# STRUCTURAL SOFTWOOD FROM AFFORESTATION REGIONS IN WESTERN NORWAY

by

R Lackner
Norwegian Institute of Wood Technology
Norway

MEETING NINETEEN
FLORENCE
ITALY
SEPTEMBER 1986

# F O R E W O R D

This paper is part of a comprehensive study on "Quality yield and working properties for sawn and planed timber of Norway spruce (*Picea abies Karst.*) and Sitka spruce ( *Picea sitchensis Carr.*)grown in the west-coast-regions of Norway" (by M. FOSLIE).

Climatically, the growing condtions in Western Norway are profitable to these wood species, the forests are growing very rapidly, producing low-density timber of large dimensions. As the strength and stiffness properties of wood are directly related to its density, there may occur problems by using low-density-timber in constructions.

The main objective of the investigations presented in this paper was to detect, if the strength- and stiffness properties of fast grown spruce could satisfy the values required by Norwegian Standard NS 3080 (Wood Quality, Grades) and NS 3470 (Timber Structures).

In the thirties an afforestation program was started in the western parts of Norway. Different species were planted, but the two most extensively used were Norway spruce (Picea abies) and Sitka spruce (Picea sitchensis). These new forests now produce sawlog dimensions. Studies of the properties and usefulness of these two main species have been performed.

The specific properties were studied by the different institutions* as follows:

| | Spruce | Sitka |
|---|---|---|
| Sawing properties | NTI | NTI |
| Kiln drying | NTI | NTI |
| Timber quality | NTI | NTI |
| Physical properties | | NISK |
| Strength | (NTI) | NISK |

The wood being used by NTI was selected by the local forest commissioners in the four western counties. In each county logs were sampled from two localities(Fig.1). The samples were supposed to be of "sawlog quality and dimensions comparable to what may be expected to be marketed in the near future". 400 logs of each species were sampled, evenly selected from the eight locations.

The logs were carried to a sawmill in Eastern Norway. The processing was observed and the quality of the material produced was studied. The grading were supplemented by some studies at sawmills in Western Norway.

Results can be summarized as follows:

WOOD QUALITY

The quality of the sawn material in relation to the log quality is dependent upon several factors:

1. The quality of the tree.
2. The classification of the log.
3. The cutting pattern used in the sawmill.
4. The grading of the sawn material related to stipulated usage.

At receival the logs were characterized as being of high quality, straight, round and with small taper. Annual rings however, were quite wide.

* NTI - The Norwegian Institute of Wood Technology
NISK - The Norwegian Forest Research Institute

The official grader gave the sawn material the following classification:

| ØS-grade | | Green wood | | Kiln dried wood | | |
|---|---|---|---|---|---|---|
| | | Sitka | Spruce | Sitka | Spruce | Spruce (eastern grown) |
| Third | US | 0 | 1 | 0 | 0 | 9 |
| Fourth | US | 20 | 27 | 16 | 19 | 49 |
| Fifth | | 53 | 56 | 59 | 73 | 28 |
| Sixth | | 27 | 16 | 25 | 8 | 14 |

The 3. and 4. grade combined (US) would normally give 50-60% of the number of deals.

The material from Western Norway gave for these two grades combined around 20%, less for the larger dimensions than for the smaller ones. The distribution differs somewhat between districts, but without significancy. The most important defects leading to low classification were:

Sound knots
Dead knots
Compression wood
Rot

After kiln drying the knots of the Sitka often had exceptionally large checks, some of them extending to the pith of the stem. The splay knots had a marked tendency to splinter during machining.

The Sitka material also showed a tendency to contain small surplus knots surrounding the larger ones in some pieces. These smaller knots are caused by epidormic shoots. The spruce on the other hand tended to have somewhat larger knots than those of the Sitka.

Compression wood was more pronounced for the spruce than for the Sitka. Its appearance however, was more patchwise along the whole deal than ordinarily observed in wood from Eastern Norway. Thus the surfaces often gave a somewhat discoloured appearance.

The Sitka contained some coloured heartwood but often in patches and stripes and vaguely marked. This compression wood could easily be judged as being rot and posed a problem for the grader.

## SAWING

The sawing process went on without any particular problems. Sitka however, demanded about 10% higher power consumption than did normal spruce from the surroundings of the sawmill. The spruce from Western Norway on the other hand demanded 8% less power than did the local spruce.

The Sitka seemed to be less easy to handle on machine tables as friction seemed considerably higher. This may be due to a fairly large slope of grain. The occurrence of raised fibers on one half of the sawn surface of materials split through the pith seems to support this statement. Some logs had a tendency to get stuck in the resaw, probably also because of the occurrence of a large slope of grain. Sawing of sitka furthermore gave a somewhat lower accuracy both for the deals and for the boards.

The spruce did not give any particular problems apart from being difficult to handle due to an extremely high water content and as a consequence of this a very high weight. This phenomenon may in turn give more wear of transport equipment.

## KILN DRYING

The material was dried in a chamber kiln together with local spruce and with a kiln schedule normally used for the local spruce.

Both western species seemed to need longer drying time than the eastern one and did not reach the moisture content specified. Drying defects were very small but as the specified dryness was not obtained this result should not be regarded as conclusive.

Because of its greater slope of grain the sitka material was expected to give more twisting which is a common observation as well. Such an excessive twisting was not observed, however.

PLANING

The planing results were not very good mainly due to two reasons:

1. Defects in the wood itself
2. The planing process

The wood defects may cause the planed wood to get a low quality classification ( knots with cracks, ingrown bark, dead knots etc.) but they may also contribute to poor planing quality due to tear out etc.

The planing proved to be fairly difficult because of the low density wood and the very hard knots. Thus, the planing operations, being performed on a Jonsered machine, gave a poor planing quality. Torn fibers were one of the main faults. Sitka seemed to give poorer results than did the spruce. Some few boards were replaned using a larger cutting angle which seemed to give a better surface quality.

In the following table the total quality results (%) for natural defects as well as for planing are given:

| Wood species | Sitka | | | Spruce | | |
|---|---|---|---|---|---|---|
| Dimension | 12x95 | 15x145 | 15x195 | 12x95 | 15x145 | 15x195 |
| Good | 16% | 0% | 0% | 73% | 3% | 0% |
| Medium | 51% | 43% | 55% | 27% | 84% | 60% |
| Poor | 33% | 57% | 45% | 0% | 0% | 36% |
| Rejects | 0% | 0% | 0% | 0% | 13% | 3% |

The results indicate that the smaller dimensions give the best results.

PALLETS

A smaller test was made to ascertain whether this wood would provide necessary hold for pallet nails. Based on the Europall specification withdrawal strength seems to be satisfactory.

## STRENGTH

Originally, the research program did not impair strength- and stiffness testing on spruce. As such data were desired, a small number of planks in commercial dimensions were tested in bending strength and modulus of elasticity. The number of specimens is too small to provide conclusive results, nevertheless it should give some indications. The testresults are given in table 1 - 4, linear regression lines between a number of parameters are calculated and shown in fig. 2 - 3.

The characteristic bending strength values calculated on the basis of these test results are considerably lower than what the construction rules prescribe.
Given a larger sample the calculated distribution may be somewhat smaller and the characteristic strength value accordingly higher but it seems doubtful whether the strength will satisfy the limits defined in the construction rules. In consequence this may demand the use of larger dimensions.

## BASIS OF COMPARISON

The question of whether fast grown wood from Eastern Norway will yield the same low density and low strength values as observed in the material from Western Norway has been raised. Based on the situation at present it seems reasonable to believe that for some years the main bulk of wood produced in Eastern Norway still will have densities and strength properties as those used for comparison in this study. For future knowledge however, studies should be made for planted trees in the eastern counties as well.

## DEFINITIONS and ABBREVIATIONS

| | | |
|---|---|---|
| RHO | ($kg/m^3$) | Density ,calculated at u = 17 % m.c. |
| SIG | (MPa) | Ultimate bending strength $\sigma_{b8}$ |
| MOE | (MPa) | Modulus of Elasticity |
| KAR | ( % ) | Knot Area Ratio |
| AAR | ( mm ) | Width of growth ring |
| KLASSE E, S | | Structural Timber Grade acc. to NS 3080 and NS 3470 |
| n | | Number of specimens |
| x | | Mean value |
| s | | Standard deviation |
| V | | Coefficient of variation |
| $x_{kstr.}$ | | calculated characteristic design value, incl. duration of load |
| $x_{kstr.norm}$ | | required charcteristic design value (acc. to Timber Structure Code NS 3470) |

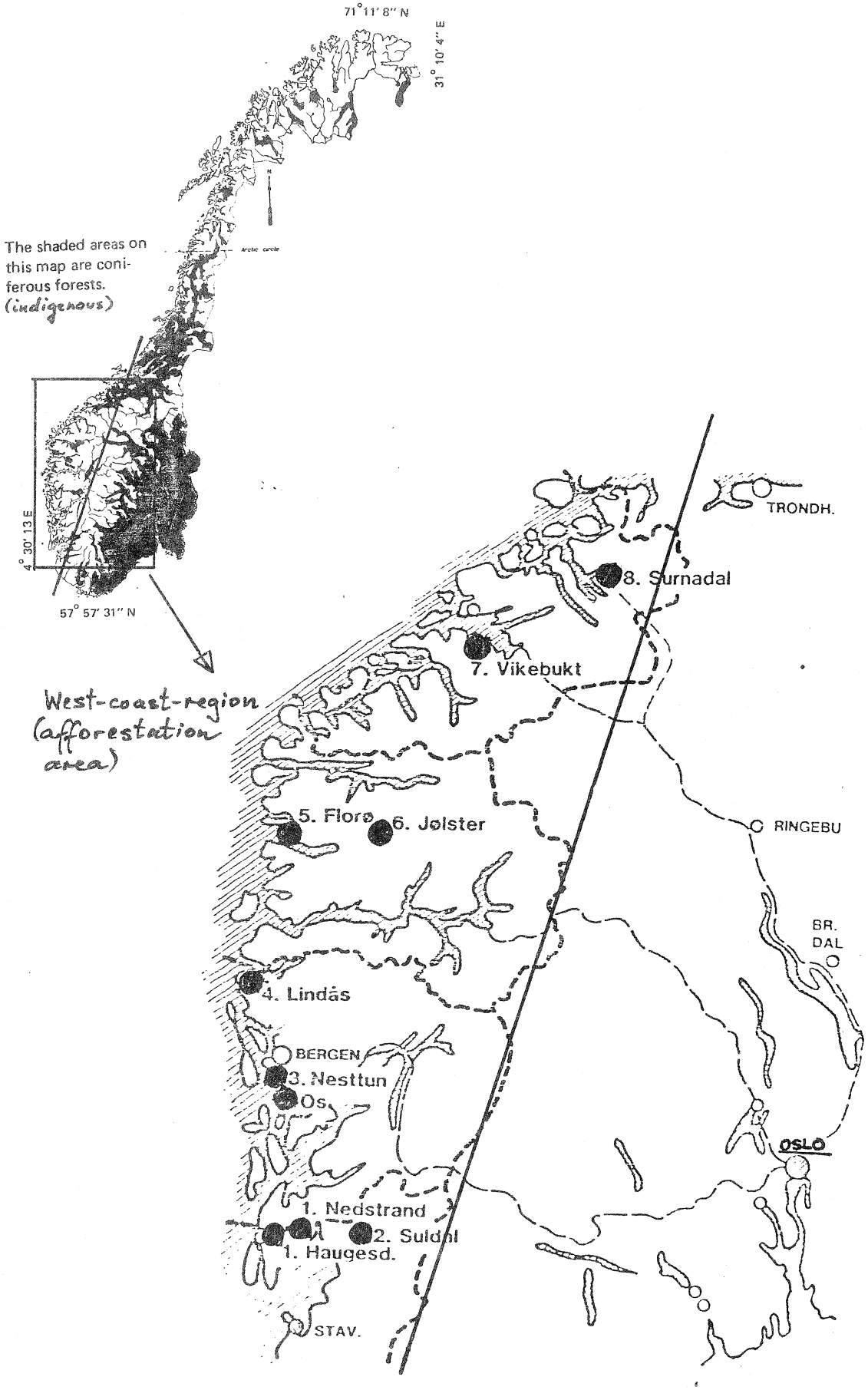


Fig. 1. Map showing origin of test material

TABLE 1.

GRAN FRA VESTLANDET, 75 x 200 MM, NS 3080 KLASSE E ("T 30")
Spruce from westcoast, 75 x 200 mm, NS 3080, grade E ("T 30")

| | Antall<br>Number<br>n | Maks.-verdi<br>Greatest sing. value<br>$x_{max}$ | Middelverdi<br>Mean<br>$\bar{x}$ | Min.verdi<br>Lowest sing. value<br>$x_{min}$ | Standardavvik<br>Standard dev.<br>s | Var.koef<br>Coeff.of var.<br>V (%) | Konstr.fasth.<br>Constr. value<br>$x_{kstr}$ | Konstr.fasth. norm.<br>Constr. code value<br>$x_{kstr.\ norm}$ |
|---|---|---|---|---|---|---|---|---|
| Densitet u ≈ 17 %($g/cm^3$)<br>Density | 24 | 0,486 | 0,423 | 0,381 | 0,0247 | 7 | - | - |
| Fukt grav. $u_{grav}$ (%)<br>Moisture, grav. | 24 | 15,0 | 15,7 | 16,3 | 2,0 | 13 | - | 15 |
| Årringbredde a (mm)<br>Annual ring width | 24 | 4,9 | 3,8 | 2,4 | 0,6 | 15 | - | 5 |
| Projisert kvistareal (%)<br>Knot area ratio(KAR) | 23 | 26 | 16 | 6 | 5,3 | 33 | | |
| Bøyefasthet $\sigma_b$ (MPa)<br>Bending strength | 24 | 54 | 39 | 22 | 7,6 | 20 | 16 (!) | 20 |
| Bøye-E-Modul $E_b$ (MPa)<br>Modulus of elasticity | 24 | 12900 | 10200 | 7800 | 1400 | 14 | 5000 | 5000 |

Relation between parameters is shown in fig. 2.

TABLE 2.
GRAN FRA VESTLANDET, 75 x 200 mm, NS 3080 KLASSE S ("T 24")
Spruce from westcoast, 75 x 200 mm, NS 3080 grade S ("T 24")

| | Antall<br>Number<br>$n$ | Maks.-verdi<br>Greatest sing. value<br>$x_{max}$ | Middelverdi<br>Mean<br>$\bar{x}$ | Min.verdi<br>Lowest sing. value<br>$x_{min}$ | Standardavvik<br>Standard dev.<br>$s$ | Var.koef<br>Coeff.of var.<br>$V$ (%) | Konstr.fasth.<br>Constr. value<br>$x_{kstr}$ | Konstr.fasth. norm.<br>Constr. code value<br>$x_{kstr.\ norm.}$ |
|---|---|---|---|---|---|---|---|---|
| Densitet u ≈ 17 % ($g/cm^3$)<br>Density | 20 | 0,511 | 0,415 | 0,360 | 0,334 | 10 | - | - |
| Fukt grav. $u_{grav}$ (%)<br>Moisture, grav | 20 | 16,6 | 15,8 | 14,4 | 0,5 | 3,2 | - | - |
| Årringbredde a (mm)<br>Annual ring width | 20 | 5,3 | 4,4 | 3,4 | 0,65 | 15 | - | - |
| Projisert kvistareal(%)<br>Knot area ratio(KAR) | 20 | 38 | 25 | 9 | 6 | 26 | - | - |
| Bøyefasthet $\sigma_b$ (MPa)<br>Bending strength | 20 | 42 | 29 | 20 | 7 | 22,3 | 11 (!) | 16 |
| Bøye-E-Modul $E_b$ (MPa)<br>Modulus of elasticity | 20 | 12200 | 9200 | 6800 | 1600 | 17.0 | 4100 | 4000 |

Relation between parameters is shown in fig. 2.

TABLE 3.

GRAN FRA VESTLANDET, 50 x 100 mm, NS 3080 KLASSE E ("T 30")
Spruce from westcoast, 50 x 100 mm, NS 3080 grade E ("T 30")

| | Antall<br>Number<br>n | Maks.-verdi<br>Greatest sing. value<br>$x_{max}$ | Middelverdi<br>Mean<br>$\bar{x}$ | Min.verdi<br>Lowest sing. value<br>$x_{min}$ | Standardavvik<br>Standard dev.<br>s | Var.koef<br>Coeff.of var.<br>V (%) | Konstr.fasth.<br>Constr. value<br>$x_{kstr}$ | Konstr.fasth. norm.<br>Constr. code value<br>$x_{kstr.\ norm}$ |
|---|---|---|---|---|---|---|---|---|
| Densitet u ≈ 17 % ($g/cm^3$)<br>Density | 16 | 0,476 | 0,432 | 0,367 | 0,0279 | 8 | - | - |
| Fukt grav. $u_{grav}$ (%)<br>Moisture, grav | 16 | 15,0 | 14,6 | 13,9 | 0,38 | 3 | - | 15 |
| Årringbredde a (mm)<br>Annual ring width | 16 | 4,5 | 2,9 | 1,9 | 0,62 | 21 | - | 5,0 |
| Projisert kvistareal(%)<br>Knot area ratio(KAR) | 19 | 25 | 16 | 6 | 6,0 | 38 | - | - |
| Bøyefasthet $\sigma_b$ (MPa)<br>Bending strength | 19 | 63 | 48 | 31 | 10,0 | 21 | 19 | 20 |
| Bøye-E-Modul $E_b$ (MPa)<br>Modulus of elasticity | 19 | 14000 | 11800 | 9500 | 1800 | 15 | 5600 | 5000 |

Relation between parameters is shown in fig. 3.

TABLE 4.

GRAN FRA VESTLANDET, 50 x 100 mm, NS 3080, KLASSE S ("T 24")

Spruce from westcoast, 50 x 100 mm, NS 3080 grade S ("T 24")

| | Antall<br>Number<br>n | Maks.-verdi<br>Greatest sing. value<br>$x_{max}$ | Middelverdi<br>Mean<br>$\bar{x}$ | Min.verdi<br>Lowest sing. value<br>$x_{min}$ | Standardavvik<br>Standard dev.<br>s | Var.koef<br>Coeff.of var.<br>V (%) | Konstr.fasth.<br>Constr. value<br>$x_{kstr}$ | Konstr.fasth. norm.<br>Constr. code value<br>$x_{kstr.\ norm}$ |
|---|---|---|---|---|---|---|---|---|
| Densitet u ≈ 17 % ($g/cm^3$)<br>Density | 16 | 0,466 | 0,419 | 0,370 | 0,0301 | 9 | - | - |
| Fukt grav. $u_{grav}$ (%)<br>Moisture, grav. | 16 | 15,2 | 14,8 | 12,6 | 0,6 | 4 | - | 15 |
| Årringbredde a (mm)<br>Annual ring width | 16 | 4,7 | 3,5 | 2,9 | 0,52 | 15 | - | - |
| Projisert kvistareal(%)<br>Knot area ratio(KAR) | 18 | 36 | 29 | 23 | 3,8 | 13 | - | - |
| Bøyefasthet $\sigma_b$ (MPa)<br>Bending strength | 18 | 47 | 35 | 22 | 6,6 | 19 | 14 | 16 |
| Bøye-E-Modul $E_b$ (MPa)<br>Modulus of elasticity | 18 | 11500 | 8600 | 5900 | 1600 | 18 | 3700 | 4000 |

Relation between parameters is shown in fig. 3.

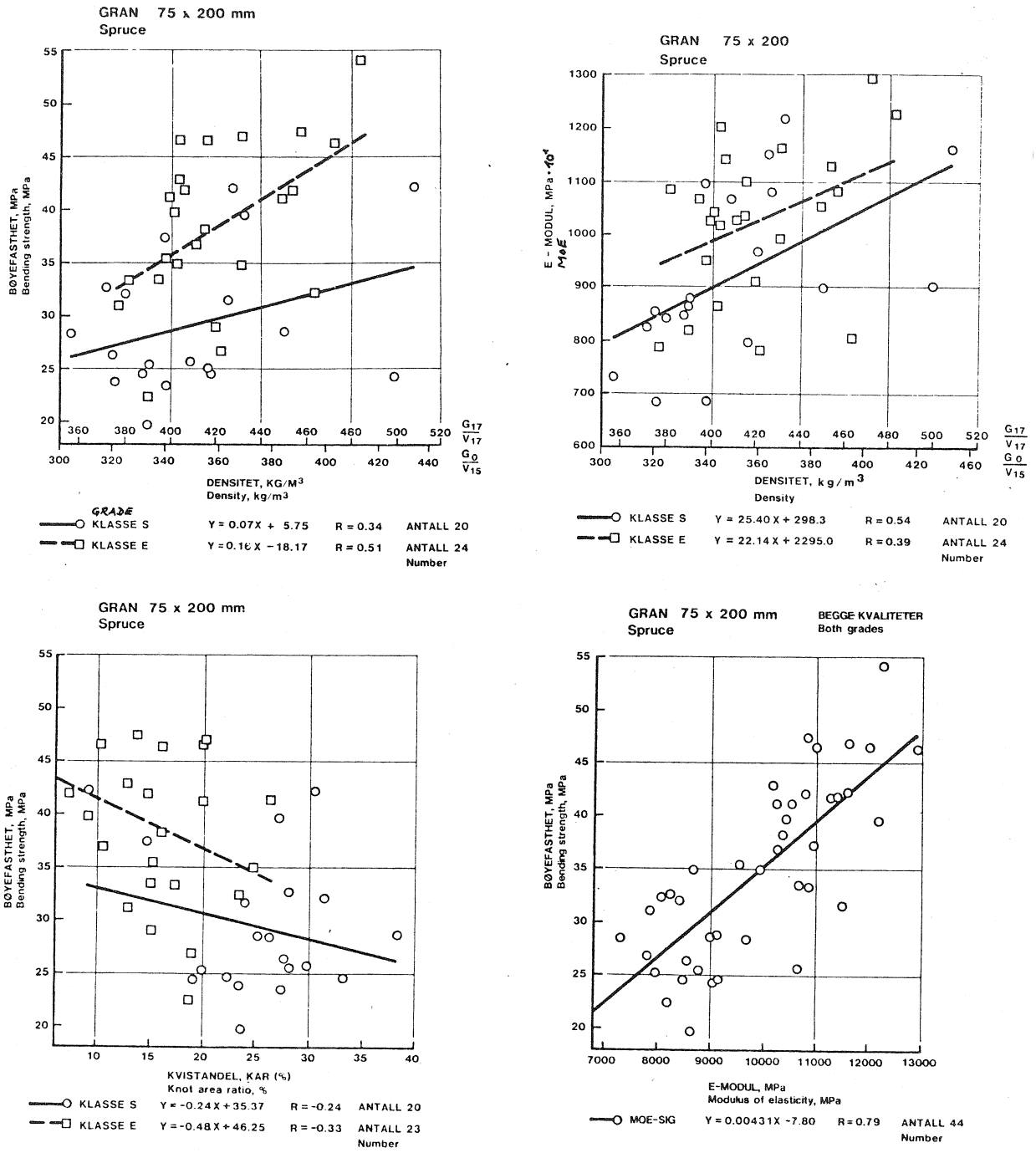


Figure 2. Relation between parameters on 75x200 spruce.

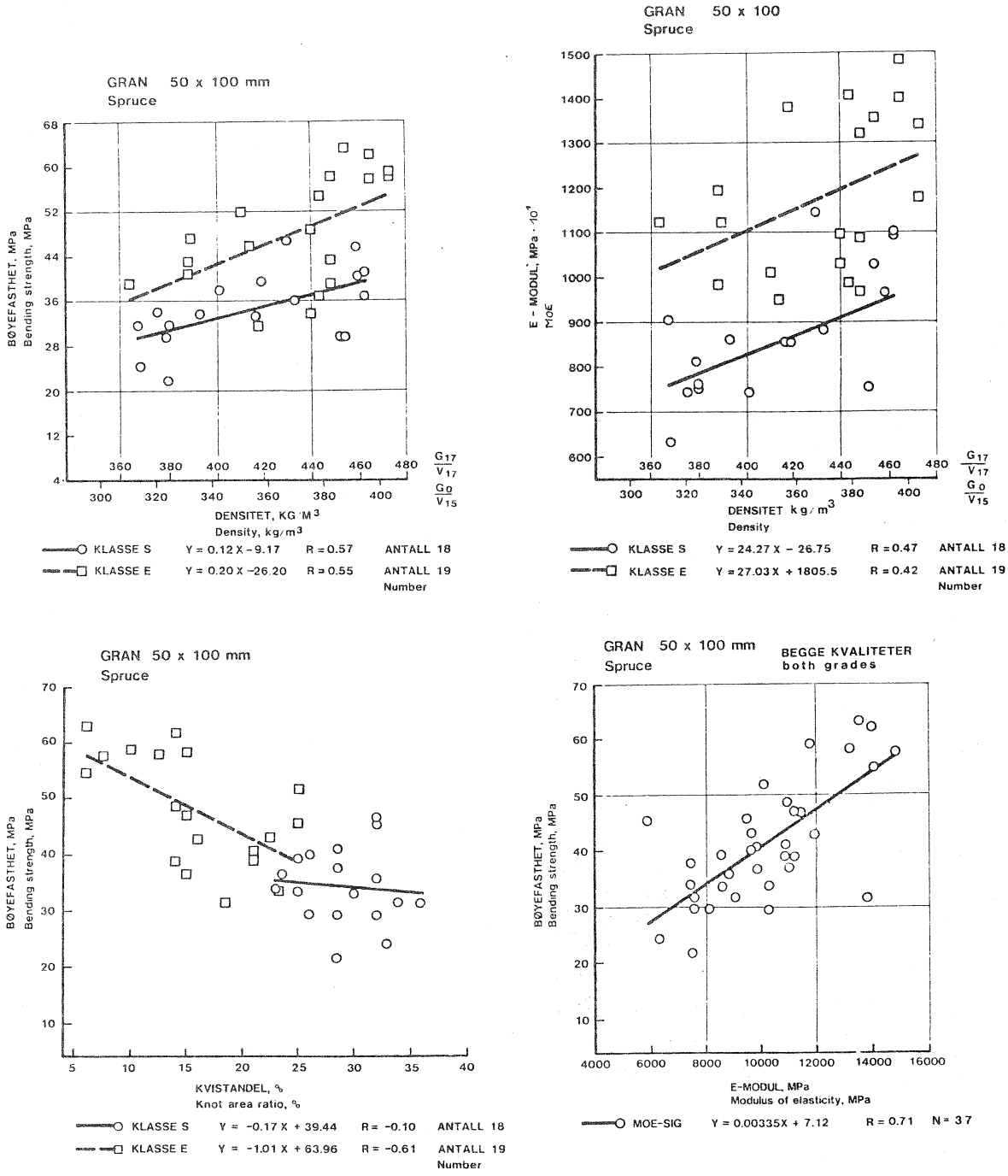


Figure 3. Relation between parameters on 50x100 mm spruce.

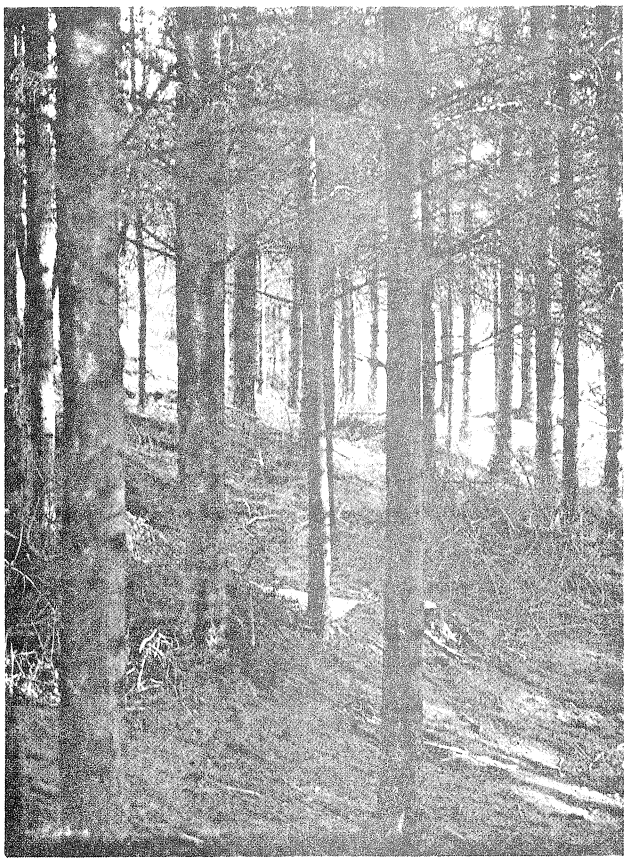

Tørrkvisten har lett for å sitte på, selv i tett bestand.
Dead branches have a tendency not to break off, even on tight-standing trees.

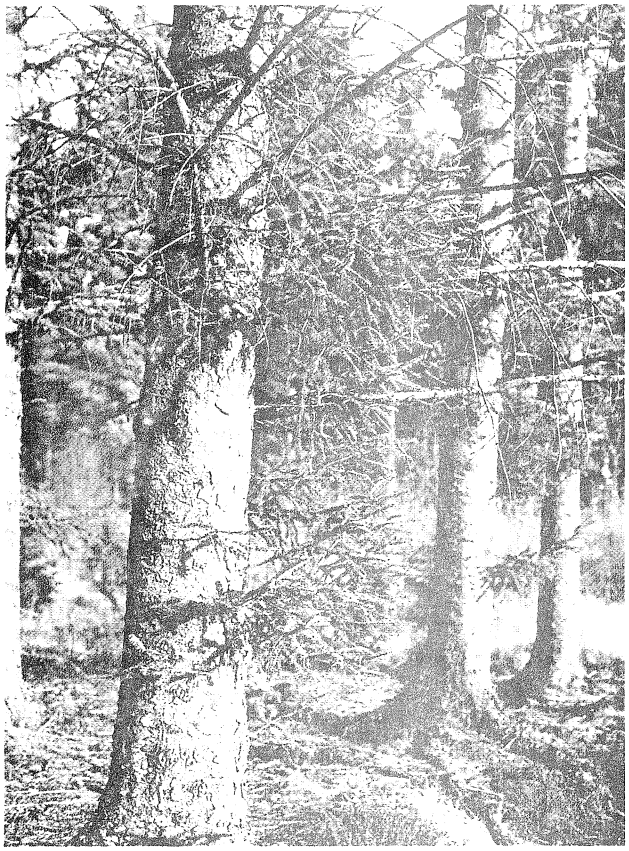

Fristilt sitka gir lett vannris.
Thinning of sikta forest often results in watersprouts.

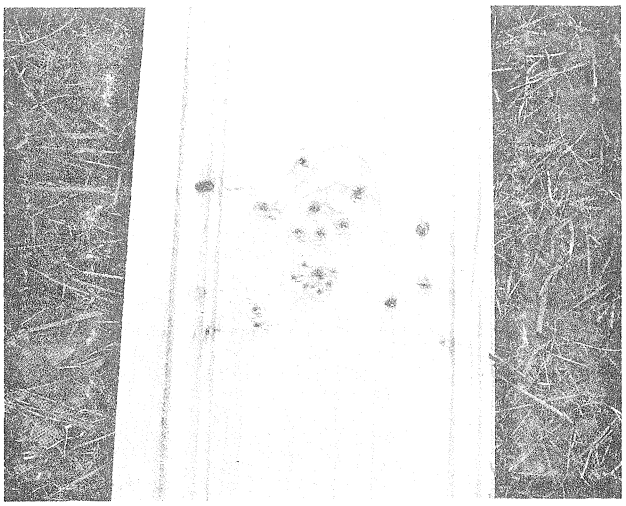

Vannris kan føre til mange ekstra småkvister i tillegg til de normale.
Watersprouts can lead to lots of small knots near the ordinary ones.

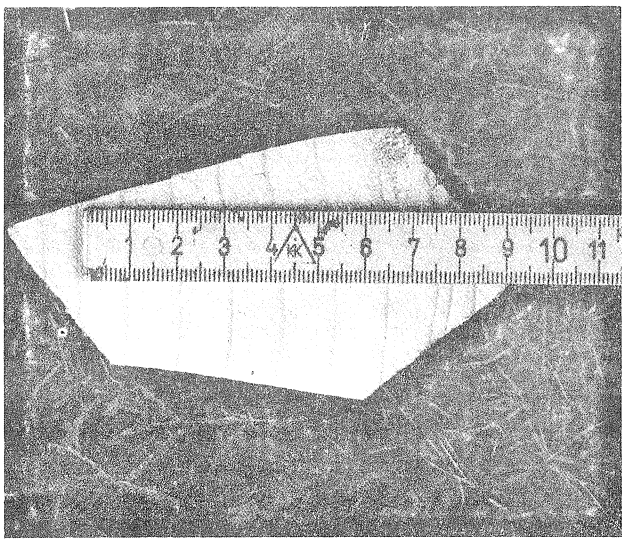

Årringene kan være svært store og med minimal sommerved-andel.
Annual rings can be very wide and with a minimal latewood-percentage.

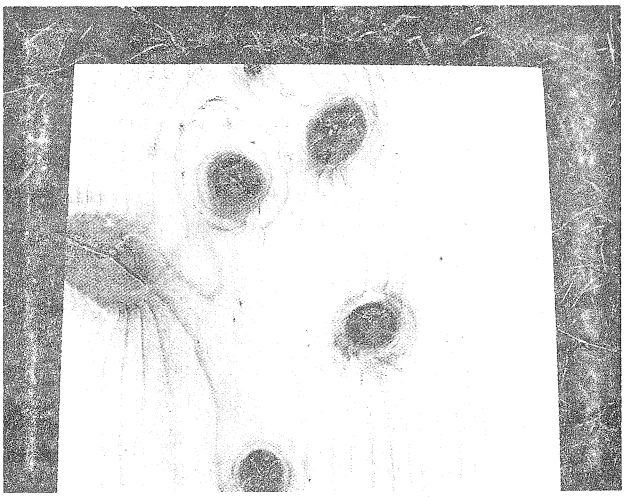

Kvistansamlinger i sitka kan være temmelig drøye.
Knotclusters in sitka can be rather large.

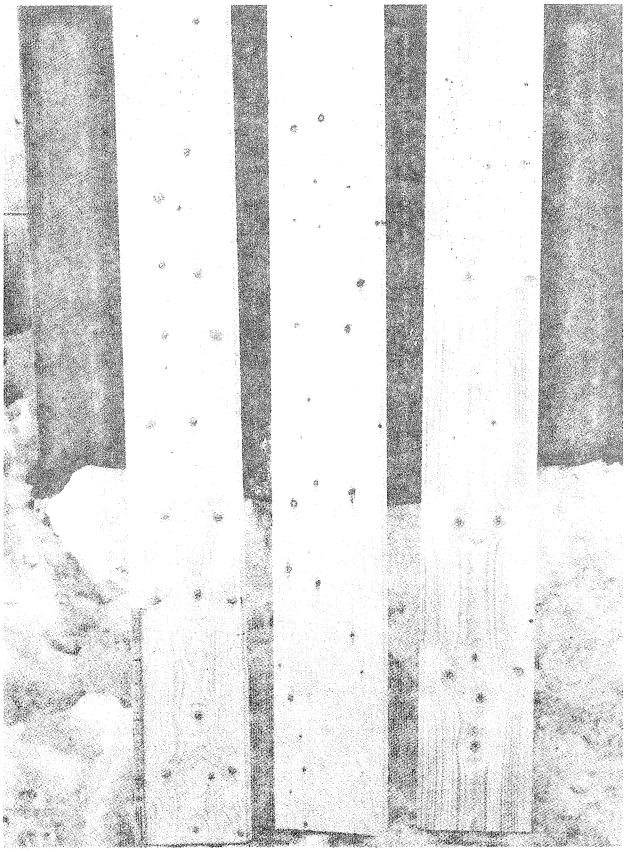

Også vanlig gran kan ha mye tørrkvist. Bordet til venstre har de typiske "tennarskjolder".

Not only sitka, but spruce from the westcoast as well, can have lots of dead knots. The board to the left has typical compression wood giving an impression of discolouration.

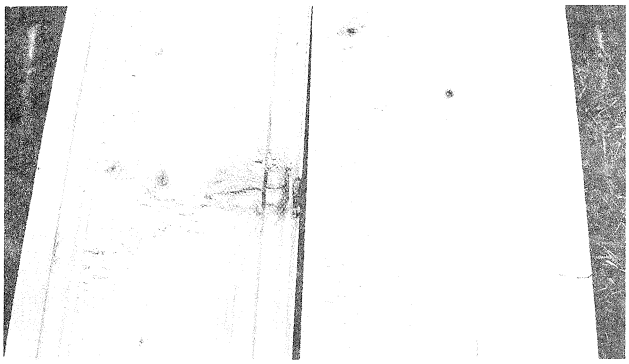

Tennar i grenfestene.

Compression wood under each branch.

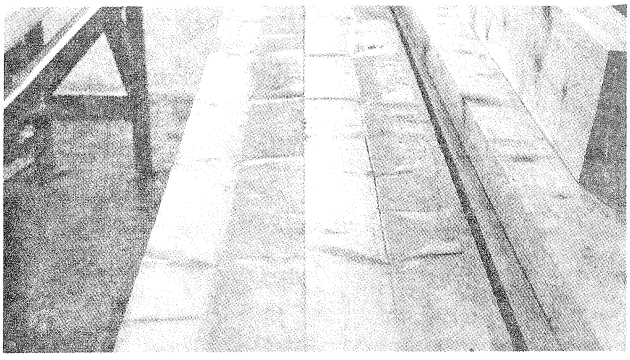

Særlig grov ragg på den ene siden av margen hos sitka.

Very coarse shag on one side of the pith on sitka.

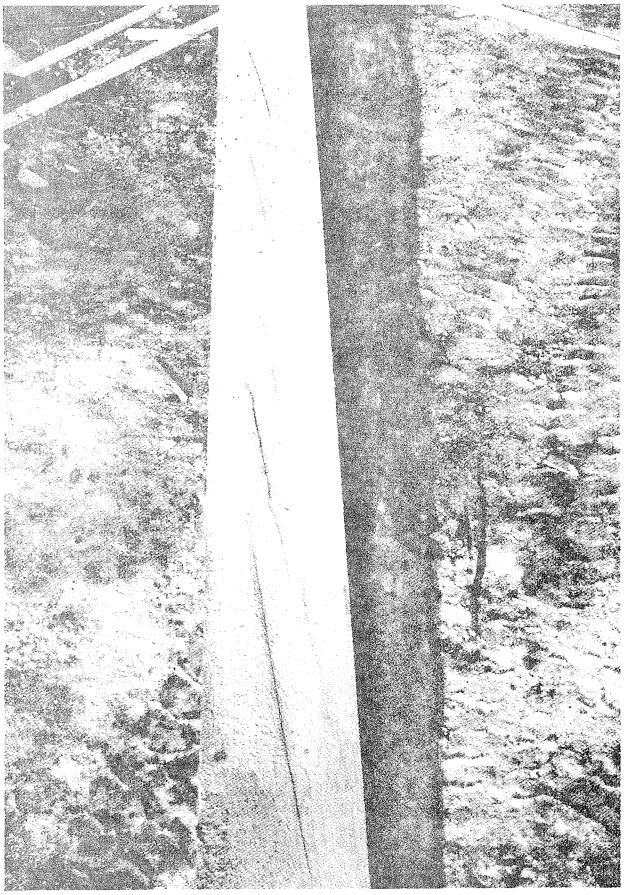

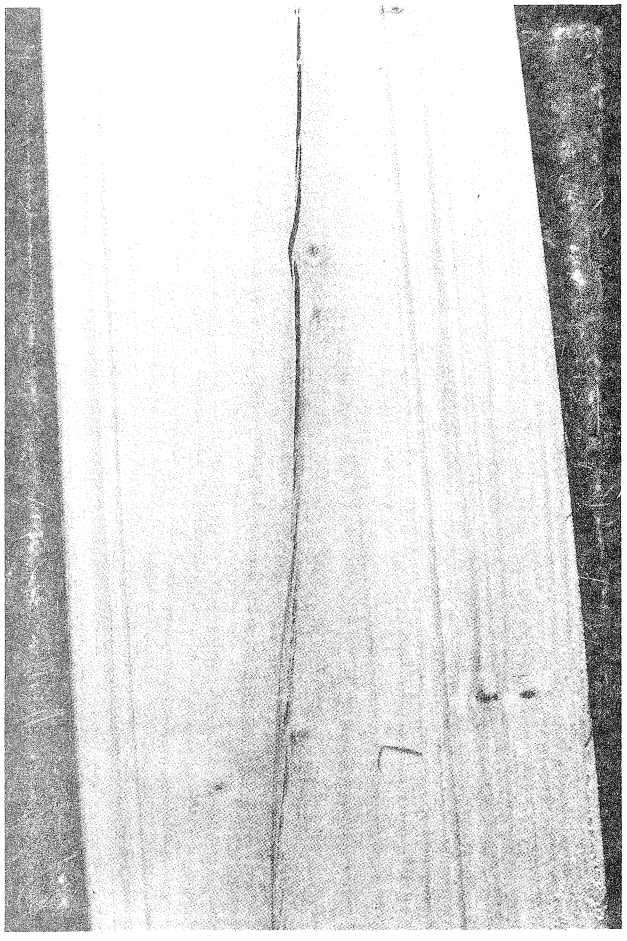

Uforklarlige "indre sprekker" i sitka, ofte med brun markering omkring.

Some pieces of sitka had inner cracks for which we can give no explanation.

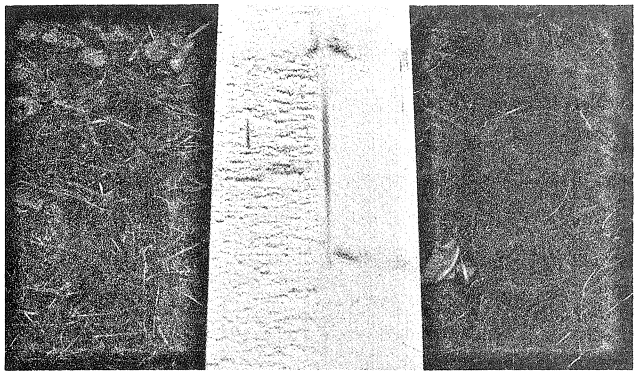

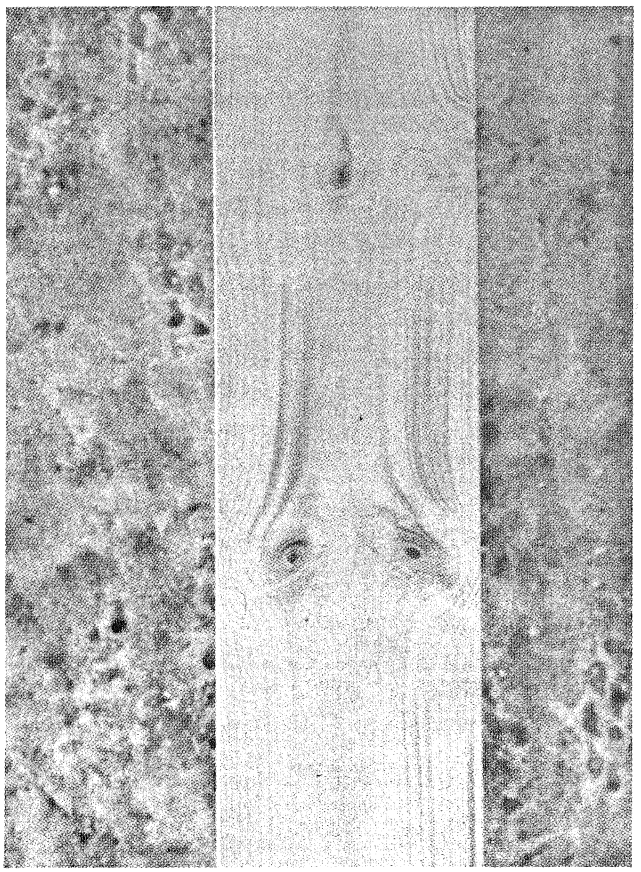

Utrevet ved under høvling gir dårlig kvalitet.
Torn-out wood during planing influences the quality negatively.

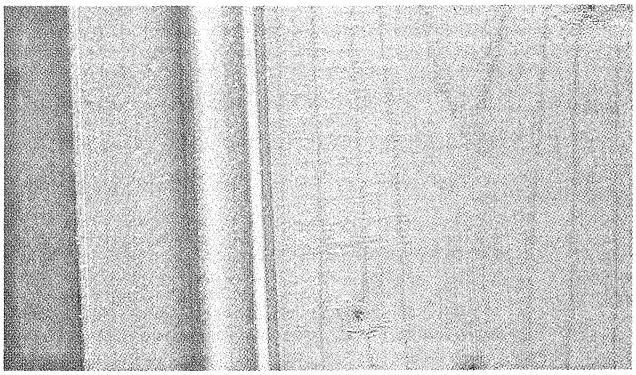

Løsvokst virke gir dårlig høvlingsflate.
Low density wood results in coarse planing.

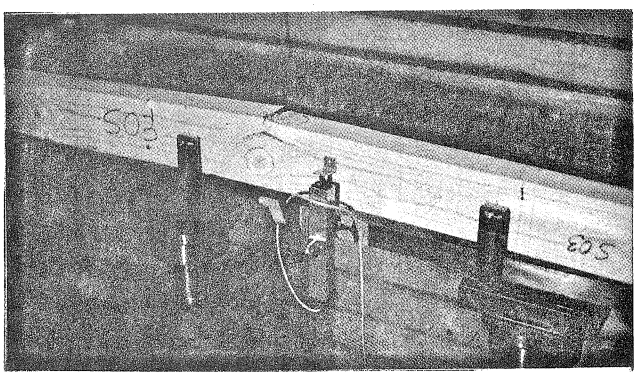

Knekking av granprøver. Ikke alle prøver var like sprø som denne.
Testing the bending strength of spruce wood.

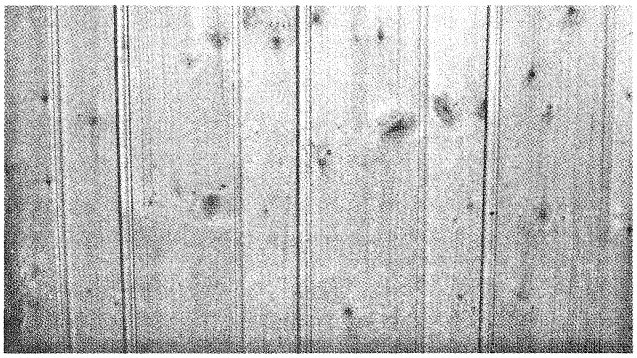

Panel av sitkavirket.
Interior panel boards from sitka grown in Western Norway.

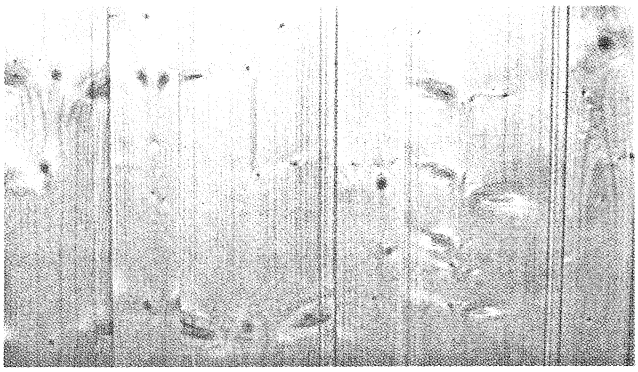

Panel av gran fra Vestlandet.
Interior panel boards from spruce grown in Western Norway.

## REFERENCES:


1 BAUGER, E. 1961.

Foreløpig produksjonstabell for sitkagran på Vestlandet.
Medd. Vestl. Forstl.Fors.st., nr. 35, Bergen

2 BOUTELJE, J. 1966

On the anatomical structure, moisture content, density, shrinkage, and resin content on the wood in and around knots in swedish pine and in swedish spruce.
Sv. Träf., Medd. 143 B

3 BRAZIER, J.D. et. al. 1976.

An evaluation of home-grown Sitka-Spruce.
Building Research Establisement,
Princess Risborough Lab, CP 20/76

4 BRYAN, J og F.G.O. PEARSON 1955

The Quality of sitka spruce grown in Great Britain.
Temp. Forestry Rev., 34 (2)

5 CURRY, W.T. & A.R. FEWELL 1981

Grade stress values for BS 5268 - second revision
Princes Risborough Lab.

6 DAHM, H.P. 1971

Sitkagran som råstoff for treforedlingsindustrien.
Papirindustriens Forskningsinstitutt, 9.

7 DINWOODIE, J.M. 1963

Variation in tracheid length in Picea sitchensis.
Spec. Rep. 16, For. Prod. Res., London

8 FEWELL, A.R. 1981

Timber strength classes for BS 5268.
Princes Risborough Lab.

9 FOSLIE, M. 1966

Tekniske egenskaper hos fremmede bartreslag vokst i Norge.
Manus. Norsk Treteknisk Institutt.

10 FOSLIE, M. 1971

Norsk granvirkets styrkeegenskaper.
3. styrkeegenskaper for små, feilfrie prøver.
Meddelse 42, Norsk Treteknisk Institutt

11 FOSLIE, M. 1983

Innplantede fremmede treslag som skurtømmer.
Norsk Skogindustri

12 FOSLIE, M. og MOEN, K., 1968

Norsk granvirkes styrkeegenskaper.
1. Bøyestyrke, elastisitetsmodul og strekkstyrke målt på 3" x 8" og 2" x 4".
Medd. 33, Norsk Treteknisk institutt.

13 FOSLIE, M. 1981

Normer for prøving av heltre, 2. oppl.
Arbeidrapport, Norsk Treteknisk institutt.

14 FOSLIE, M. og M. MÜLLER 1981

Sorteringsregler for skurlast slik de ble praktisert av Østlandets Skurlastmåling.
Norsk Treteknisk institutt

15 HANSBROUGH, J.R. & G.H. ENGLERTH 1944

The significanse of the discolorations in aircraft lumber. Sitka spruce
US Dep. Agric., For. Patl. Spec. Release 21, Madison

16 Norsk Standard 3080
3180
3470

17 SCHOBER, R. 1962

Die Sitka-Fichte. Schriftenreihe Univ Göttingen, bd. 24/25
Frankfurt a.M.

18 VORREITER, L. 1949

Holztechnologisches Handbuch

CIB-W18/19-6-1

INTERNATIONAL COUNCIL FOR BUILDING RESEARCH STUDIES AND DOCUMENTATION

WORKING COMMISSION W18 - TIMBER STRUCTURES

# EFFECT OF AGE AND/OR LOAD ON TIMBER STRENGTH

by

J Kuipers
Delft University of Technology
Netherlands

MEETING NINETEEN
FLORENCE
ITALY
SEPTEMBER 1986

CONTENTS


| | | Page |
|---|---|---|
| 1. | Introduction | 1 |
| 2. | Properties of old material | 2 |
| 2.1 | Material of old glulam beams | 2 |
| 2.2 | Material of an old truss | 5 |
| 2.3 | Bulkhead planks from Azobé | 6 |
| 2.4 | Conclusions | 6 |
| 3. | Properties of joints | 7 |
| 3.1 | Joints made of new and old material | 7 |
| 3.2 | Joints made of unused material in 1961 and 1983 | 8 |
| 3.3 | Joint strength after ca 2 years loading | 9 |
| 3.4 | Reinforced dowel joints after 2 years loading | 10 |
| 4. | Strength properties of trusses | 12 |
| 4.0 | Short-duration test of structures | 12 |
| 4.1 | Standardised roof trusses | 12 |
| 4.2 | Other trusses | 17 |
| 4.3 | Summary of truss tests | 20 |
| 5. | Conclusions | 21 |
| 6. | Possible effects on the safety approach for timber structures | 22 |
| Summary | | 24 |
| Literature | | 25 |

## 1. Introduction

During many years much attention has been paid at many places in the world on the effects of long-duration-loading on timber. Most of the investigations on the subject dealt with the measurement of time-to-failure of test specimens under constant loads of relatively high levels. Such investigations suggested that a long-duration-strength of about 55% of the short-duration-strength should be used to determine safe working stresses. Such working stresses for permanent loading on structures, built for an intended lifetime of 50 to 100 years turn out to be on a level of, very roughly, 25% (to 35% for joints) of the short-duration-strength values. The question arises if such low load levels do have a comparable damaging effect on the initial strength or that they, being so low, do not have any strength decreasing effects at all.

In [1] Vermeyden comes to the conclusion that not much research had been carried out to study the effect of long-duration of loading on the remaining strength of timber structural elements. The available information deals with the effect of repeated loading and of relative short duration of constant loads, sometimes to high load levels, but not with the effect of long-duration-loading to about the allowable levels. Nevertheless Vermeyden comes to the expectation that such preloading very probably will not have a significant strength reducing effect.

In the following some information, available at the Stevin Laboratory, has been put together as a first attempt to come to an answer to this question. The available date was not the result of a systematic approach because the investigations served other goals; nevertheless it is thought that they are of sufficient interest and a stimulant for further research.

## 2. Properties of old material.

There were two opportunities to gather information about the strength properties of old timber used in structures:

### 2.1 Material of old glulam beams.

In 1976 one of the first large glulam structures in our country was demolished. From this 52 years old "RAI - hall" two 12,5 m straight beams were given to our laboratory to investigate. There is no further information about the loading, etc., but it may be assumed that working bending stress of about 10 N/mm$^2$ was allowable at the time.

Table 1

| beam | $E_x$ | $E_y$ | $\frac{E_x}{E_y}$ |
|---|---|---|---|
| 1 | 7160 | 9820 | 0,73 |
| 2 | 7520 | 10400 | 0,72 |

In the first place it may be of interest to say that the EI-value of the beam was tested in both the strong and the weak direction (upright and flat). [2]

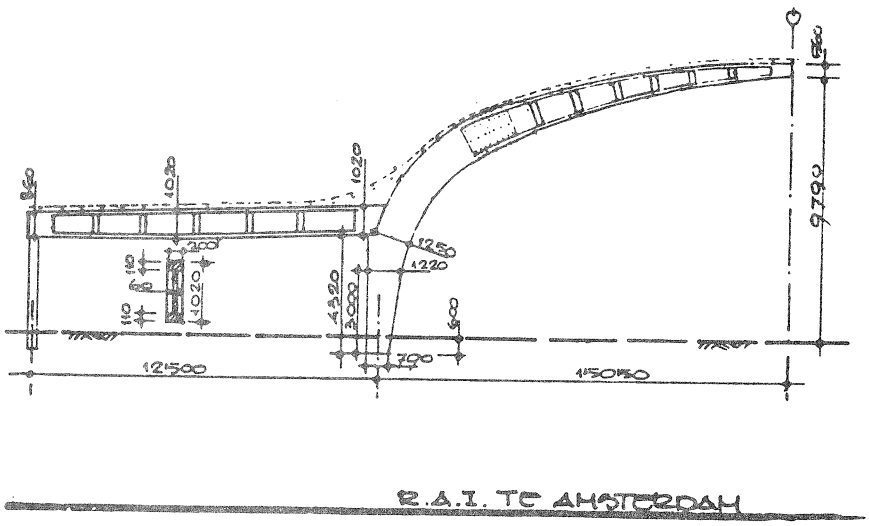


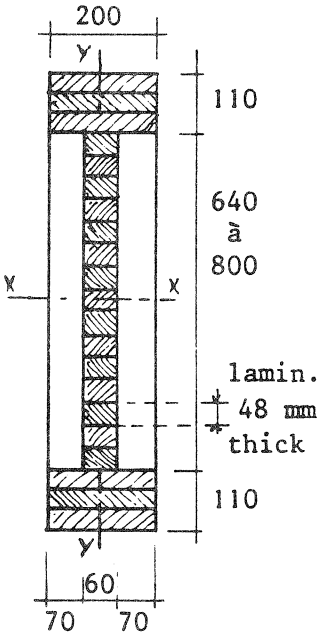


From this the E-values of table 1 were determined.
There is reason to suspect that not all the gluelines between the layers were intact, so that the "upright" E-values are not valid; the beam behaves more or less like a built-up beam.
Nevertheless, the E-values in flat position are not high either, for which we have no good explanation.

From one beam it was tried to make small specimens at several places, to find out if high-stressed material — as for instance at midspan in the flanges — would show different mechanical properties than low-stressed material.

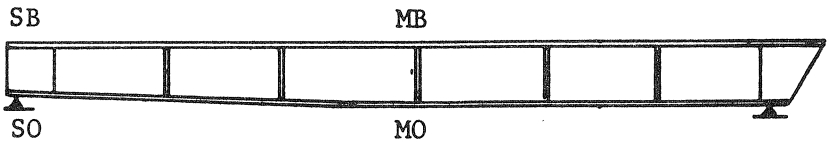


| place of spec. in beam | 20 x 20 x 60 mm³ | | 80 x 80 x 240 mm³ | |
|---|---|---|---|---|
| | $\rho$ [kg/m³] | $f_{c//}$ [N/mm²] | $\rho$ [kg/m³] | $f_{c//}$ [N/mm²] |
| MB | 503 | 47,5 | 450 | 42,7 |
| MO | 514 | 52,1 | 460 | 38,0 |
| SB | 433 | 38,7 | 420 | 36,5 |
| SO | 526 | 51,7 | 470 | 41,0 |

Table 2. Compressive strength values at different places of 52 years old glulam beam; small and larger specimens. Mean values of 6 specimens.

Table 2 shows compressive strength figures at 4 different places (mean values of 6 specimens 20 x 20 x 60 mm³).
One layer with $\rho$ = 433 kg/m³ gives a rather low mean value at a low-stressed point. It cannot be concluded that the high stressed region M gives lower values than the lower stressed region S.
Larger test specimens, of 90 x 80 x 240 mm³ showed lower strength values — which could be expected — but again not a significant influence of the stress level (table 2). The effect of density seems to be of some more interest, especially with the small test specimens (fig. 1).

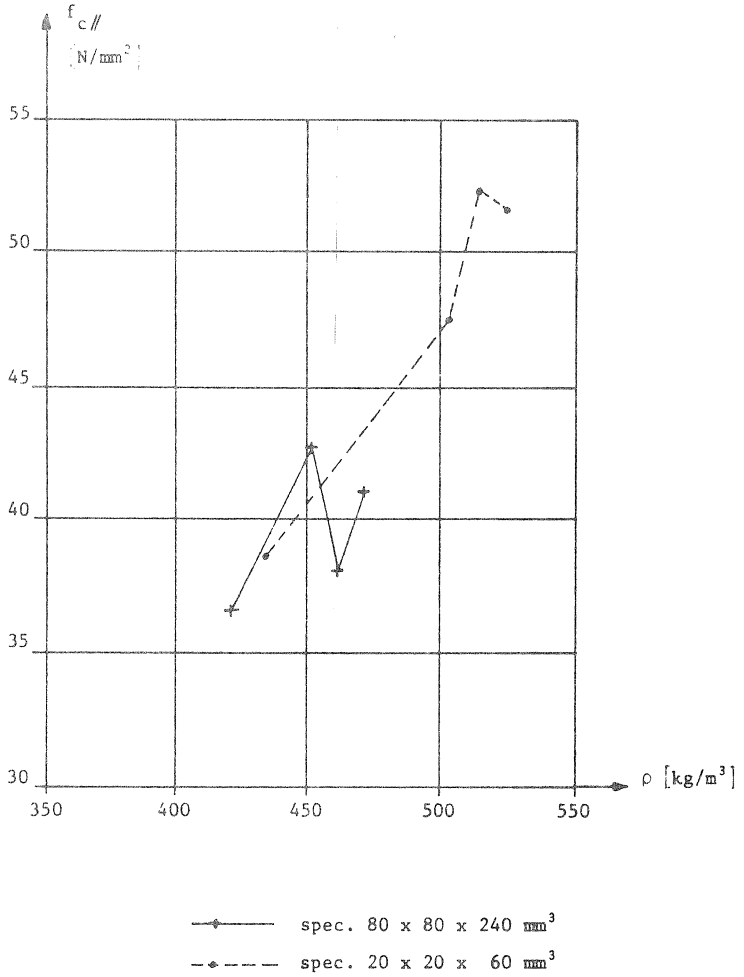


Fig. 1 Relationship between density ρ and compressive strength $f_{c//}$ for wood of RAI-building built in 1922.

Although tension tests were carried out, the results were much affected by knots and by the holes from nails, used for the glue pressure; nail pressing was the normal practice at that time for the manufacture of glulam.

Also tension tests perpendicular to the grain and to the gluelines were done, as well as shear tests. In these cases it appeared that the gluelines were not in a good condition after the 52 years of service; it is most probable that here casein-glue was used.

With respect to the main question, i.e. if stresses at the allowable level have an effect on the strength: it is repeated that there is no evidence in that direction.

The compressive strength of the old, used timber can also be compared with that of new, unused material.

The old material showed values of 39 to 53 $N/mm^2$ for small,
36 to 43 $N/mm^2$ for larger specimens.
New bought material gave 37 to 54 $N/mm^2$,
and of 37 to 45 $N/mm^2$ respectively.

Also in this respect there is no significant difference; at least the old values are not lower.

## 2.2 Material of an old truss.

Recently we received some material from a 100 to 120 years old steam-loc-shed. Here again tests were carried out on small (clear) specimens; the results are compiled in table 3, together with some values of comparable tests on new-bought timber [3]; [4].

| | $\rho$ $[kg/m^3]$ | MC | $f_{c//}$ $[N/mm^2]$ | $f_{\tau}$ $[N/mm^2]$ | embedm.str. $f_{st}$ $[N/mm^2]$ | $E_{c//}$ $[N/mm^2]$ |
|---|---|---|---|---|---|---|
| mean values of old wood (5 or 6 tests) | 424 | 10,4 | 48 | 7,9 | 48,4 | $17,5 \cdot 10^3$ |
| comparable values of "new" wood (many tests) | 450 | ca 11% | 45 | 7,5 | 34,5 | - |

Table 3 Some mechanical properties of 100-120 years old softwood of a steam-loc-shed.

Again there is no evidence that the old and used wood gives lower values than new, unused timber. Within the structure the used material was under compression.

## 2.3 Bulkhead planks from Azobé.

Some years ago an investigation [5] was carried out about mechanical properties of Azobé (Ekki) for bulkhead planks. In total 40 planks of 60 mm and 40 planks of 30 mm thickness were tested in bending; the material was imported from Kameroen and from Liberia. It was tested at a MC higher than 25%.
The results were compared with those of a number of used mooring poles (20 spec. of ca 120 x 55 mm), and with values of used planks. There were 11 planks, placed in 1959 and 10 planks placed in 1962; they were in use for 18 resp. 15 years.
Among other things it was concluded that the used material showed about 7% higher mean bending strength than the new material. This was ascribed to the better quality of the older material.

## 2.4 Conclusions.

It is not possible to base firm conclusions on the foregoing data, which was expected. Nevertheless there is not any indication that the mechanical properties of the old and used material were inferior to those of nowadays wood, due to relatively long service periods in structures. In this connection three notes are added:

- the 52 years old glulam beams showed low EI-values, probably due to partly delamination. This means that the real stresses in the structure must have been higher than the calculated ones;
- although the bulkhead planks were "only" for 18 and 15 years in use one should bear in mind that in that case the loads were acting permanently — but of course to an unknown level — ;
- the original properties of the wood are of course unknown; a quality difference of the bulkhead planks was mentioned, leading to slightly higher bending strength of the older material. This however is not the same as saying that the intrinsic wood properties (small clear) were different.

  So it is not proven that the relatively high strength values of the used wood could not be the result of originally much higher strength material with reduced properties due to long time use.

## 3. Properties of joints.

Around 1960 a research programme was started in the Stevin Laboratory about the long-duration strength of joints. A first part of that programme dealed with the "Time-To-Failure" problem, using high load levels (90 to 60%); this "TTF-programme" comes to an end now. (There are 9 test specimens left under load now.) [6]
A second part of the programme started in the spring of '84. This part tries to find out more systematically if permanent loads of about, or somewhat higher than the allowable level cause damage. This "Creep and Damage -" or "C&D-programme" will last about 10 years, in which every two years series of joints will be tested in a short term strength test [7], so after being loaded for 2, 4, ... to 10 years. The first results thereof will be described more into detail elsewhere but shortly mentioned in chapter 3.3.

### 3.1 Joints made of new and old material.

For the TTF-programme Standard Short Duration- (SSD-)strength tests were carried out in 1961. Because it was foreseen then that the C&D-programme mentioned before should be started at a later date, more material was bought than immediately necessary, and stored until 1983. From this 1961-material identical joints were made and tested in 1983. The results are summarised in the following table:

| fastener | SSD-strength of joints, made of 1961-material and tested in 1962 | 1983 | Combined values of '62 and '83 | |
|---|---|---|---|---|
| nail | 44,1 | 48,9 | 46,1 | mean (kN) |
| | 20 | 14 | 34 | n |
| | 0,04 | 0,07 | 0,07 | coeff of var |
| shear-plate | 31,5 | 35,7 | 32,6 | mean (kN) |
| | 19 | 6 | 25 | n |
| | 0,08 | 0,12 | 0,11 | coeff of var |
| splitring | 28,3 | 27,7 | 28,2 | mean (kN) |
| | 20 | 5 | 25 | n |
| | 0,15 | 0,13 | 0,15 | coeff of var |

Mean strength and coefficient of variation of joints, made of timber, bought in 1961; the joints were tested in 1962 resp. in 1983.

The 23 years of unloaded storage of the wood had apparently not a negative effect on the strength values, only the mean value of 5 splitring joints is slightly lower (2%) than the "fresh" ones in 1961; both the shear-plate and the nailed joints have about 12% higher values (13% resp. 11%).

## 3.2 Joints made of unused material in 1961 and 1983.

The question about a possible change in material properties — due to possible changes in growth, or processing conditions — arose already in 2.3. It was mentioned in 3.1 that for the C&D-programme joints were made from 1961-bought wood which were tested in 1962 and in 1983. For the same research new wood was bought in 1983, joints made and tested in the SSD-method. We now extend the table of page 7 into table 4.

| fastener | 1961-wood; joints tested in 1962 | 1961-wood; joints tested in 1983 | 1983-wood; joints tested 1983 | Combined results of all SSD-tests | |
|---|---|---|---|---|---|
| nail | 44,1 | 48,9 | 44,5 | 45,7 | mean (kN) |
| | 20 | 14 | 10 | 44 | n |
| | 0,04 | 0,07 | 0,09 | 0,06 | coeff of var |
| shear-plate | 31,5 | 35,7 | 35,4 | 33,4 | mean (kN) |
| | 19 | 6 | 10 | 35 | n |
| | 0,08 | 0,12 | 0,12 | 0,10 | coeff of var |
| splitring | 28,3 | 27,7 | 29,8 | 28,6 | mean (kN) |
| | 20 | 5 | 10 | 35 | n |
| | 0,15 | 0,13 | 0,14 | 0,15 | coeff of var |

Table 4. Mean SSD-strength and coefficient of variation of joints, made and tested at different times. Joints not preloaded.

From this table it cannot be concluded that the joints made of 1983-bought wood have lower SSD-strength values than the joints made of 1961-bought wood.

## 3.3 Joint strength after ca 2 years loading.

As it was mentioned in the introduction to chapter 3 a first series of results from the C&D-programme of our long-duration tests on joints was carried out recently. The results will be described more extensively elsewhere; here only the SSD-strength values will be mentioned. The joints, loaded to about the 50%-level for about 2 years ( $\pm$ ½ month), were unloaded and, after a recovery period of 2 to 6 weeks, tested in a standard short-duration test. The results are shown in table 5, together with the original mean strength values from table 3. All test specimens included were made from 1961-bought timber.

| fastener | original SSD-strength [1] mean and coeff.of var. | SSD-strength after 2 years loading mean and c. of v. | perman. load [1] |
|---|---|---|---|
| nail | 44,1<br>0,04 | 49,3 [2]<br>0,07 | 22 kN |
| shear-plate | 31,5<br>0,08 | 34,8<br>0,07 | 15,8 kN |
| splitring | 28,3<br>0,15 | 27,3<br>0,13 | 14,1 kN |

1) These values were determined on the basis of the 1962-results only; cf table 3.

2) An error may have taken place in the standard test, so that rate of loading was kept constant until failure with 5 out of 10 tests. If only the well tested specimens were taken we find a mean strength of 46,3 kN with a coeff. of var. of 0,03 (the other 5 specimens gave a mean of 52,3 kN with coeff. of var. 0,03).

Table 5. SSD-strength of joints after 2 years loading to ca 50% load level, compared with original strength.

There is no evidence that the permanent load to about 50% of the standard short-duration strength had any negative influence, or in other words, such a load does not produce such damage that the remaining strength decreases noticeably.

## 3.4 Reinforced dowel joints after 2 years loading.

The specimens of 3.3 were loaded in strings of 5 which were attached to each other by means of reinforced dowel joints. Such joints were made by gluing steel plates of 2,5 mm thickness on the surfaces of the members, which then were connected by steel dowels Ø 8 mm. The original strength values of these joints as well as the strength after 2 years loading at load levels of 30 to 22% for the different joints are given in table 6.

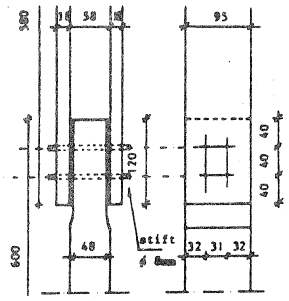


| string of joints with | original strength | | after 2 years loading | | | |
|---|---|---|---|---|---|---|
| | max.load [kN] | max.τ [N/mm²] [1)] | max.load [kN] | max.τ [N/mm²] [1)] | load level | |
| nails | 74,4 | 3,3 | 61,6 | 2,7 | 0,30 | mean |
| | 8 | | 7 | | | n |
| | 0,06 | | 0,27 | | | c. of va |
| shear-plates | 68 | 3,0 | 60,4 | 2,6 | 0,23 | mean |
| | 7 | | 8 | | | n |
| | 0,06 | | 0,26 | | | c. of va |
| splitrings | 65,2 | 2,9 | 78,9 | 3,5 | 0,22 | mean |
| | 8 | | 8 | | | n |
| | 0,06 | | 0,07 | | | c. of va |

1) mean shear-stress in glue line of steel to timber.

Table 6. SSD-strength data of reinforced doweled joints.

Here seems to be an indication that some loaddecreasing effect might have occurred at the joints in the strings with nails and shear-plates, not in the strings with split ring joints, which show the opposite development.

The high coefficient of variation in the first two cases, in combination with a few other observations of low performance make it probable that the glued connection between steel and wood in this case has a not too good quality, leading to low shear strength of the glue line between steel and timber. A third comment is that the doweled joints in the strings were loaded in tension, but that they were tested in compression in the standard test. Besides the change of load direction some unfavourable effect may be due to imperfect plan-parallel compression surfaces, especially with the very stiff joints.
The conclusion is that we put here some question-marks about the interpretation of these test results.

## 4. Strength properties of trusses.

On several occasions timber trusses were made and tested, sometimes after a period of preloading, sometimes not.
Different types of trusses were tested; of the 20 specimens which will be shortly described 10 belong to a series of standardised nailed roof trusses; another 2 resp. 3 were designed together to serve as a load carrying system in the lab; 5 other trusses were designed and made for other occasions.

### 4.0 Short-duration test of structures.

For all trusses a standardised loading scheme was used (see fig. 2). At that time it was necessary to wait 5 min. after attaining a certain loadstep before reading the measuring devices in order to have passed the main part of the direct creep. This waiting time was not necessary during the last phase III of the test, where the number of measures was reduced.

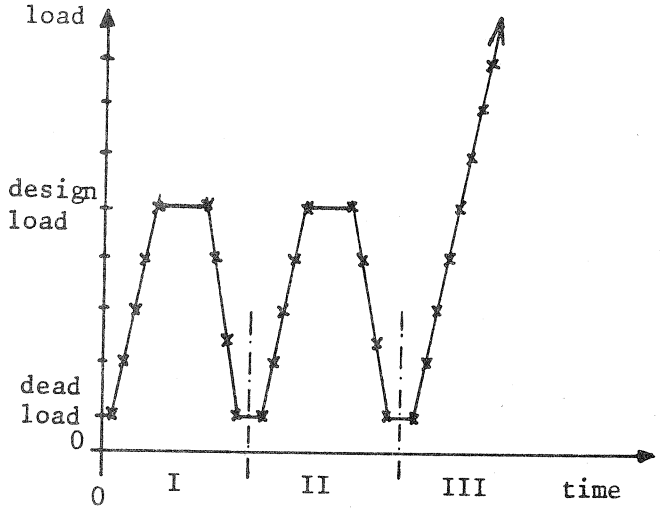


Fig. 2 Loading scheme for structures.

For the long-duration tests first the parts I and II were done, then the long-duration test and after unloading the whole test procedure I, II and III.

### 4.1 Standardised roof trusses.

Around 1960 a series of nailed roof trusses was designed for spans between 6 and 15 m, with three roof slopes and for 4 design loads. In doing so a series of 10 x 3 x 4 = 120 designs became available, including detailed drawings. It was decided to test a number of such trusses [8] according to the programme of table 6.

| slope | Configuration (see fig. 3) I span 6m | 8 m | II 10 m | III 12 m | IV 15 m |
|---|---|---|---|---|---|
| $14^0$ | | | | x | |
| $22^0$ | x x | x | x x x x [1] | | x [4] |
| $30^0$ | | | | x [2]<br>x [3] | |

All trusses designed for a load of 3,75 kN/m$^1$, except

1) 2 trusses loaded in long-duration test

2) designed for 2,8 kN/m$^1$

3) designed for 6,85 kN/m$^1$

4) planned but not tested.

Table 6. Test programme for standardised nailed roof trusses.

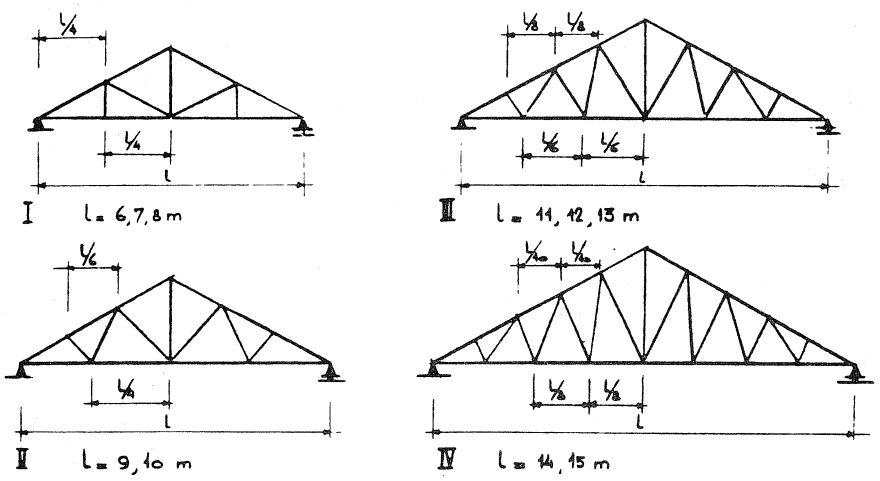


Fig. 3 Configuration of standardised nailed trusses.

All trusses were designed by two structural engineers and the designs discussed within a group of other specialists, so it may be supposed that a certain number of balanced designs was available, although several differences in detailing were accepted.
In total a series of 10 trusses were tested, from which 2 with 10 m span after a long-duration load.

Table 7.

## Results of tests to failure on trusses

Short duration tests and
long dur. tests followed by a short dur. test.

| nº | type of truss | l [m] | long dur.test load | long dur.test time | short dur.test fail.at w×$q_{allow.}$ |
|---|---|---|---|---|---|
| 1 | 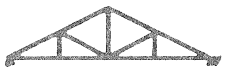 nailed | 6 | —— | | 2.1 |
| 2 | | 6 | —— | | 2.1 |
| 3 | | 8 | —— | | 2.1 |
| 4 | 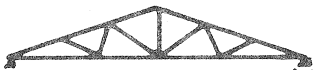 nailed | 10 | —— | | 2.2 |
| 5 | | 10 | —— | | 2.7 |
| 6 | | 10 | q | 2½ yrs | |
| | | | 1.5$q_{all}$ | 2 months | |
| | | | 2 $q_{all}$ | 3 „ | |
| | | | 2.2$q_{all}$ | fail aft. 2 mo. | —— —— |
| 7 | | 10 | idem not failed | | 2.9 (à 3.5) |
| 8 | 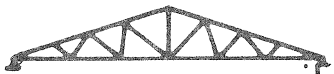 nailed | 12 | —— | | 2.6 |
| 9 | | 12 | —— | | 2.8 |
| 10 | | 12 | —— | | 3 |
| 11 | trussed rafter nailed | 7.65 | | | 2 |
| 12 |  | 7.65 | $q_{zul}$ | 12 days | |
| 13 | | 7.65 | | | 2.8 |
| 14 |  nailed | 16 | $q_{zul}$ | 1¼ year | 2.8 |
| 15 |  Bulldog | 6.70 | q à ½q | 2½ yr | 3.1 |
| 16 | idem splitring | 6.70 | idem | idem | 4.1 |
| 17 |  splitring | 2.40 | idem | idem | 3.4 |
| 18 | | 2.40 | | | 3.8 |
| 19 |  splitring | 3 | idem | idem | > 3.4 |
| 20 |  splitring | 18 | —— | —— | 2.5 |

It must be mentioned that the trusses were loaded by purlins which not always coincided with the panel points of the truss, so bending moments occurred (the trusses were designed therefore).
Although balanced truss-designs may be expected, it is most likely that in the short-duration tests the joints should fail: due to smaller scatter (standard deviation) in the joints (we decided on the basis of our tests to a coefficient of variation of 0,12 for joints instead of 0,20 to 0,25 for wood properties), the ratio between mean failure load and allowable load on joints is about 2,8 instead of about 4 which is usual for timber stresses. Furthermore in several cases the timber dimensions had to be greater than necessary because of the space needed for the joints. In this way it is necessary not to compare the failure load on a truss with the allowable or design load but to determine a safety value for the first-failed part or joint of the structure. In doing so it was also tried to take into account the redistribution of forces in the truss at large deformations, whereas the accompanying moments were not considered.
An overview of the test results on these 10 trusses has been given in table 7, truss numbers 1 to 10 , where two long-duration tests on 10 m trusses are included.
The following remarks are made:

- 6 m trusses

  . truss 1: failure at heel joint = joint between upper and lower chord and at the same time in a lap joint of the lower chord. In both cases the ratio

$$\frac{\text{estimated max. force at the joint under test}}{\text{allowable load on the real truss joint}} = \frac{F_{max}}{F_{all}} \simeq 2,1.$$

  . truss 2: tension failure within a part of the lower chord, close to a knot of acceptable size for the grade. In this case the ratio

$$\frac{F_{max}}{F_{all}} \simeq 2,1.$$

. For the whole truss the ratio $\frac{F_{max}}{F_{design}}$ = 3 for truss 1,

and = 2,6 for truss 2

- 8 m truss

. truss 3: failure at heel joint; $\frac{F_{max}}{F_{all}} \simeq 2,1$;

for the truss $\frac{F_{max}}{F_{design}} \simeq 3$

- 10 m trusses;

four identical trusses were tested; two of them in a standard short duration test, the other two at long duration of loading.

. truss 4: failure in lap joint of lower chord, with $\frac{F_{max}}{F_{all}} \simeq 2,2$

for the truss $\frac{F_{max}}{F_{design}} \simeq 2,8$

. truss 5: failure at same place, with $\frac{F_{max}}{F_{all}} \simeq 2,7$

for the truss $\frac{F_{max}}{F_{design}} \simeq 3,7$.

. trusses 6 and 7 were subjected together to a long-duration load:

$2\frac{1}{2}$ years at design load $q_{des}$

after unloading:

2 months at 1,5 $q_{des}$

3 months at 2 $q_{des}$

2 months at 2,2 $q_{des}$ after which truss 6 failed.

truss 6: failure at lap joint in lower chord, for which joint the ratio $\frac{F_{fail;\ long\ dur}}{F_{all}} \simeq 2,6$.

truss 7: did <u>not</u> fail after the long-duration loading, was tested afterwards in a short-duration test. It then failed, again at the lap joint in the lower chord, at a ratio $\frac{F_{max}}{F_{all}} \simeq 3,5$. The ratio (for the truss) $\frac{F_{max}}{F_{design}} \simeq 2,9$.

- 12 m trusses

Three trusses were tested; they had different slopes and were designed for different loads.

. truss 8: failure at heel joint;

$$\frac{F_{max}}{F_{all}} = 2,6; \text{ for the truss } \frac{F_{max}}{F_{design}} = 3,0$$

. truss 9: failure at lap joint in lower chord;

$$\frac{F_{max}}{F_{all}} = 2,5; \text{ for the truss } \frac{F_{max}}{F_{design}} = 2,8.$$

. truss 10: failure at lap joint in lower chord;

$$\frac{F_{max}}{F_{all}} = 2,2 \text{ (estimated); for the truss } \frac{F_{max}}{F_{design}} = 2,6$$

4.2 Other trusses. [9]

4.2.1 Trussed rafters with nailed gusset plates; span 7,64 m (trusses 11, 12 and 13).

The trusses failed at $\frac{F_{max}}{F_{design}} = 2,8$; 2,5 and 2,5.

but the reason of failure is not exactly known, probably more bending and/or stability reasons than joints.

4.2.2 Nailed truss; span 16 m (truss 14).

A specially designed truss, with chords and compressed diagonals made of solid timber with the same thickness, and double tension diagonals nailed onto the chords.

The loading procedure is rather complicated and has been given in fig. 4, where it can be seen that the total testing time of the truss was almost 3 years, during which:

- the permanent load acted during the first ¾ year,
- followed by unloading and several short loadings to snow and design load,
- a 16-months' period of loading to design load,
- a period of several cycles between permanent and design load,
- two times loading until ca 2 x design load, where instability of the upper chord and, later, also from the lower chord occurred,
- test to failure, which occurred at 2,8 x design load.

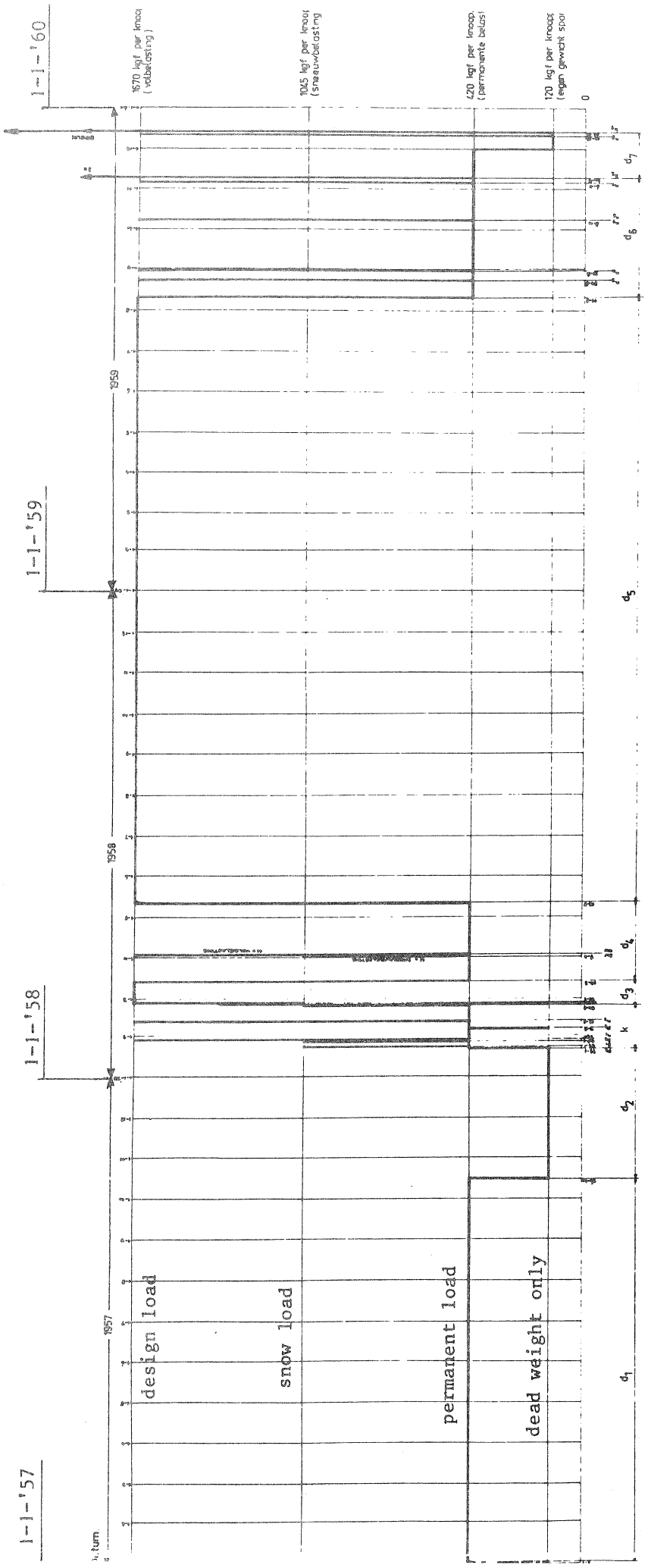


Fig. 4 Loading history of 16 m nailed truss (truss No. 14 of table 7).

Failure took place in one part of a double tension diagonal at a knot after which at the same load the nailed joint of the other part failed — of course much more overloaded now — . On several other places the joints showed large deformations, so that their max. load at failure must have been very close.

4.2.3 Shear-plate truss; span 6,70 m (truss 15).

This truss was built together with a splitring truss (see 4.2.4) of about the same dimensions. They were loaded together by a water tank used for another project, from which at intervals water was tapped. The load varied between design load and about 0,4 x design load, with a mean of about 0,5 x design load, during a period of about $2\frac{1}{2}$ years.

After unloading a short-duration strength test was carried out. The truss failed at 3,1 x design load at a joint (the allowable load of that joint was just reached at the so defined design load on the truss), so

$$\frac{F_{max}}{F_{all}} = \frac{F_{max}}{F_{design}} = 3,1.$$

4.2.4 Splitring truss; span 6,70 m (truss 16).

The truss, comparable with truss 15 and loaded in the same manner, showed at the short-duration strength test a joint failure at 4,1 times design load, so

$$\frac{F_{max}}{F_{all}} = 4,1.$$

4.2.5 Splitring trusses of smaller spans (2 x 2,40 m and 3 m, resp. No.'s 17, 18 and 19).

These small trusses were built to serve as supports for the two trusses 6 and 7 described in 4.1.

In all three trusses one joint was loaded to about full allowable load at the design load of the truss. The real load on the support trusses varied in the same way as the long-duration load on trusses 6 and 7.

After the long-duration test the three trusses were tested in a short-duration test to failure.

Truss 17 failed with a tension failure in the decreased section at a joint at 3,4 x allowable load.

Truss 18 (identical to 17) failed at the same place but in the joint, at 3,8 x allowable load.

Truss 19 did not fail at a load of 3,4 x allowable load of the most unfavourable joint and could not be tested to failure.

For these trusses the values $\frac{F_{max}}{F_{all}}$ = 3,4; 3,8 and 3.4.

4.2.6 Splitring truss; span 18 m (truss 20).

This truss, built for an exhibition, was transported after loosening of the joints and rebuilt at the lab.

In the short-duration test an under-dimensioned joint (not under-designed) failed early. Lateron a joint in the lower chord failed at 2,5 x design load:

$\frac{F_{max}}{F_{all}}$ = 2,5.

4.3 Summary of truss tests.

The results of tests on 20 trusses were collected in table 7.

The "safety factor" for all trusses tested in a short-duration test varies between 2,1 and 3. The trusses that experienced some way of pre-loading during periods up to about 3 years, showed after that "safety factors" between 2 and 4,1.

From these values it cannot be shown that the preloadings have damaged the trusses significantly.

## 5. Conclusions.

The greater part of the foregoing was the result of tests which were done not specifically to produce information on the possible damaging effect of preloading on the strength of timber and timber structural parts. Nevertheless with these values available it cannot be shown that preloads of relatively high load levels do have a negative effect on the standard short-duration strength. The results of the test on joints in 3.4, which are a first result of a test series to study this effect more in depth give the same impression, although in this case a closer examination of the results must be carried out.

Although this was not mentioned within this report, the deformations of all tested joints and trusses were measured. These results were outside the scope of the question dealt with here, but they are of course of interest and we hope to be able to come back to that in a later stage.

## 6. Possible effects on the safety approach for timber structures.

If it might be true that loads on timber structures, up to an adopted level of the long-duration-strength, do not have a measurable negative influence on that structures' strength, we shall have to reconsider the safety approach.

For the determination of the design values for stresses, and the like, we now make use of time- (modification-)factors which are based on a TTF-line as in fig. $5^a$. This utilisation of the TTF-line can only be correct if this is based on the supposition that wood loses a part of its strength properties and this strength loss takes place in a (linear) relationship with the (log. of) time, independently of the load level. We seem to accept thus that any load or stress, of a certain duration T results in a damage of $(1 - k_{mod.}) \cdot R_o$. So we mistake the time-to-failure graph with the proper damage lines.
Instead we should complete fig. $5^a$ to fig. $5^b$ and make a clear difference between the damage lines, connected with the load levels p, and the one time-to-failure line. This means that the available strength for a structural part with an aspired lifetime of 50 years,could be constantly loaded to a maximum of 55% of a safe short-duration-strength. The "available strength" in that case has the shape of fig. $5^c$.
Most structures will only for short periods be loaded to the most unfavourable stresses. The real situation will then be something like in fig. $5^d$.

Acceptation of this idea would in its ultimate consequence lead to the total neglect of the load-duration effect, and so to an increase of the design values with a factor $\frac{16}{9} = 1{,}78$.

This ultimate consequence is not yet our proposal, but nevertheless we think that the attention given to the problem of the time-dependent behaviour of wood and the safety of timber structures needs to be continued and even extended.
We must have the data about the long-behaviour, and a better phylosophy about the safety aspects of timber structures. This, of course, should be combined with much better knowledge about the deformations, including creep and moisture effects, as well as about the acquired performance of structures to avoid failures.

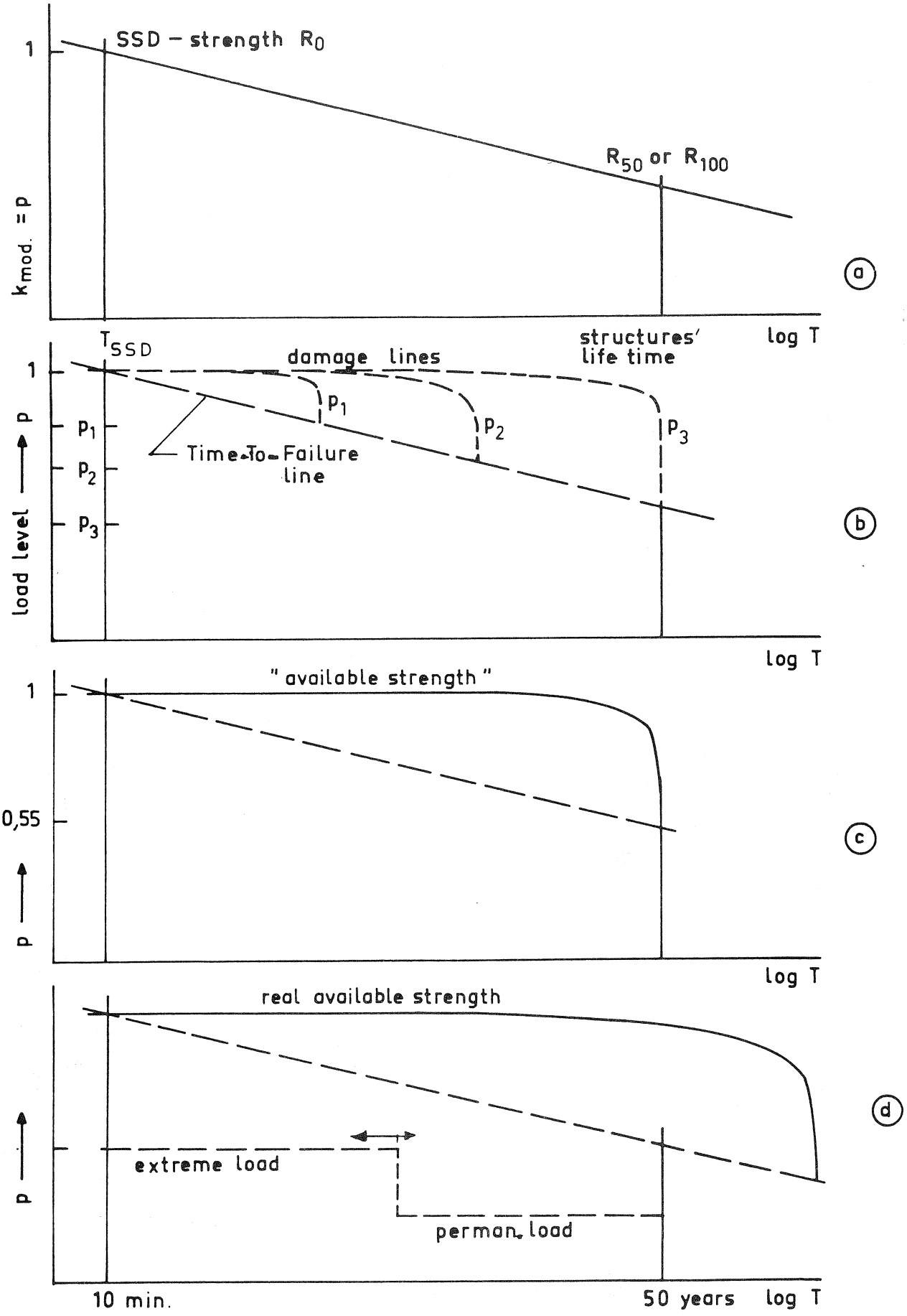


Fig. 5 Use of damage lines in stead of Time-To-Failure line for safety approach.

Summary.

This paper describes a number of tests carried out in the Stevin Laboratories Delft on timber, on joints and on trusses. Much of the material and of the structural elements was loaded for longer or shorter periods to different load levels, sometimes within normal structures (RAI-building, Amsterdam; steamloc shed, Arnhem), or in the laboratory. Although the subsequent investigations served preliminary other purposes, they were brought together here to demonstrate that from all these tests there is no real evidence that preloading of timber or timber structures to a limited load level has produced any damage. This result supports the idea that the ongoing research in this respect set up in the Stevin Laboratories should be continued, and may be should be extended. Such research possibly could prove a thesis that the safety of timber structures should be determined to be the highest load level which produces "no" damage and where the remaining strength is, after statistical studies, enough to guarantee the demanded low probability of failure during (not at the end! of) the lifetime of the structure.

Literature.

[1] Vermeyden, ir. P.
Literature survey about the time-effect of different factors on wood and on timber joints.
Report 4-59-7; HD-3 (in Dutch).

[2] Pwa, ir. K.L.
Investigation of material properties from glued laminated beams of the old RAI-hall in Amsterdam.
Report 1-80-2, Stevin Laboratories Delft (in Dutch).

[3] Bueren, ing. R. van
Investigation of material properties from a compression member of a truss of a 100 to 120 years old steam-loc-shed.
Report 4-85-4; HE-11, Stevin Laboratories Delft (in Dutch).

[4] Kuipers, ir. J. and Vermeyden, ir. P.
The safety of timber joints, HERON 1985 No. 1 (in Dutch).

[5] . Buiten, ir. H. and Rijsdijk, ir. J.F.
Mechanical properties of used and unused Azobé (Ekki).
Report H-77-93, Houtinstituut T.N.O. Delft (in Dutch).

. Anon.
Timber bulkheads and mooringpoles.
Brochure 78-1, Centrum Hout Naarden (in Dutch).

[6] . Vermeyden, ir. P.
Proposal research programme time-dependent properties of timber joints.
Report 4-60-3; HD-6, Stevin Laboratories Delft (in Dutch).

. Within this research a series of research reports (in Dutch) are available (HD-1 to -19), among which

Foschi, dr. R.D.
Load duration testing and damage accumulation modelling in timber joints.
Report 4-79-7; HD-17, Stevin Laboratories Delft (in English).

. Kuipers, Prof. ir. J.
Langzeitversuche mit Holzverbindungen, Bauen mit Holz 5/83.

[7] Kurstjens, ing. P.B.J.
Creep and damage effects of long duration of load on joints.
Report 4-84-8; HD-21, Stevin Laboratories (in Dutch).

[8] Vermeyden, ir. P. and Kuipers, ir. J.
Tests on standardised nailed roof trusses.
A series of 8 reports, series HSS-1 up to and including HSS-8, 1960-1966,
Stevin Laboratories Delft (in Dutch).

[9] Kuipers, ir. J; Vermeyden, ir. P.; a.o.
Tests on different roof trusses.
A series of 9 reports, series HS-1 up to and including HS-9; 1957-1972,
Stevin Laboratories Delft (in Dutch).

CIB-W18/19-6-2

INTERNATIONAL COUNCIL FOR BUILDING RESEARCH STUDIES AND DOCUMENTATION

WORKING COMMISSION W18 - TIMBER STRUCTURES

# CONFIDENCE IN ESTIMATES OF CHARACTERISTIC VALUES

by

R H Leicester
CSIRO Division of Building Research
Australia

MEETING NINETEEN
FLORENCE
ITALY
SEPTEMBER 1986

# CONFIDENCE IN ESTIMATES OF CHARACTERISTIC VALUES

by

R.H. Leicester
Division of Building Research
CSIRO Melbourne, Australia

SUMMARY

This paper describes three algorithms that may be used to estimate five percentile values with 75 percent confidence. A method for assessing the effectiveness of estimating algorithms is described. The suitability of using a 75 percent confidence level is discussed.

## INTRODUCTION

The purpose of this paper is to discuss the use of algorithms for estimating characteristic values of strength from sample data. Specifically attention will be focussed on the use of three algorithms for estimating the five percentile value with 75 per cent confidence. Two particular aspects will be considered. The first is a method for assessing the effectiveness of any particular algorithm; the second is the suitability of 75 percent as the value of the confidence level.

A significant feature of structural strength is that the type of statistical distribution that defines the parent population cannot be determined from a limited sample; this provides a fundamental difficulty in defining the confidence limits of an estimating algorithm. However for practical purposes this difficulty can be mitigated by placing bounds on the types of distribution that are acceptable as being reasonable to expect.

In this study the bounds on the parent population will be stated in terms of coefficient of variation and skewness as shown in Figure 1. The possible sets of these parameters are taken to lie between those of the Weibull and log normal distribution. Furthermore it will be assumed that the coefficient of variation $V_{par}$ is not greater than 0.5, and that the minimum sample size is 30.

In the following the basic notation used is as follows:

$R_{par}$ = strength of parent population
$R_{data}$ = data value in a sample
$R_{est}$ = an estimate of characteristic strength

A more extensive definition of the notation used is given in Appendix V.

## ESTIMATING ALGORITHMS

### General

The statistical parameters used in the algorithms are computed from $R_{data,i}$, the ranked values of a sample. The value of $R_{data,i}$ is taken to be that of the $p_i$ -th fractile, where

$$p_i = (i-0.5)/N \qquad (1)$$

where N denotes the sample size. Values of other fractiles are obtained by direct interpolation between the data points.

The mean value of the sample is:

$$R_{data,\ mean} = \frac{1}{N} \sum R_{data,i} \qquad (2)$$

whem the symbol $\sum$ denotes the summation for i=1,2,....N.

The standard deviation $\sigma_{data}$ is taken to be given by:

$$\sigma^2_{data} = \frac{1}{n} \sum (R_{data,i} - R_{data,mean})^2 \qquad (3)$$

The coefficient of variation $V_{data}$ is:

$$V_{data} = \sigma_{data}/R_{data,mean} \qquad (4)$$

and coefficient of skewness $\eta_{data}$ is

$$\eta_{data} = (1/N\sigma^3_{data}) \sum (R_{data,i} - R_{data,mean})^3 \qquad (5)$$

Algorithm No.1

The basis for this algorithm is described in Appendix 1. In developing this algorithm, a primary aim was to achieve extreme simplicity in application.

For each given sample, an estimate of the characteristic strength, denoted by $R_{est}$, is given by

$$R_{est} = R_{data,0.05} (1 - 2.7\ V_{data}/\sqrt{N}) \qquad (6)$$

where $R_{data,0.05}$ and $V_{data}$ are the five percentile value and coefficient of variation of the data in the sample.

Algorithm No.2

This is a development of Algorithm No.1, in which additional information of skewness is incorporated. The basis of this algorithm is discussed in Appendix II. The estimate of characteristic strength is given by

$$R_{est} = R_o + (R_{data,0.05} - R_o)(1 - 2.7\ V_o/\sqrt{N}) \qquad (7)$$

where

$$V_o = (\eta_{data} + 0.95)/3.0 \quad (8)$$

$$R_o = R_{data,mean} [1 - (V_{data}/V_o)] \quad (9)$$

Algorithm No.3

This algorithm is an empirical adaption of the type of equation developed by Liebermann (1958) for normal distributions. The estimate of characteristic strength is given by

$$R_{est} = \exp \{y_{mean} - A_n \sigma_y\} \quad (10)$$

where $y_{mean}$ and $\sigma_y$ are the mean and standard derivation of the parameter $y_i$ defined by

$$y_i = \ln \{R_{data,i}\} \quad (11)$$

and the constant $A_n$ is given in Table 1. This constant was chosen to give a correct estimate for a Weibull distribution.

TABLE 1
CONSTANT FOR ALGORITHM NO.3

| Sample Size N | Constant $A_n$ |
|---|---|
| 10 | 2.84 |
| 30 | 2.33 |
| 100 | 2.09 |
| 300 | 1.99 |
| 1000 | 1.90 |

ASSESSMENT OF ALGORITHMS

Criteria for Assessment

Figure 2 is a schematic illustration of the statistical distributions of the parent population $R_{par}$ and the estimator $R_{est}$. It shows $R_{par,0.05}$,

the target five percentile value of the parent population and $R_{est,mean}$ and $R_{est,0.75}$, the mean and 75-percentile values of the estimator.

If the distribution of the parent population were known exactly, then it would be possible to choose the estimators so as to meet the ideal condition

$$R_{est,0.75} = R_{par,0.05}. \qquad (12)$$

However, in general this is not possible.

Two measures are proposed to define the effectiveness of an estimator. The first is an accuracy factor, AF defined by

$$AF = R_{est,0.75}/R_{par,0.05} \qquad (13)$$

Obviously it is desirable that the accuracy factor does not exceed 1.0 regardless of the type of distribution used, as this indicates that the estimating algorithm does not produce the desired confidence in the estimate of the five percentile value. Hence for the range of acceptable distributions, the accuracy factor must satisfy the criterion.

$$AF \leq 1.0 \qquad (14)$$

Provided this criterion is satisfied, the value of a particular estimator algorithm can be measured in terms of an efficiency factor EF defined by

$$EF = R_{est,mean}/R_{par,0.05} \qquad (15)$$

It is readily apparent that the efficiency factor is a measure of the average penalty incurred due to the use of limited sample sizes.

## Numerical Studies

Numerical studies of the proposed algorithms were undertaken using Monte Carlo simulation techniques. The random number generator used was that proposed by Wichmann and Hill (1982), and the generation of normal variates (required for simulating lognormal distributions) was carried out by the method described by Marsaglia and Bray (1964). The minimum number of samples used for each investigation was 500.

The three algorithms were applied to three types of parent distributions. These were a two parameter Weibull distribution, a three parameter Weibull distribution and a lognormal distribution (Benjamin

and Cornell, 1970); these three distributions are indicated by W2, W3 and LN respectively in the plotted results. The three parameter Weibull distribution used was one in which the skewness had been chosen to match that of a lognormal distribution having a similar coefficient of variation.

Numerical Results

It is readily apparent from the definitions of the accuracy and efficiency factors that both of these must tend to the ideal value of 1.0 as $V_{par}$, the coefficient of variation of the parent population tends to zero; this is illustrated for the case of algorithm No. 1 in Figures 3 and 4.

The effect of sample size is illustrated in Figures 5-10. As would be expected, in the cases of algorithms Nos. 1 and 2, both the accuracy and efficiency factors tend to the ideal value of 1.0 as N becomes large.

In general terms it may be concluded that the efficiencies of the three algorithms are roughly comparable, with that of algorithm No. 2 being the best. In the practical application of algorithm No. 2, a small modification factor would be needed to correct for the slight overshoot above 1.0 in the accuracy factor.

## OTHER CHARACTERISTIC VALUES

The estimating algorithms described may be modified for application to characteristic values other than the five percentile one discussed above. In particular the estimator equation (6) for algorithm No. 1 may be generalised to provide an estimate of the p-fractile from

$$R_{est} = R_{data,p} \, (1 - 0.85 \, V_{data}/\sqrt{2pn}) \qquad (15)$$

where $R_{data,p}$ is the value of the p fractile of the data.

The estimator equation (7) for algorithm No.2 may be similarly modified.

## EFFECT OF CONFIDENCE LEVEL

It would be useful to have a rational basis for the choice of confidence level in estimating characteristic values. One method of doing this is to make use of reliability concepts. A simple application of first order reliability theory for this purpose is described in Appendix III.

Figures 11 and 12 show some results of the application of this theory to

the use of the estimator of algorithm No.1. In this application the target safety index has been taken to be $\beta_{nom} = 3.5$. The figures show the actual safety obtained when the characteristic value is estimated from a sample with 50%, and 75% confidence levels. Within the practical range, the improved safety level due to the use of a 75 rather than a 50% confidence level would appear to be worth attaining.

## CONCLUSIONS

A method has been proposed for comparing the effectiveness of estimating algorithms, and has been applied to three such algorithms. The use of the very simple estimator of algorithm No. 1 was found to give reasonable results and hence in practice the use of more complex algorithms may not be warranted.

The significance of the choice of confidence level in sampling was examined through the application of simple reliability concepts; this indicated that the use of a 75 percent confidence level rather than the mean value is to be recommended.

## ACKNOWLEDGEMENTS

The author is indebted to Ms. F. Geermans for undertaking the numerical studies requested herein.

## APPENDIX I DERIVATION OF ALGORITHM NO.1

The estimator for algorithm No. 1 was designed to be extremely simple in application; it is an empirical fit of a rough estimation procedure.

The procedure is based on a rough estimate of $V_{data,i}$, the coefficient of variation of $R_{data,i}$, the i-th element of ranked data values. This is taken to be given by

$$V_{data,i} = V_{par}/\sqrt{2i-1} \qquad (A1)$$

For the case i=1, equation (A1) leads to $V_{data,i} = V_{par}$, which is exact for a Weibull distribution; for the case i= N/2, equation (A1) leads to $V_{data,i} = V_{par}/\sqrt{N}$, which is roughly correct for the mean value of any type of distribution.

Combining equations (1) and (A1) leads to

$$V_{data,p} = V_{par}/\sqrt{2pn} \qquad (A2)$$

where $V_{data,p}$ denotes the coeffecient of variation of the p-th fractile of samples of size n.

Numerical studies indicate that in general equation (A2) does not provide an accurate prediction of $V_{data,p}$. However it is adequate for use in the following equation to estimate the p-th fractile of the parent population.

$$R_{est} = R_{data,p} (1 - A V_{data,p}) \qquad (A3)$$

where A is an arbitrary constant. Numerical studies for the acceptable distributions of the parent population indicates that a value of A=0.85 fits the estimator to the Weibull distribution and gives conservative, but reasonable results for other types of acceptable distributions. The combination of equations (A2) and (A3), with p=0.05 leads to the estimator equation (6).

## APPENDIX II. DERIVATION OF ALGORITHM NO. 2

The motivation for developing this algorithm is the observation that estimator equation of algorithm No. 1, equation (6), provides a good prediction of characteristic values when applied to two parameter Weibull distributions.

This algorithm fits the data of samples to three parameter Weibull distributions. These are then transformed to two parameter distributions by a shift of the origin, and equation (6) of algorithm No. 1 is applied.

## APPENDIX III. THE SAFETY INDEX FOR SAMPLED MATERIAL

In first order reliability theory, the design safety of a structure is obtained by choosing a suitable ratio of strength $R_{par,mean}$ to mean load $S_{mean}$. This leads to a target or nominal probability of failure $p_{F,nom}$ given by

$$p_{F,nom} = Pr\{R<S\} \qquad (A4)$$

If it is assumed that R and S are lognormal distributions, then

$$p_{F,nom} = \Phi (-\beta_{nom}) \qquad (A5)$$

where $\Phi$ ( ) denotes the cumulative frequency distribution of a unit

normal variate, and the nominal safety index $\infty_{nom}$ is given by

$$\beta_{nom} \simeq \frac{\ln (R_{par,mean}/S_{mean})}{\sqrt{V_{par}^2 + V_s^2}} \qquad (A6)$$

where $V_s$ is the coefficient of variation of the load.

Because in the processing of sample data there is an uncertainty in fixing the characteristic value, there is a corresponding uncertainty in specifying the mean value of the allowable load $S_{mean}$.

Hence the true probability of failure, denoted by $p_F$, may be taken to be given by

$$p_F = P_r \{R < TS\} \qquad (A7)$$

where

$$T = R_{est}/R_{est,0.75} \qquad (A8)$$

Assuming R, S and T to be by lognormal distributions leads to

$$P_F = \Phi(-\beta) \qquad (A9)$$

where the true safety index $\beta$ is given by

$$\beta \cong \ln \frac{\{[R_{par,mean}/S_{mean}][R_{est,0.75}/R_{est,mean}]\}}{\sqrt{V_{par}^2 + V_s^2 + V_{est}^2}} \qquad (A10)$$

For the case of an estimate with 50% confidence, a good approximation of the required estimator is given by

$$R_{est} = R_{data,0.05} \qquad (A11)$$

The safety index for this case can be derived in a similar manner to that of equation (A10), and this leads to

$$\beta \simeq \ln \frac{\{R_{par,mean}/S_{mean}\}}{\sqrt{V_{par}^2 + V_s^2 + V_{data,0.05}^2}} \qquad (A12)$$

The specified or nominal safety index $\beta_{nom}$ can be used to determine the

nominal value of $R_{par,mean}/S_{mean}$ from equation (A6), and this is then substituted into equation (A10) or (A12) to provide the true safety index $\beta$.

The parameters $\beta_{nom} = 3.5$ and $V_s = 0.3$ have been used to compute the safety indices shown in Figures 11 and 12.

## APPENDIX IV

## REFERENCES

Benjamin, J.R. and Cornell, C.A. (1970). *Probability, Statistics and Decision for Civil Engineers*. McGraw-Hill Book Company, New York, USA.

Lieberman, G.J. (1958). Tables for one-sided statistical tolerance limits. *Industrial Quality Control*. Vol. 14, No. 10, pp. 7-9.

Marsaglia, G. and Bray, T.A. (1964). A convenient method for generating normal variables. *EIAM Review*. Vol. 6., No. 3, July pp. 260-264.

Wichmann, B.A. and Hill, I.D. (1982). An efficient and portable pseudo-random number generator. *Applied Statistics (Series C)*. Journal of the Royal Statistical Society. Vol. 31., No. 2, pp. 188-190.

## APPENDIX V

## NOTATION

$AF$ = accuracy factor, equation (13)
$EF$ = efficiency factor, equation (15)
$N$ = sample size
$p$ = fractile
$p_i$ = fractile of i-th ranked data value
$p_F$ = probability of failure
$p_{F,nom}$ = specified or nominal probability of failure
$pr\{E\}$ = probability that event E occurs
$R_{est}$ = estimate of characteristic value of $R_{par}$ from sample data
$R_{est,mean}$, $R_{est,0.75}$ = mean and 75-percentile value of $R_{est}$
$R_{data}$ = data value in a sample
$R_{data,i}$ = i-th value of $R_{data}$ in a ranked sample
$R_{data,mean}$ = mean value of $R_{data}$
$R_{data,0.05}$, $R_{data,0.75}$ = five and 75 percentile value of $R_{data}$

$R_{data,p}$ = p-fractile value of $R_{data}$
$R_o$ = parameter defined in equation (9)
$R_{par}$ = strength of parent population
$R_{par,mean}$, $R_{par,0.05}$ = mean and five percentile value of $R_{par}$
$S$ = load effect
$S_{mean}$ = mean value of S
$T$ = $R_{est}/R_{est,0.75}$
$V$ = coefficient of variation
$V_{data}$, $V_{est}$, $V_{par}$, $V_s$ = coefficients of variation of $R_{data}$, $R_{est}$, $R_{par}$ and S
$V_{data,p}$ = coefficient of variation of the p-fractile of $R_{data}$
$V_{data,0.05}$ = coefficient of variation of the 5-percentile valueof $R_{data}$
$V_o$ = parameter defined in equations (8)

$\beta_2$ = safety index
$\beta_{nom}$ = target or nominal value of $\beta$
$\Phi()$ = cumulative distribution function of a unit normal variate
$\eta_{data}$ = coefficient of skewness of $R_{data}$

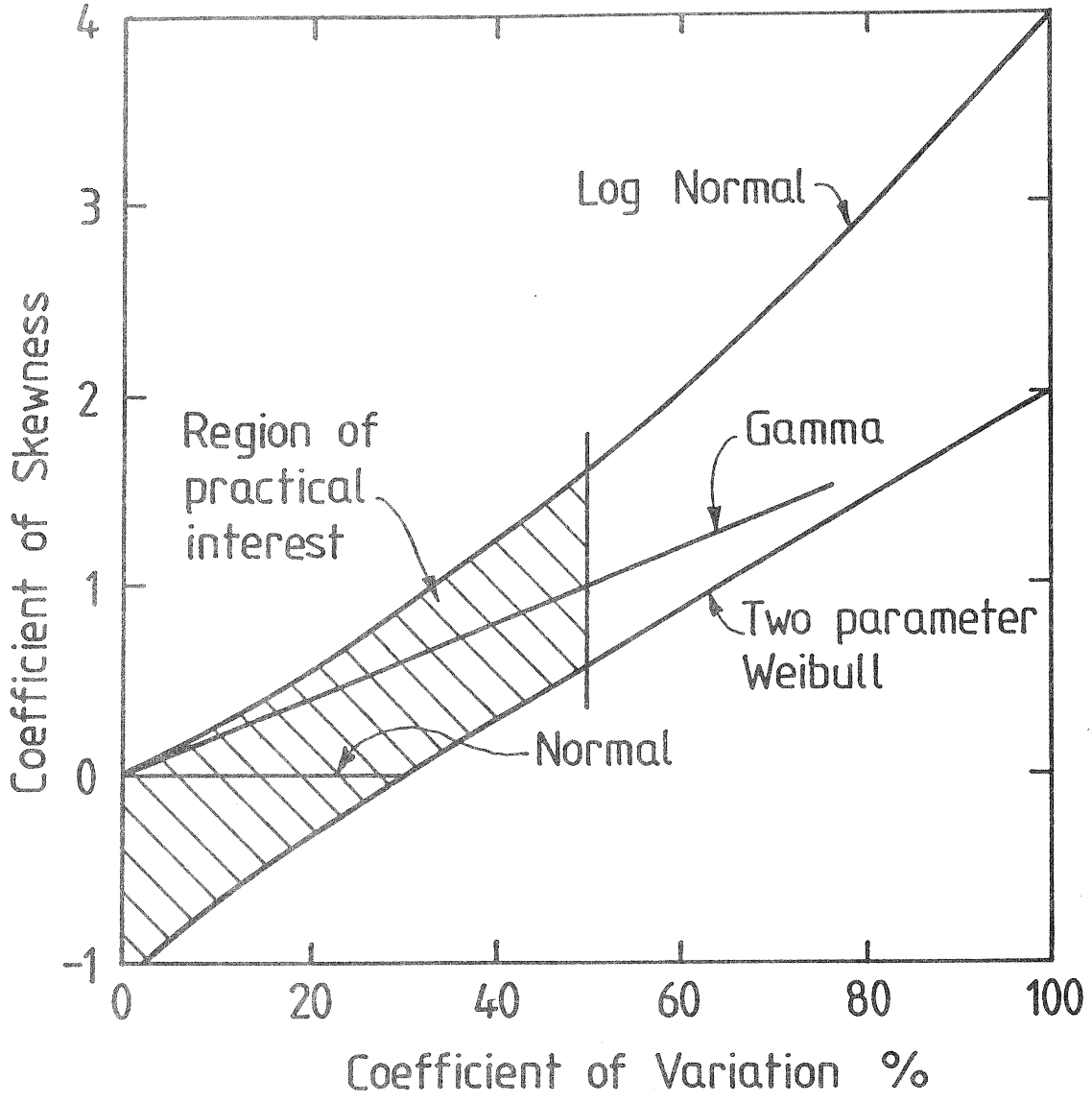


Figure 1 Relationship between coefficients of variation and skewness

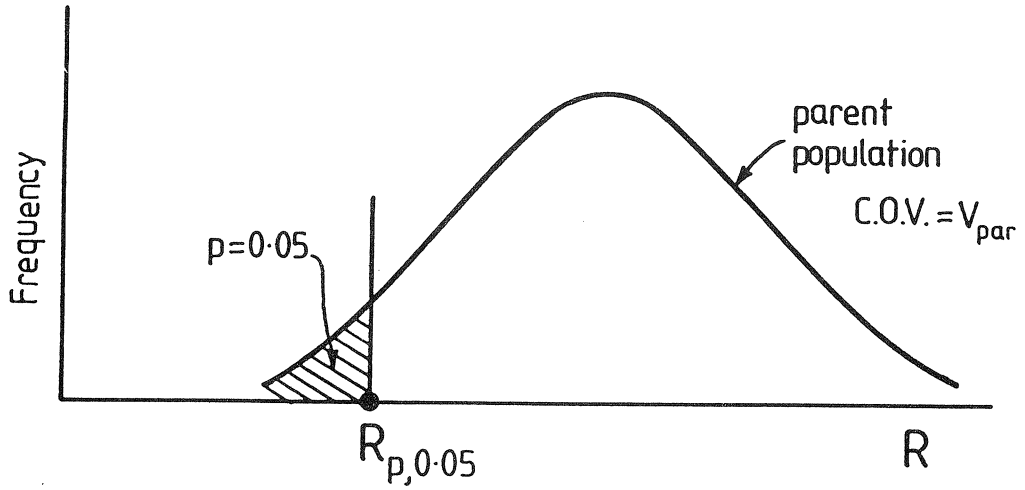


(a) Parent population

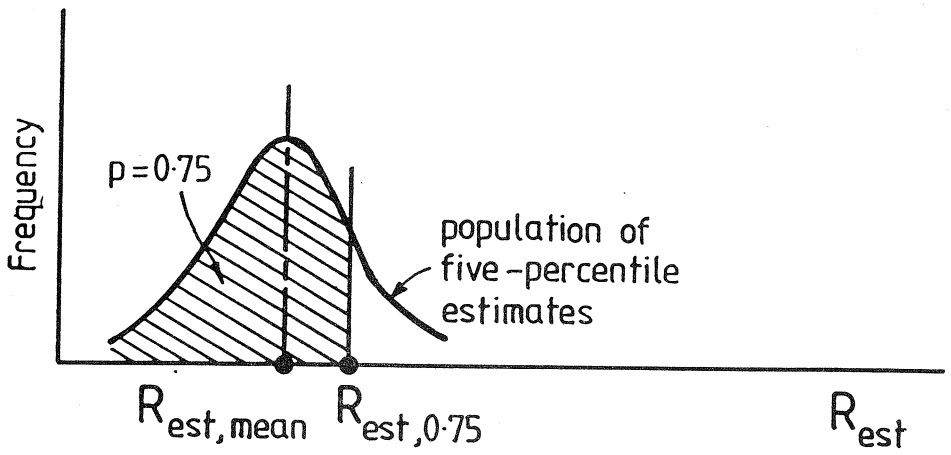


(b) Five-percentile estimates

**Figure 2 Distribution of parent and estimator populations**

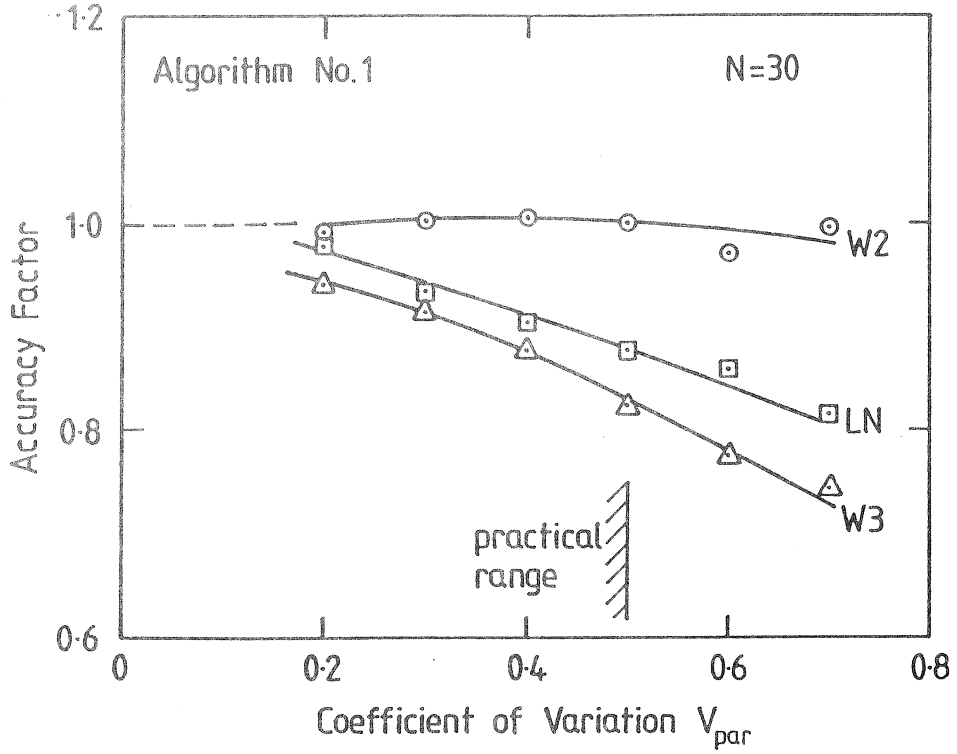


Figure 3 Effect of coefficient of variation on the accuracy factor, algorithm No. 1

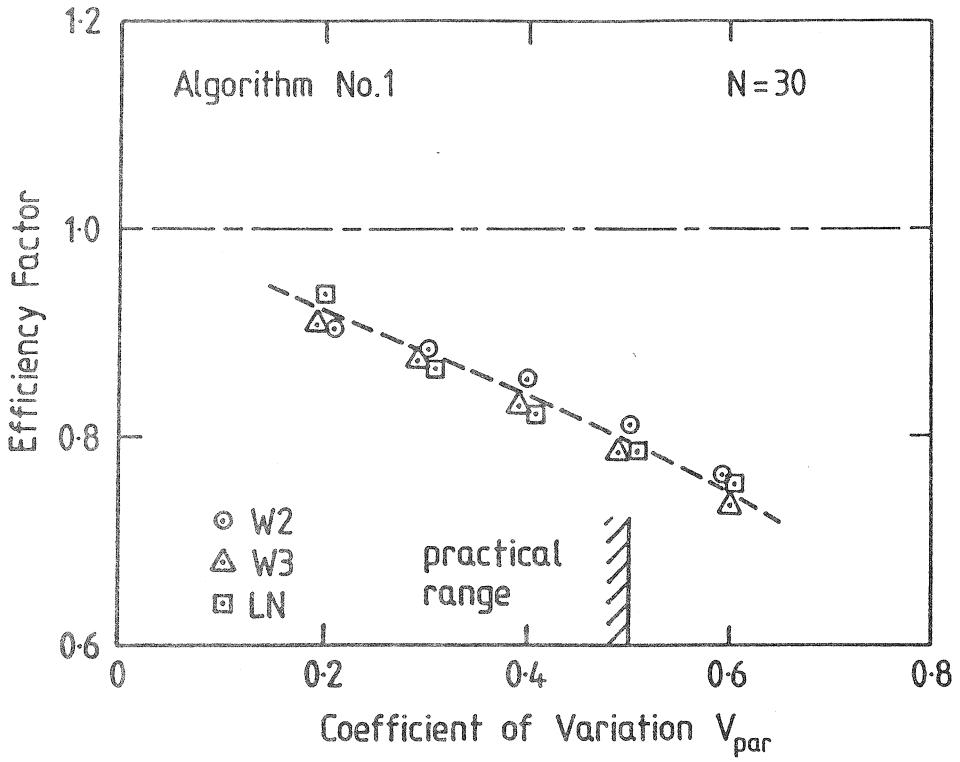


Figure 4 Effect of coefficient of variation on the efficiency factor, algorithm No. 1

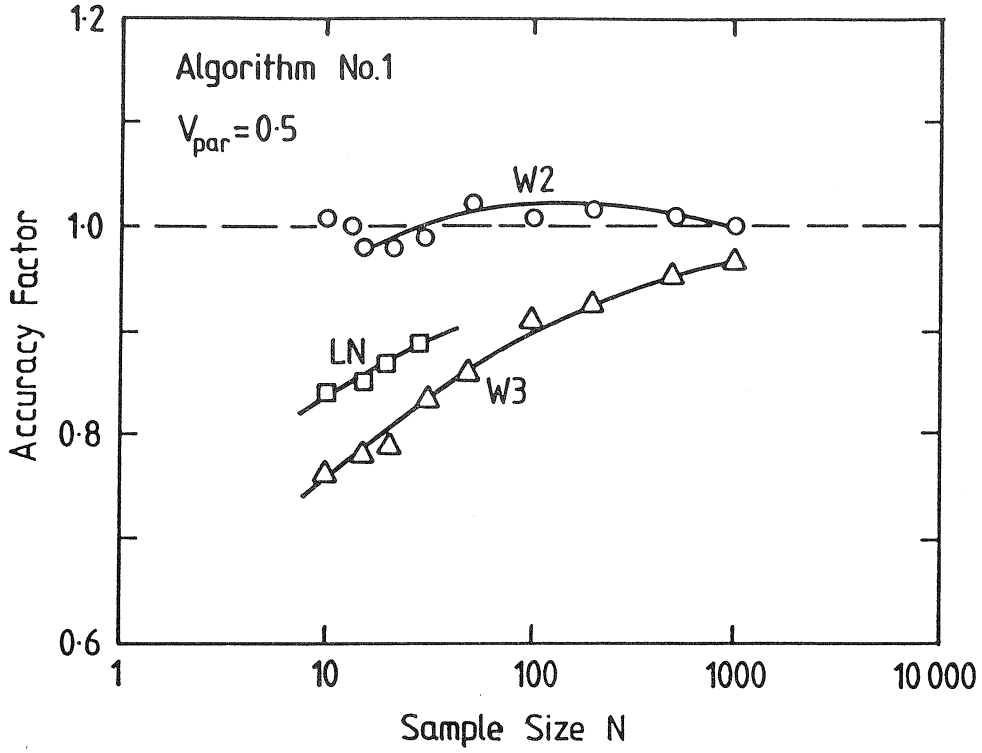


Figure 5 Effect of sample size on the accuracy factor, Algorithm No. 1

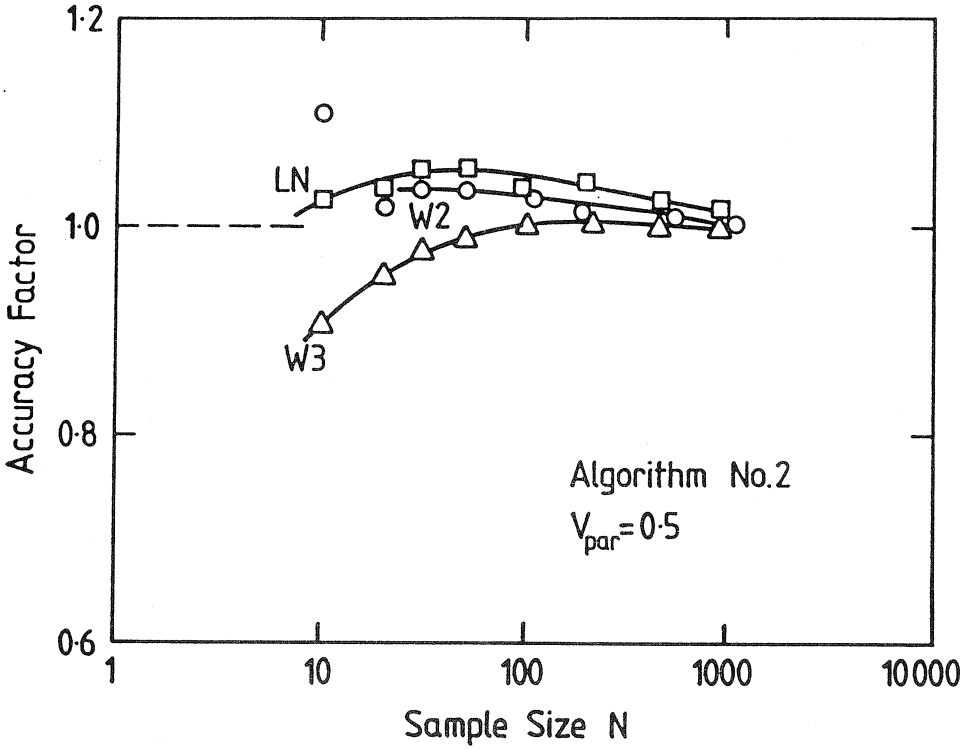


Figure 6 Effect of sample size on the accuracy factor, Algorithm No. 2

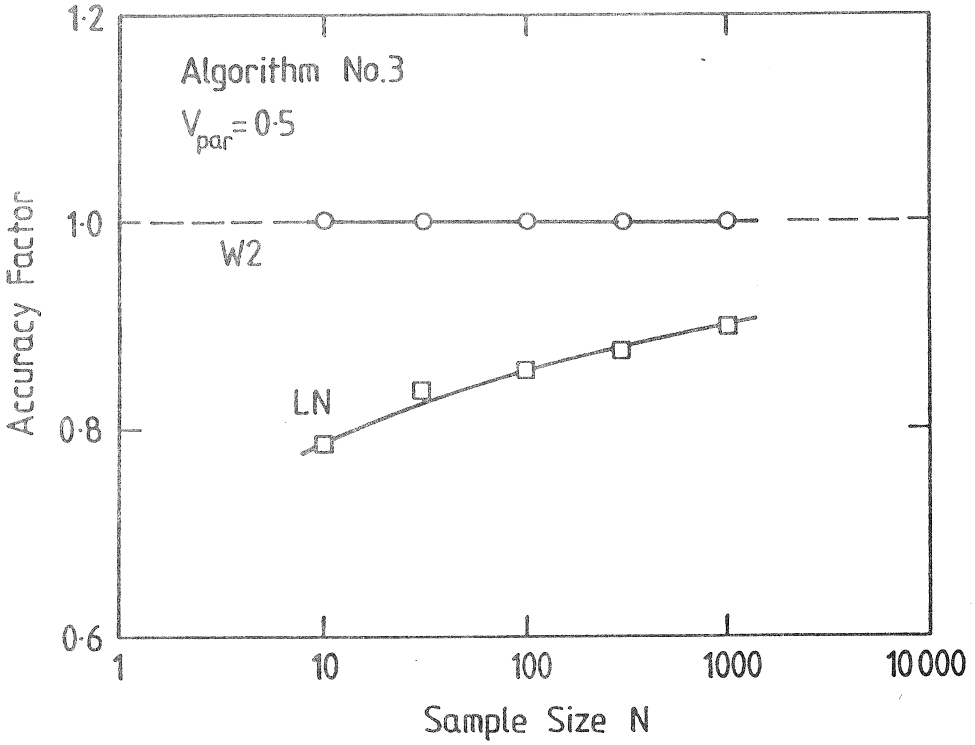


Figure 7 Effect of sample size on the accuracy factor, Algorithm No. 3

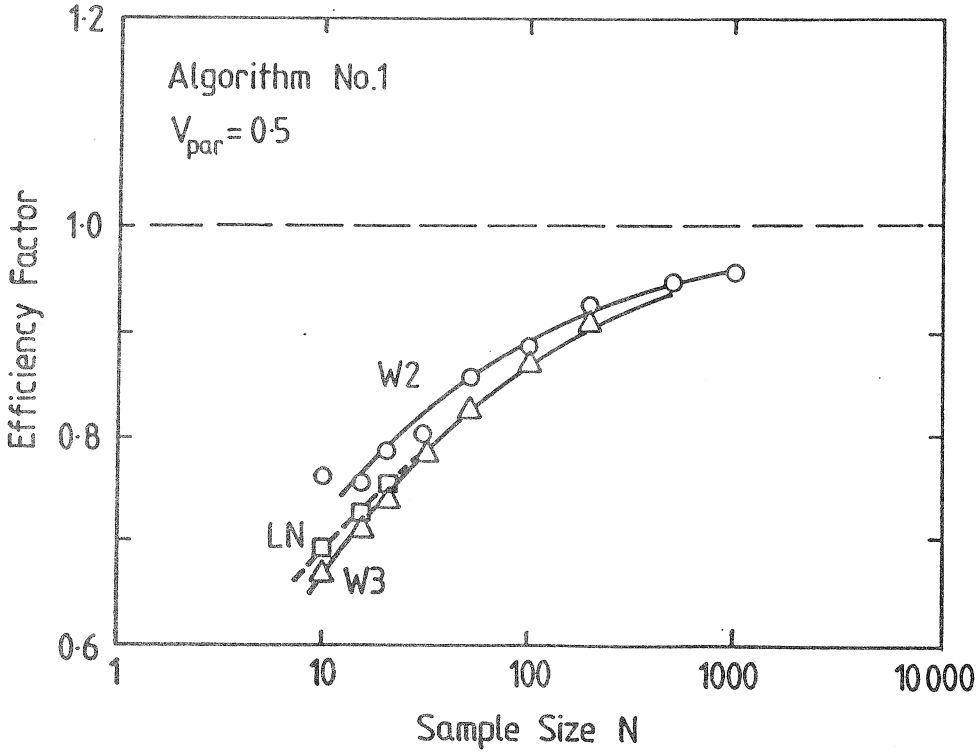


Figure 8 Effect of sample size on the accuracy factor, Algorithm No. 1

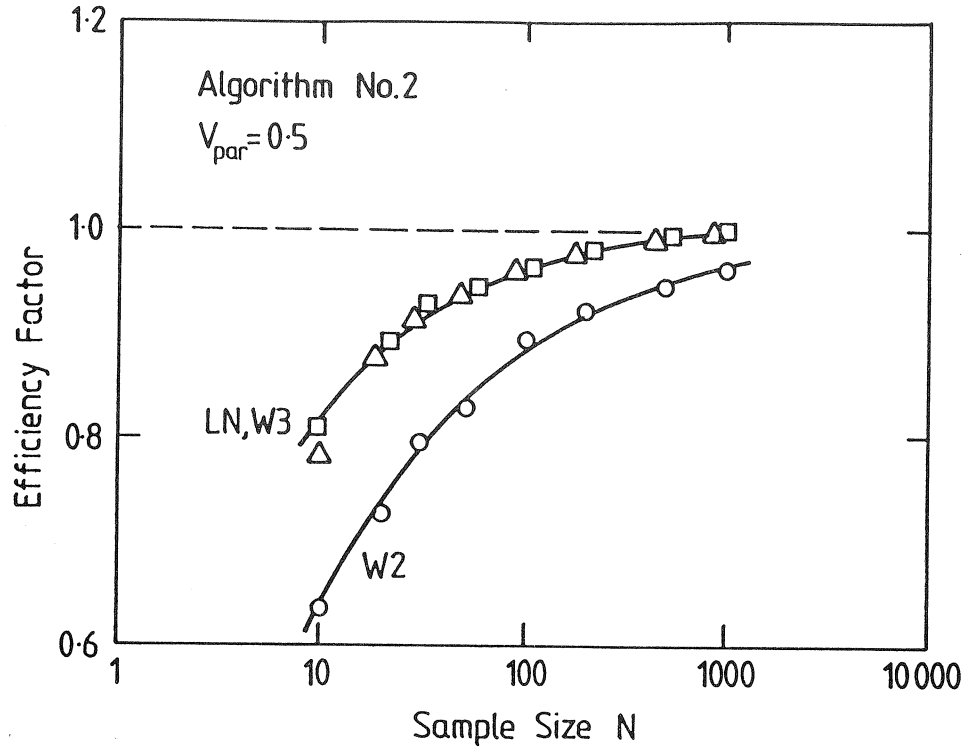


**Figure 9** Effect of sample size on the accuracy factor, Algorithm No. 2

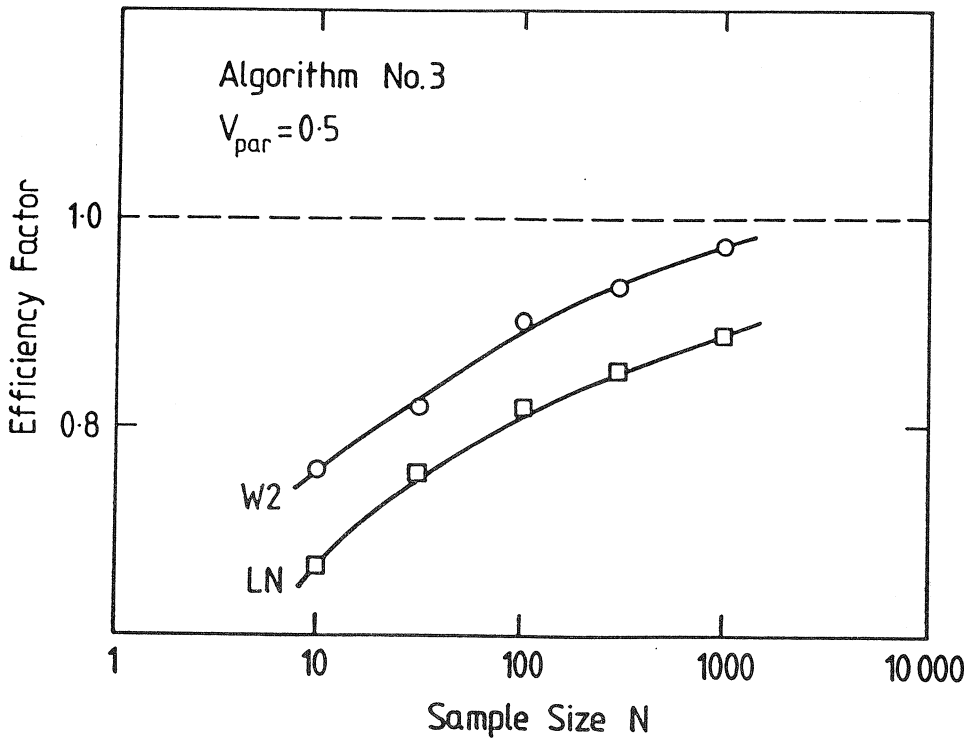


**Figure 10** Effect of sample size on the accuracy factor, Algorithm No. 3

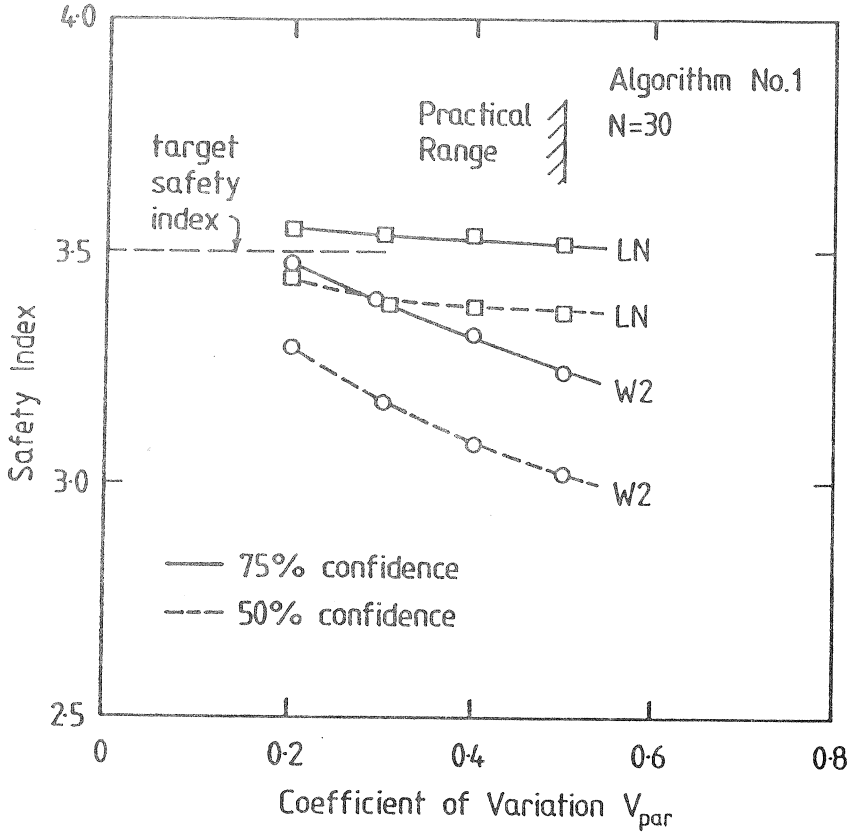


Figure 11 Effect of coefficient of variation on the safety index, Algorithm No. 1.

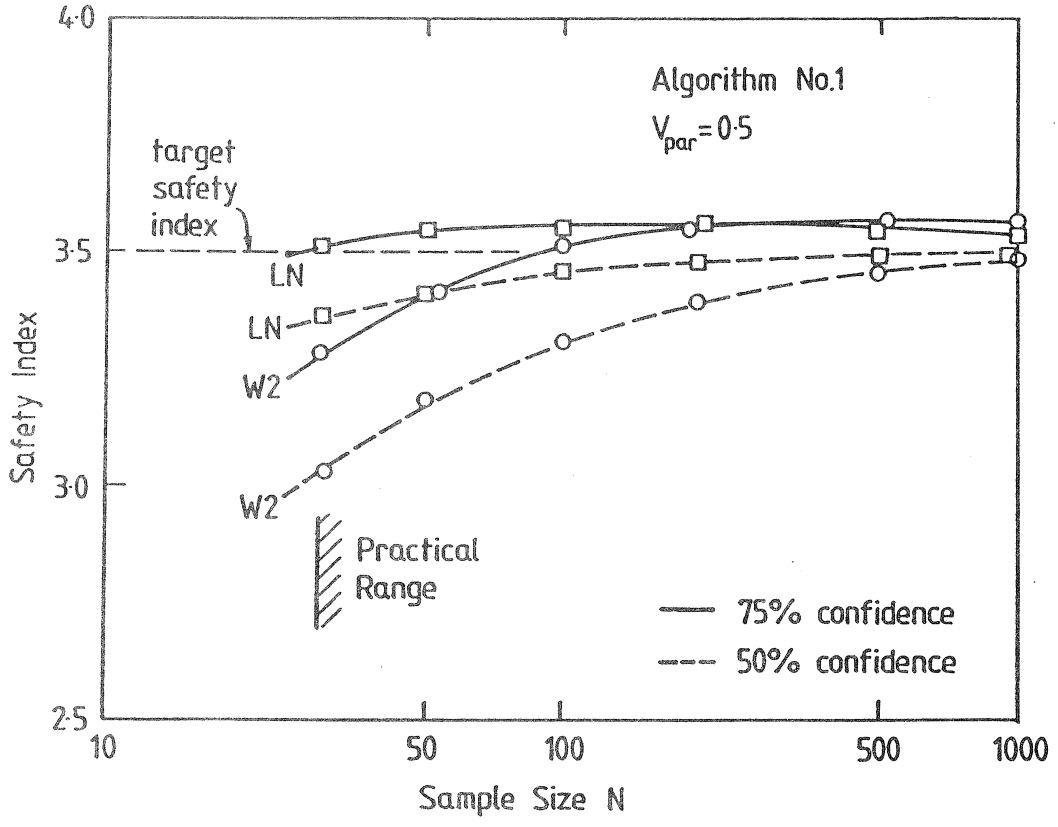


Figure 12 Effect of sample size on the safety index, Algorithm No. 1

ABSTRACT

Mode I fracture toughness of wood can be detemined with CT-specimens, as proposed in the ASTM-standard. In the different orthotropic systems the value of fracture toughness $K_{IC}$ was 200 - 360 kNm $^{-3/2}$ for pine and 200 - 340 kNm $^{-3/2}$ for spruce. The coefficients of variation were about 10 %. The values fit well with those presented in the literature.

Because of the great nonlinearity, for PLV, the $K_{IC}$-value is not a valid material parameter. For the comparison, $K_I$-values were calculated of the maximum load to be 130 - 300 kNm$^{-3/2}$. The coefficient of variation was about 10 % for the TL-systems. Lathe checks weaken the TR and RT systems.

If the fracture toughness is considered to be proportional to the density, the correlation for pine and spruce is $R^2 = 0.6$. The numerical value of fracture toughness in kNm$^{-3/2}$ is roughly the same as the density in kgm$^{-3}$.

If fracture toughness is considered to be a linear combination of the square of density and other variables, somewhat better correlations are achieved: for pine and spruce $R^2 = 0.8$.

## INTRODUCTION

Since the 1960's, there has been fracture mechanics research concerning wood. The first works were made in the USA, Australia and Kanada. The material parameter used was in the beginning free energy $G_C$, then fracture toughness $K_C$. Some trials have been made to the critical J-integral $J_C$.

The inherent material properties of wood cause difficulties: The orthotropy is emphasized by the defects still lowering the transversal strength values of structural timber. In the CIB - design code the relation between the bending strength and tension perpendicular to grain is about 30, and in the Canadian standard correspondingly even 50 for pine and spruce used in the glulam beams.

Could, perhaps, a new design method give us a better understanding about the inhomogeneous nature of wood and help us tolerate the cracks? Could we accept, that the knots sometimes strengthen the material, when they are prohibiting crack growth? Could we make better constructions using fracture mechanics?

Engineer calculates stress concentrations in the structure. Usually, the orthotropic nature must be considered. The thickness of the member plays an important role, and the moisture variations as well as the duration of load shall be taken in to account. This leads to an unsolvable problem, the volume of the task will be enormous.

Scientist makes experiments. We take some pieces with cracks of knots or holes and start loading. We calculate the results as if the material were isotropic: this has been allowed by the great authors before us, and there is tablework available. We call these values, for example, fracture toughnesses. If we are careful, we test different sizes, different moistures, different orientations, different species, tens of pieces of each. This leads to an enormous volume of data, which must be analyzed by sophisticated computer software. Our work has been of this type.

Statistician takes a piece of timber, pointing out the knots and saying: "you'll never manage to do anything when every piece of timber is different without using some kind of simulation". And they intend to develop a normal joist or plank with somehow defined knots and cracks suitable for engineering use.

Actually, they are right: we'll never manage to make a completely covering system. All we can do is to gain a better understanding of the real properties of wood. This will in the best case lead to a more reliable but not too complicate design method, which enables more economically use of timber.

## MATERIAL

At the VTT-Laboratory of Structural Engineering there has been fracture mechanics research concerning wood since 1983. We intend to collect a representative sample of Finnish softwood, in addition PLV ("Kertopuu") has been tested. For the purpose pine was selected at three sawmills and spruce from three others, located in different parts of Finland. This work still continues and gives as a result the expected variation in longitudinal direction of the country.

The experimental material was collected in two studies (Fonselius 1986, Wright 1986), which had slightly different emphasis. In the work of Wright, the specimen size and loading rate were important variables, and the main specimen size was 40 mm. In the work of Fonselius, moisture content was in focus, the main specimen size being 27 mm. Both works consider the effect of orientation and natural material parameters like density, annual ring width, latewood percentage. The total amount of specimens was 167 for pine, 177 for spruce and 211 for PLV.

The pine timber was conditioned at least 1 month at 20 $^{0}$C and 80 % relative humidity. The measured mean moisture content of the specimens was 0.18 - 0.21. For spruce, different humidites were used resulting in moisture contents from 0.09 to 0.22. The lowest moisture content was achieved when the lot was dried 3 h at 35 - 40 $^{0}$C before the experiment

was carried out. Therefore, it had probably not gained equilibrium state and the result is not reliable. The specific gravities varied within natural limits, as well as mean annual ring width and late wood percentage.

CT-specimens of different sizes and orientations were made of the material as defined in the ASTM standard. The thicknesses were 12 - 50 mm. For the pure RL, RT and TR orientations of pine, modified specimens were used. For the spruce, the orientation effect was examined with some smaller specimens, which all had the standard shape. For the modified pine TR specimen, the coefficient of stress intensity is 0.9 times that for the standard specimen. For the 40 mm and 50 mm pine specimens, the orientation varied continuously between TL and RL-systems.

## METHODS

The ASTM standard test method for plane-strain fracture toughness of metallic materials was kept as a basis when a mode I test was developed (ASTM E 399-81, 1981).

Some modifications were made.

- Crack opening displacement was not measured with a clip gauge, but an inductive displacement transducer with press-button fasteners was used instead.
- Crack length was measured as seen outside of the specimen. The blade saw cut was assumed to be straight through the specimen.
- Specimen geometry was modified to fit the lumber size available.

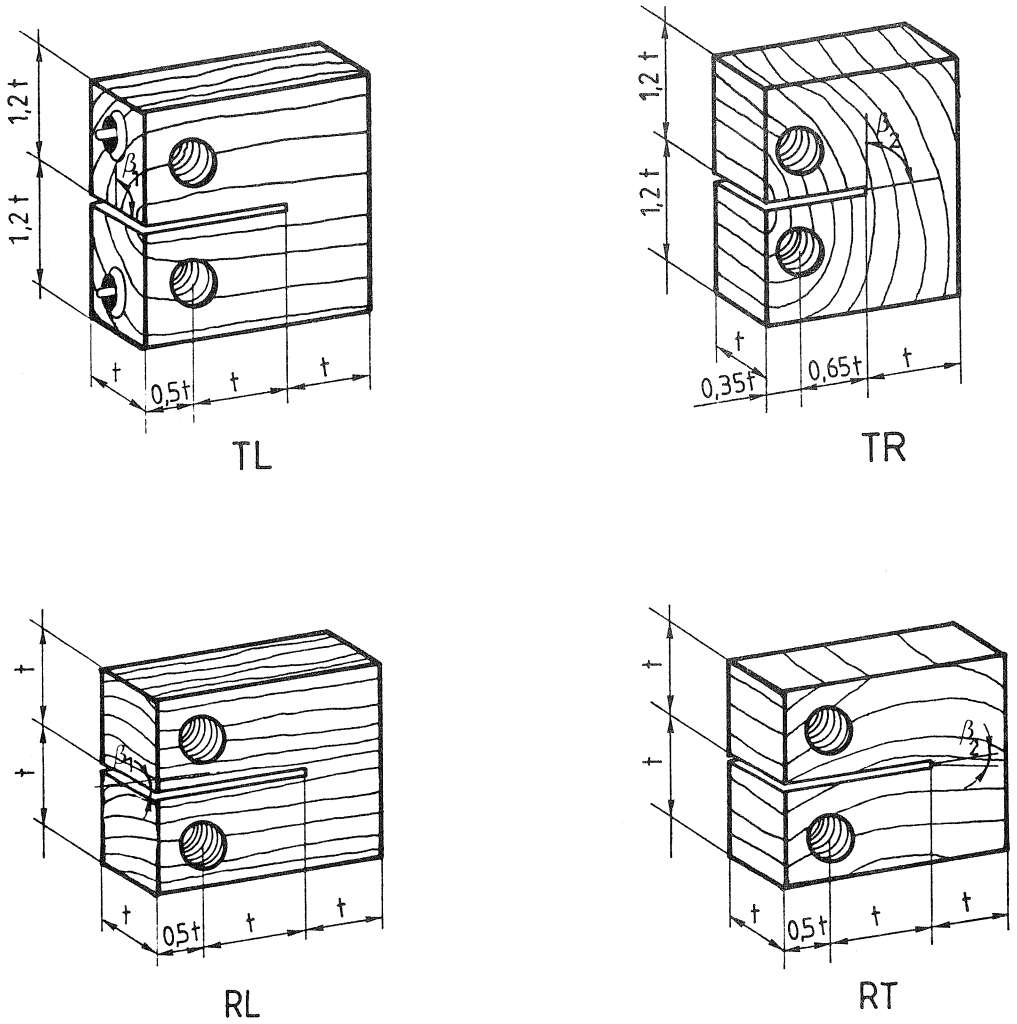


The specimens used at VTT/RAT. For the TL-fracture system, the ASTM standard specimen was used, the thicknesses being 12 to 50 mm (upper left corner). Starter notch was sawn and finished with a thin blade saw. Crack opening displacement was measured with an inductive displacement transducer with press-button fasteners.

For the pine and the fracture systems RL, RT and TR studied by the 25 mm thick CT-specimens, the dimensions of the lumber did not allow a full-size specimen to be used. Therefore, modified specimens were used. For spruce, 20 mm thick standard specimens were used for all systems. For PLV, the thickness was 27 mm.

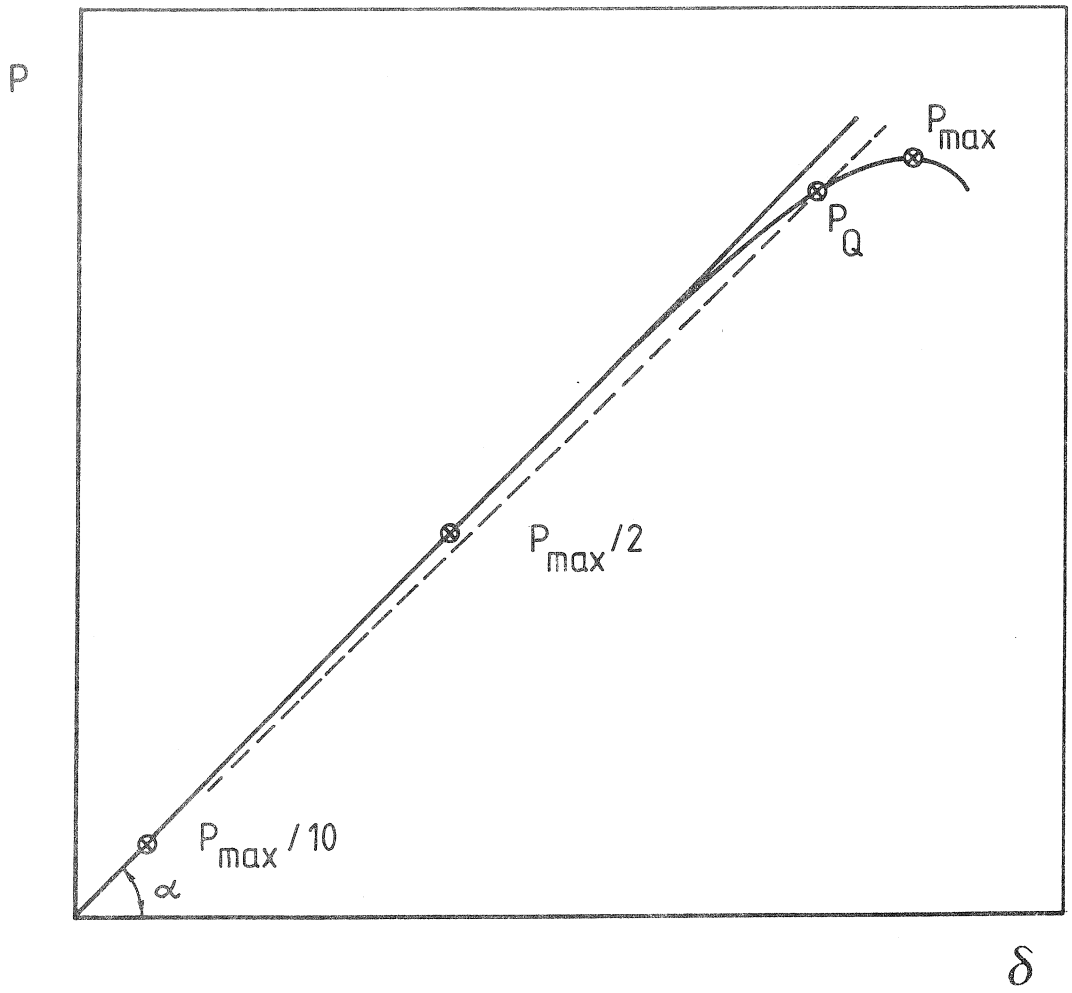


Evaluation of test record.

- Read the maximum load $P_{max}$.
- Draw a straight line through the points of the load-displacement record, which have the loads $P_{max}/10$ and $P_{max}/2$.
- Draw a secant line corresponding to a change in the slope by 5 % (or $1.5^{o}$).
- Read $P_Q$ as the intersection of the P - δ record and secant line.

The loading equipment used was a mechanical home-built constant displacement rate apparatus. Load was measured with a load cell and the load-displacement record was the document achieved.

In addition, the specimen was dyed and an annual ring pattern was printed on paper. Ink was injected in the crack to mark the crack length. Other parameters measured were specific gravity (owen dry weight/volume as green) and moisture content. The specimens were dried 24 hours in owen at 105 $^{o}$C.

## Evaluation of the results

For pine and spruce, a typical load-displacement record shows a continuous, nonlinear appearance, as the ASTM type I. The nonlinearity is partly due to viscoelastic deformation, but it was considered to be solely due to slow crack growth. The amount of nonlinearity is for pine and spruce generally larger than that for brittle metals. The ASTM analysis rule was applied. For PLV, nonlinearity was even larger, up to 1.5.

The acceptance rule for a single test was that all the following conditions must be fulfilled:

- The $P_{max}/P_Q$ ratio must be less than 1.20. The larger value 1.20 was taken, because it was obvious that slow crack growth took place before the maximum load was achieved. For metals the limit 1.10 corresponds to a crack growth 5 times the length of the plastic zone. Our value 1.20 corresponds to a 7.5-fold length of the plastic zone and is well supported by the viscoelastic nature of wood.

- The slope of the line ($\alpha$) must be between $35^{o}$ and $55^{o}$. This condition is not as severe as the former, and very often too low an angle also causes too high a ratio $P_{max}/P_Q$.

- For the whole group the calibration must be such that the mean ratio $P_{max}/P_Q$ is less than 1.16 and the slope is from $40^o$ to $50^o$. These criteria are statistical, and the purpose is to make $P_Q$-readings more reliable. We have also found that the number of tests rejected for the previous reasons grows rapidly when these conditions are not fulfilled.

These requirements were in general fulfilled for our pine and spruce specimens, but not for the PLV.

If no acceptance/rejection criteria were used, the exceptionally tough and nonlinear specimens would increase the mean and standard deviation of $P_Q$ and thus also those of $K_{IC}$. For such structural components no brittle fractures were relevant. It would be erroneous to use $K_{IC}$ values including extensive amount of slow crack growth to predict structural capacity when no or only a small amount of slow crack growth is expected to occur.

At the VTT/Metals Laboratory, we also have carried out standard J-tests for pine, spruce and PLV. The analysis of the results has begun.

## RESULTS

The specimen sizes examined show no clear effect on the fracture toughness. For spruce, the smaller specimens show a larger fracture toughness, but the effect may be mixed with that of orientation, the smaller specimens having a larger amount of the stronger RL-system. Similarly, for pine a weak indication of maximum is visible for the 40 mm specimens. This might also be due to orientation. The smallest 12 mm pine specimens showed a large variation of fracture toughness and several specimens were discharged due to nonlinearity. They seem to be too sensitive to experimental disturbances.

We have no reason to expect, that the size used had any larger effect on the resulting fracture toughness.

The loading rates examined were 5, 10 and 20 mm/min. There was neither, any visible common trend. Compared with the loading rate of J-tests, the values are high: the K-specimens were broken in 5 seconds, and the duration of one loading cycle in J-test was 5 minutes.

If the maximum load values of J-tests are used when calculating K-values, we get about 2/3 of the values in the rapid test. This indicates an effect of loading rate, but obviously there is nothing to prevent the use of common short-term loading rates to achieve short-term K-values.

For the J-tests, we have in the preliminary analysis found that the used ASTM-polynomial solution for the fracture toughness $K_{I\ max}$ fits well in the $K_{IC}$-value calculated by the means of the measured compliance. The proportionality coefficients between $K_{I\ max}$ and $K_{IC}$ are the same as in K-tests. In the simplified cases, where crak propagates in TL or RL system, the orthotropic and isotropic solutions are thus near each other.

One important source of variation in the results is orientation. A marked effect is found, when the TL-system gradually shifts to RL-system. For both pine and spruce, the capacity decreases in the order RL, TL, TR, RT. For PLV, the TL-system has greatest capacity. The differences in the behaviour are due to the structure of the material. In the RL-system, there are the rays reinforcing the clear wood specimen. In the RT-system, the direction of rays is unfavourable and, in addition, the crack tip can avoid the stronger late wood parts.

The observed difference between the facture systems is larger for spruce than for pine for the RL-TL systems but smaller for the TR-RT systems. A systematic difference is caused by the orientation spectrum of the specimens; for pine there were much more intermediate orientations than for spruce, and the limit between the different systems were set at $\beta = 45^0$. Thus the TL-values for pine will be somewhat higher, than if pure RL and TL specimens were used. The effect on RL-values is not so large.

In the case of PLV, the veneers were rotary-peeled and thus had lathe checks. The TL-specimens were made of thinner 27 mm PLV-planks than the other orientation specimens. Those were made of two 75 mm planks, one of which had a lesser density than common for the PLV. This indicates a lesser amount of knots. It is possible that the difference in the planks is reflected in the results. However, the knots mostly will prevent the crack growth in the TL specimens while the lathe checks mostly will weaken the TR and RT specimens. The relatively low RL-fracture toughness found for PLV may be referred to insufficient bond of the glue, which plays out the rays as the reinforcing element.

The non-linearity of the P-$\delta$ curve varies with the fracture system. For the tested materials, the RT-system had smallest $P_{max}/P_Q$ ratio. The other systems cannot be uniquelly ordered. For PLV, the $P_{max}/P_Q$ ratio in general was so high, that there is no meaning to use $P_Q$ or $K_{IC}$. Instead, the J-integral seems to be a better measure for the toughness. In the preliminary analysis, the PLV will show a larger $J_{ICTL}$-value than spruce in combined TL-RL systems, even though the $K_{IC}$ fracture toughness is smaller.

Table 1. Fracture foughnesses K, in $kNm^{-3/2}$, for pine, spruce and PLV in different orthotropic fracture systems.

| | Pine | | Spruce | | PLV | |
|---|---|---|---|---|---|---|
| | $K_{IC}$ | $K_{Imax}$ | $K_{IC}$ | $K_{Imax}$ | $K_{IC}$ | $K_{Imax}$ |
| TL | 330 | 350 | 240 | 270 | 200 | 300 |
| RL | 360 | 380 | 340 | 360 | 160 | 230 |
| TR | 290 | 330 | 230 | 250 | 110 | 160 |
| RT | 210 | 210 | 200 | 210 | 90 | 130 |

Table 2. Fracture toughness K for pine, spruce and PLV calculated out of the results of the J-tests in $kNm^{-3/2}$.

| | Pine TL-RL | Spruce TL-RL | PLV TL |
|---|---|---|---|
| $K_{I\ max}$ polynomial solution | 250 | 150 | 250 |
| $K_{IC}$ compliance method | 220 | 130 | 160 |

The coefficients of variation were about 10 % for pine and spruce and PLV system TL, but upto 25 % for the weaker systems. This is surely an effect of lathe checks.

There is a clear trend to an increasing fracture toughness with increasing density. This kind of property is very common for wood, and has mostly been assigned to the amount of latewood. In the case of fracture toughness, there is no clear dependence on latewood percent, especially within species. However, a more natural fracture mechanics concept is the annual ring width. For pine, there is a nonlinear relationship between the density and annual ring width, which appears as a maximum density for annual ring width 1.5 mm. Therefore, it is difficult to say whether it is the annual ring width or density itself influencing the fracture toughness. The northern locality produces the lowest density.

The first pine specimens indicated no clear dependence on moisture, and therefore the effect of moisture has been examined more carefully for spruce. However, the lowest moisture group (9 %) was rather rapidly dried, and loaded immediately. There is reason to consider the resulting decrease in fracture toughness rather due to moisture gradients than a low moisture. If this group is not taken in to account, no consequent moisture dependence can be seen in our results.

For PLV, a similar kind of moisture independence is found. As for spruce, the rapidly dried group showed a decrease in fracture toughness.

The statistical analysis resulted in some simplified regression equations. For pine, the TL-RL fracture toughness could best be explained by density $\rho$ ($kgm^{-3}$) and orientation $\beta$ (degree)

$$K_{IC} = 66 + 0.560\ \rho + 80.5\ \cos\beta \qquad (1)$$
$$R^2 = 0.53,\ N = 126.$$

For spruce, orientation had a more pronounced effect than density:

$$K_{IC} = 67 + 89{,}6\ \cos^2\beta + 0.510\ \rho \qquad (2)$$
$$R^2 = 0.66,\ N = 138.$$

If all specimens are analyzed together, we get

$$K_{IC} = 153 + 0{,}000754\ \rho^2 + 223\ \cos\beta \qquad (3)$$
$$- 135\ \cos^2\beta + 1{,}47\ \dot{\varepsilon} - 0.796\ b$$
$$R^2 = 0.70,\ N = 264,$$

wher $\dot{\varepsilon}$ is the loading rate (mm/min) and b the thickness (mm) of the specimen. For spruce, the loading rate was generally slower and the specimen size smaller than for pine, this has probably been reflected in the regression equation. Within species, loading rate or specimen size were of no significance.

If the fracture toughness is divided by density, the following equation is found where u is the moisture content in %

$$K_{IC}/\rho = 1{,}07 - 0{,}0000620\ \beta^2 - 0{,}000550\rho \qquad (4)$$
$$+ 0{,}00366\ \varepsilon + 0{,}00330\ \beta - 0{,}00279\ b$$
$$+ 0{,}00405\ u$$
$$R^2 = 0{,}60,\ N = 264.$$

DISCUSSION

The different emphasis in the Fonselius and Wrights works complicates the comparision of the values. However, because the density of spruce is lower than that of pine, the fracture toughness also is lower, as expected. Accordingly, the K-fracture toughness for PLV is about the same than for spruce, but the nonlinearity is larger: therefore PLV will show a larger J-value.

The CT-specimen seems to give reliable fracture toughness values. The isotropic polynomial solution is near the values calculated by the means of compliance measured in the J-test.

Compared with the results found in the literature (Wright & Leppävuori 1984), the following can be stated.

- The relations between the orthotropic fracture systems are not species independent. For Douglas Fir, the TR and RT systems are much stronger than for our materials, but the TL-system is somewhat weaker than found for pine. A possible reason for this is the different amount of rays in these species. The size of the tree used to make specimens out of, also may influence. In our cases the annual rings had a visible curvature. Douglas Fir stems are usually larger, so the specimens have likely been more ideal.

- Density is the most important parameter indicating the TL-RL fracture toughness, besides of the angle of the fracture plane. Roughly, the numerical value of $K_{IC}$ fracture toughness in $kNm^{-3/2}$ is the same as the density in $kgm^{-3}$.

- The effect of moisture is not satisfactory clarified. Our results point to an insensitivity to moisture, but sensitivity to moisture gradients. In the literature, no clear tendency is found.

- The influences of size and loading rate are negligible when common short-term loading is used.

- The PLV-results show clearly the difference between rotary-peeled and sawed plies; they give more uniform $K_{IC}$ values for the different fracture systems.

LITERATURE

ASTM E 399-81, 1981
Standard test method for plane-strain fracture toughness of metallic materials.
Am. Soc. for Test. and Mater.

Fonselius, M 1986
Brottmekanisk studie på gran och skiktträ
[Fracture mechanics of spruce and PLV]
Helsinki University of Technology, Department of Civil Engineering, Division of Structural Engineering, Report 80 • 55 p + app 13 p.

Wright, K 1986
Männyn ja kuusen murtumissitkeyden määrittäminen CT-koekappaleilla
[Fracture toughness of pine and spruce determined with the CT-specimens]
Technical Research Centre of Finland,
Research Reports 387. 78 p + app. 19 p.

Wright, K & Leppävuori, E KM 1984
Murtumismekaniikan soveltaminen puuhun
[Application of fracture mechanics to timber]
Technical Research Centre of Finland,
Research Notes 373. 101 p.

CIB-W18/19-6-4

INTERNATIONAL COUNCIL FOR BUILDING RESEARCH STUDIES AND DOCUMENTATION

WORKING COMMISSION W18 - TIMBER STRUCTURES

# FRACTURE TOUGHNESS OF PINE - MODE II -

by

K Wright
Technical Research Centre of Finland
Finland

MEETING NINETINE
FLORENCE
ITALY
SEPTEMBER 1986

ABSTRACT

Mode II fracture toughness has been studied by means of beam specimens. The material used was of the same lot of Pinus Silvestris as in the previous mode I tests. In short term tests, the value of $K_{IIC}$ fracture toughness was found to be 1760 $kNm^{-3/2}$.

Fracture toughness is best predicted by density and the quarter of density. Moisture content, annual ring angle or other variables had no effect. Correlations were mostly poor, which may depend on the relatively large fracture toughness of the wood from northern Finland compared with its density.

In the long-term tests, the deflection growth was proportional to the bending stress and the 1/3th power of time. The 90 % stress level corresponded to a median life time of 5 h.

## INTRODUCTION

For isotropic materials, like metals, the most common fracture mode is mode I. For fracture problems of this kind, there are theoretical solutions and standardized procedures to estimate the capacity of constructions. For orthotropic materials, there has been some research with the result that if the fracture plane is one of the orthotropic planes and the forces acting are in the orthotropic directions the isotropic solutions are applicable.

Wood has a pronounced orthotropic nature: when the forces no longer coincide with the axes, the crack nevertheless follows the symmetry planes. Thus, inevitably, the mode II fracture or a combination of modes will result. The practical cases cannot be mastered without knowledge of mode II properties.

Unfortunately no standards exist for mode II experiments. In the literature study (Wright & Leppävuori 1984), in principle two kinds of experiments are explained. Some authors have used plate specimens, where the crack is parallel with the grains and the tensional force makes some angle with the crack direction. Varying the grain orientation versus the tension direction, the fracture criteria for a mixed mode crack can be achieved. Very common is also the use of precracked beam specimens with or without the possibility of adding an opening or closing mode I component at the support and loaded by bending, so that the crack tip is in the neutral region of the specimen cross section.

Mode II fracture toughness is usually manyfold compared with mode I fracture toughness. Therefore, even a small amount of mode I loading will weaken the specimen considerably.

## SPECIMENS AND LOADING

In mode II tests, the same pine wood was used as in mode I tests. Spruce has so far not been tested because of the material shortness. The annual ring orientation was chosen to include TL and RL system specimens with intermediate values. Both short-term and long-term loading were used.

For the short-term tests, a manually operated loading apparatus ("Amsler") was used. Load was applied stepwise, and the deflection in the middle was read with a measuring clock. The load was read when the crack growth in mm was 0.5, 1.0, 1.5 and so one. Load was removed, when the maximum load was reached and the crack had reached the loading point.

The moisture histories of the specimens were different. One group was the specimens 40 x 60 $mm^2$ not broken at the long term test, which had a moisture content of 13 to 14 %. The same moisture content had also a group of 40 x 80 $mm^2$ specimens and another of 40 x 60 $mm^2$. In addition, some 40 x 60 $mm^2$ specimens were dried below 13 %, and some of these were loaded immediately, some being again moistured to above 14 % and then loaded. The differences between the specimens are not considerable, but the aim was to get some idea of the behaviour rather than a complete picture.

For the long-term tests, a loading jig was built where six specimens at same time can be loaded. The load was measured for every specimen to be 2.3 kN. Regularly, the deflection was read as for the short-term tests, and the crack growth was inspected by the means of the lines drawn on the specimens. The load was remowed when the crack had grown to the loading point, or the experiment had lasted a sufficienct time, 4 - 5 days for the 20 x 60 $mm^2$ specimens and 29 days for the 40 x 60 $mm^2$ specimens. The humidity in the test room was kept constant 55 %, which leads to a moisture content between 13 and 14 % in the specimens.

The load-deflection curve was achieved as co-ordinate pairs, so the critical load cannot be defined as simply as for the CT-specimens. On the other hand, the measured maximum load is neither a suitable measure for the capacity being linked up with different amounts of crack growth. Therefore, a modified procedure was used.

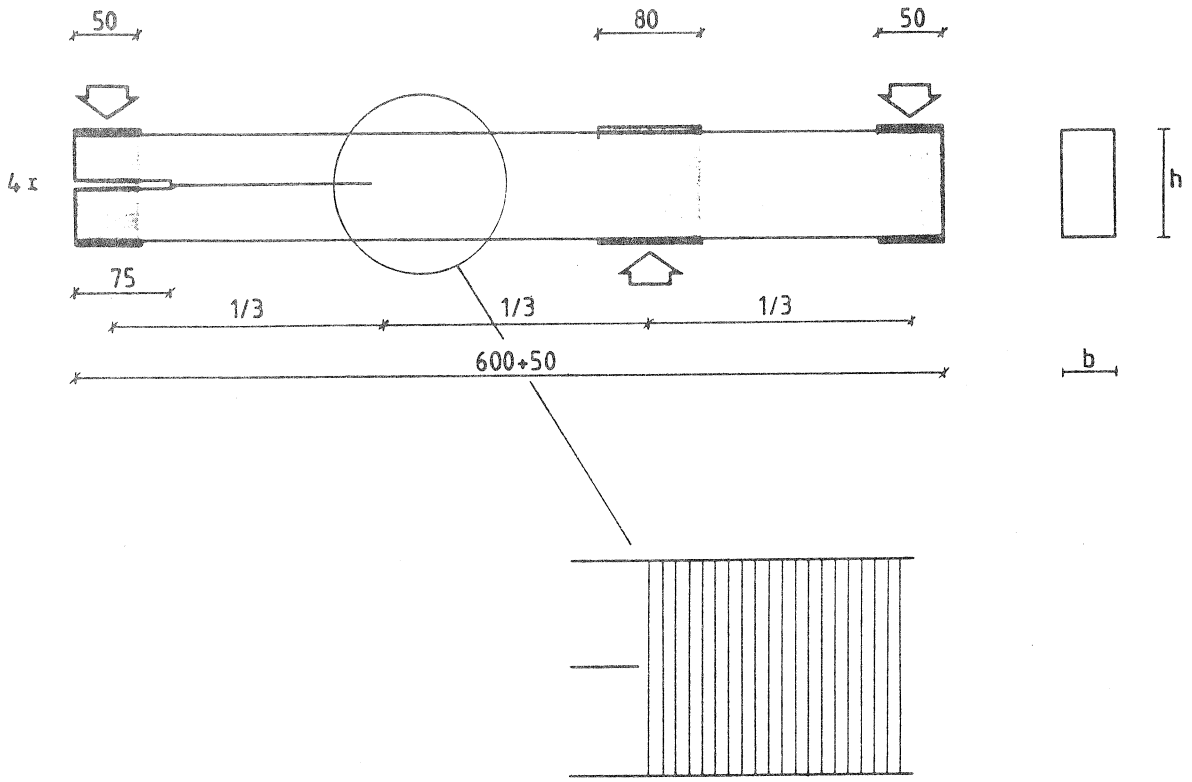


The specimens used at VTT/RAT.

The fracture system was TL-RL. In the short term tests, the thickness b of the specimens was 40 mm and the height h was 60 or 80 mm. In the long term tests, height was 60 mm and thickness 20 or 40 mm.

On the cracked support, teflon bearings were used to prevent crack closure. Crack growth was followed by the means of vertical lines drawn on the specimen, and the deflection was measured in the middle of the beam.

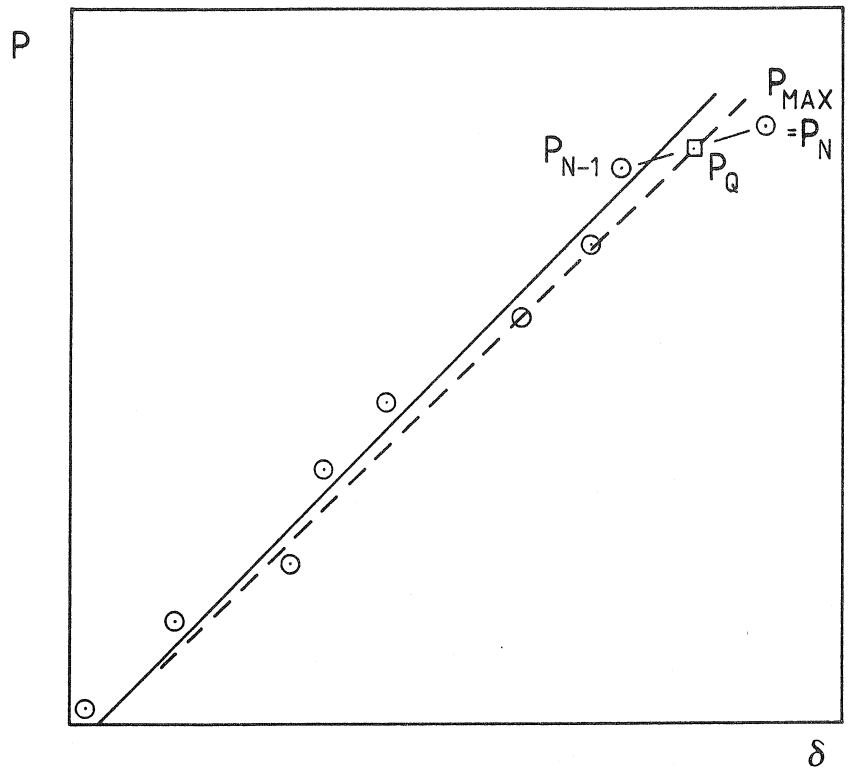


Evaluation of the test result

- Calculate a regression line for the measured P-δ values, the last co-ordinate pair before observed crack growth excluded.
- Adjust the origo to the point P = 0.
- Calculate a secant line corresponding to a change in the slope by 5 %.
- Calculate $P_Q$ as the intersection of the secant line and the line connecting the two latest co-ordinate pairs before observed crack growth.

The same rejection criterion was chosen as for the CT-tests, $P_{max}/P_Q \leq 1.2$. This leads to very few rejections. In 51 tests we rejected two. If the criterion $P_{max}/P_Q \leq 1.1$ were used, we ought to reject almost half of the tests. Reflecting the material properties of wood, a looser criterion can be used, being in any case arbitrary.

The fracture toughness was calculated of the shear stress on the neutral axis $\tau_Q$

$$K_{II} = \tau_Q \, (\pi a)^{1/2} \cdot Y \qquad (1)$$

Coefficient Y has been given by Barrett and Foschi (1977) as well as by Murphy (1979). Murphy's value is some 5 % lower and has been used in this study

$$Y = \left(\frac{h}{\pi a}\right)^{1/2} \left(1.8667 \left(\frac{a}{h}\right) + 0.4800\right). \qquad (2)$$

The material parameters behind the equation are not told.

The modulus of elasticity was calculated according to equation (3)

$$E = \frac{1.348 \cdot P_c}{48 \, \delta_c J} (3L^2 - 4c^2) \qquad (3)$$

where c is the shorter distance between the load and support, L is beam span and $P_c/\delta_c$ the slope of the P-$\delta$ regression line.

## RESULTS

### Short-term tests

The created moisture differences are large enough to be reflected in the values of MOE. Instead, between the fracture toughness values of the various short-term groups, no differences can be found. Neither size nor moisture content seems to cause variation in fracture toughness.

When the mixed TL-RL material was roughly sorted in TL and RL systems according to $45^0$ inclination of annual rings, there were no differences between the groups. A possible reason is the clustering of the orientations near to the limiting value. Pure TL or RL cases are rare. The significant orientation dependence found for CT-specimens was addressed to the reinforcing effect of rays. The shear strength of rays compared with the shear strength parallel with the tracheids is much smaller than the tensile strength of rays compared with the tensile strength perpendicular to the tracheids. Therefore, we do not even expect any larger differences between the TL and RL systems in mode II fracture.

The effect of locality was found for mode I tests as an effect of density, so the northern lower-density specimens produced a lower mode I fracture toughness. For mode II, the northern locality produced the highest fracture toughness median. When fracture toughness was plotted versus $P_{max}/P_Q$, a negative correlation was found. There seems to be a possibility of systematic error because of the pointwise recording of the P-$\delta$ line. If the next last point is arbitrary varied, the calculating procedure gives a lower $P_Q$ when $P_{max}/P_Q$ is higher. On the other hand, if $P_{max}$ is constant for different P-$\delta$ curves, a large $P_{max}/P_Q$ value will yield to low fracture toughness. Both these reasons are for a rejecting criterion.

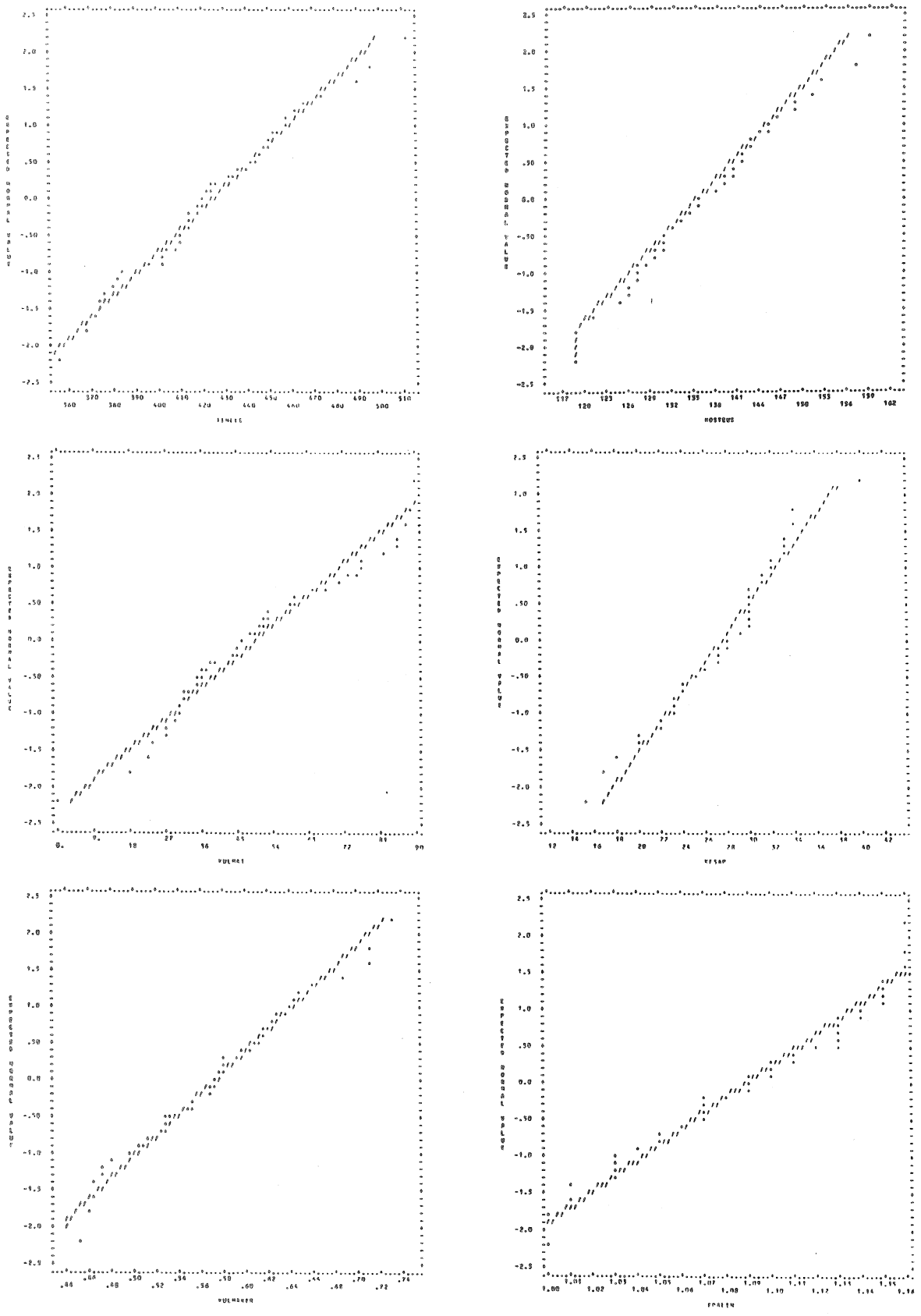

The cumulative distributions were plotted on normal distribution paper. The material shows only slight deviations from the normal distribution for density, moisture, orientation angle, P-$\delta$ slope and $P_{max}/P_Q$.

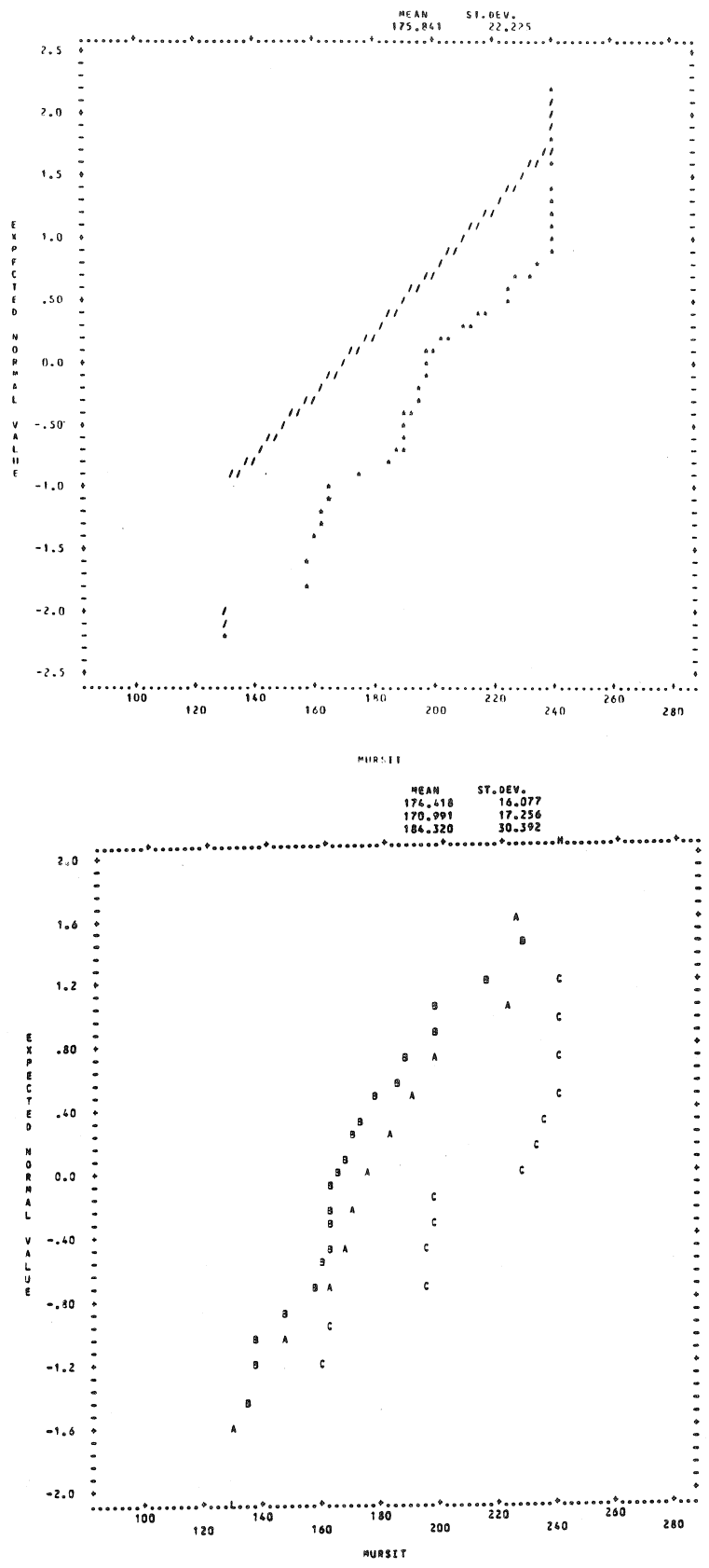


The distribution of the fracture toughness is strongly different from normal distribution. This is because of the anomalous results for northern locality.

Multiple regression analysis was carried out with independent variables density, the same quadrated, orientation angle, annual ring width, moisture, late wood % and size. Correlation R = 0.543 was found for the "best" regression equation

$$K_{IIC} = -7400 + 40.0\ \rho - 0.0431\ \rho^2. \qquad (4)$$

Besides of density, moisture could perhaps influence the fracture toughness, but this was statistically insignificant. Between density and moisture content was found a correlation on one locality, R = 0.474, and the northern locality which has the best fracture toughness has the lowest density. This makes the conclusions concerning density and moisture difficult to draw. The material elucidates, however, the independence of fracture toughness of the other variables.

The mean short-term fracture toughness was for the whole material 1760 $kNm^{-3/2}$ and for the northern specimens 1840 $kNm^{-3/2}$, variation coefficients were 12.6 % and 16.5 %, respectively. The difference is statistically not significant.

Long-term tests

Compared with the stress intensities in the short term test, the constant load 2.3 kN corresponds a stress 90 % of the capacity for the 20 x 60 $mm^2$ specimens and 45 % for the 40 x 60 $mm^2$ specimens. None of the larger specimens were broken during the experiment. The logarithm of lifetime was normally distributed for the smaller specimens, the median corresponds to a lifetime of 5 h.

When the modulus of elasticity was calculated in the short-term tests to be 7670 MPa, from the inital bending, the thinner specimens had a larger MOE 8650 MPa and the thicker specimens a lesser MOE 6480 MPa. The MOE of the thicker specimens should be the same as in the short-term test. The difference may depend on different moisture, different loading or natural scatter.

The effect of time was considered by the means of a regression line between the deflection increase $\Delta\delta$ and time t.

$$\ln \Delta\delta = A + B \ln t \qquad \text{or} \qquad (5a)$$

$$\Delta\delta = e^{A} t^{B}. \qquad (5b)$$

The correlations were for the thick specimens 0.995 and for the thin ones 1.000. When the deflection increase is inserted in mm and time in hours, we get the same value for B for both the thick and thin specimens: mean 0.331, variation coefficient 10 %. For the constant $e^{A}$ we get 0.144 and 0.292. As expected, the deflection increase rate for thin specimens is twice the one for thick specimens.

Specimens which were broken in the long-term tests, showed different fracture manners. Some pieces were broken immediately after the load was applied, and naturally could not give any estimate for the crack velocity. For most specimens, the fracture process was after initialisation so rapid, that only a couple of crack length readings could be made, especially when this happened some time after loading, when the interval between the readings was one day.

Two specimens were so slowly broken, that crack growth could be followed. When the crack grows, the growth rate increases. Every equation deduced from these cases would lack relevancy, and the long-term tests are continued to yield more material. The crack growth rate was of the order of mm/min at the slow crack growth.

CONCLUSIONS

- The fracture toughness values calculated by different methods do not markedly deviate from each other. Stress intensity depends linearly on the crack length.

- The short-term tests had a mean moisture content of 14 % and density of 420 $kgm^{-3}$. Fracture toughness was 1760 $kNm^{-3/2}$. This is 5.4 times mode I TL fracture toughness, which fits well the literature study.

- In regression analysis, significant variables were density $\rho$ and $\rho^2$, but the correlation was low, R = 0.54.

- The long-term tests gave fracture only by 90 % stress level; median life-time was 5 h. The stress level 45 % proved to be too low.

- Deflection increase rate was for the thin specimens twice that for thick specimens. The deflection increase rate was proportional to $t^{1/3}$.

- Crack growth could not be studied due to the rapid fracture process.

Literature

ASTM E 399-81, 1981
Standard test method for plane-strain fracture toughness of metallic materials.
Am. Soc. for Test. and Mater.

Barrett, J.D., Foschi, R.O., 1977
Mode II stress-intensity factors for cracked wood beams.
Eng. Fract. Mech. 9:371-378

Murphy, J.F., 1979
Strength of wood beams with end splits. U.S. For.
Serv. Res. Pap. FPL 347 U.S. For. Prod. Lab.,
Madison.

Wright, K. & Leppävuori, E.K.M., 1984
Murtumismekaniikan soveltaminen puuhun
[Application of fracture mechanics to timber]
Technical Research Centre of Finland,
Research Notes 373. 101 p.

CIB-W18/19-6-5

INTERNATIONAL COUNCIL FOR BUILDING RESEARCH STUDIES AND DOCUMENTATION

WORKING COMMISSION W18 - TIMBER STRUCTURES

# DRYING STRESSES IN ROUND TIMBER

by

A Ranta-Maunus
Technical Research Centre of Finland
Finland

MEETING NINETINE
FLORENCE
ITALY
SEPTEMBER 1986

ABSTRACT

The internal stresses caused by drying are often responsible for lowering the value of timber by causing checks and splits. The residual stresses also reduce the remaining load carrying capacity. However, the residual stresses of timber or lumber are not well known due to several difficulties.

This paper presents a strength-of-materials approach for the analysis of drying stresses in round timber. The behaviour of wood is assumed to be cylindrically orthotropic both in elastic deformation and drying shrinkage. An analytical determination of stresses is derived when also the moisture distribution is cylindrically symmetric. The stress relaxation is taken into account by the adaptation of linear viscoelasticity.

The stress reversal during drying is demonstrated by the analysis.

## INTRODUCTION

On the surface of timber a tensile tangential stress develops during drying, which is often high enough to split the timber. During the slope of drying process the stresses are reversed, as generally accepted, in a way that in dry timber tangential stresses are tensile in inner parts of wood and compressive near the surface. Drying stresses are caused on one hand by the moisture gradient in wood and on the other hand by various shrinkage properties in tangential and radial directions.

The analytical solution of the state of stresses, when the moisture content as a function of time and space is known, is possible only in special cases. A difficulty is caused by the need of the combination of rectangular boundary conditions of timber with the natural cylindrical orthotropy of wood. The source of another set of problems is the viscoelastic behaviour of wood and modeling of the impact of moisture variations into the stress relaxation.

In order to obtain an analytical solution the following assumptions are made in the analysis of this paper:

- cylindrical symmetry is assumed for geometry and moisture content
- wood is presumed to be a linear viscoelastic material

This includes that a clear round timber is analyzed. A similar problem already has been studied by Arvo Ylinen /1/. His approach comprised an elastic analysis of drying stresses caused by a decreased constant moisture content (no gradient).

In the analysis of drying stresses in timber this paper is a preliminary work. We are continuing the work by developing numerical methods applicable for the analysis of lumber and timber. Efforts are also made in order to experimentally determine the stress relaxation properties of wood.

## ELASTIC ANALYSIS

A cylindrical piece of wood is analyzed. All properties and the moisture content u are assumed to be solely dependent on the r-co-ordinate (Fig.1). The conventional equations needed for a 2-dimensional stress analysis with cylindrical symmetry are as follows.

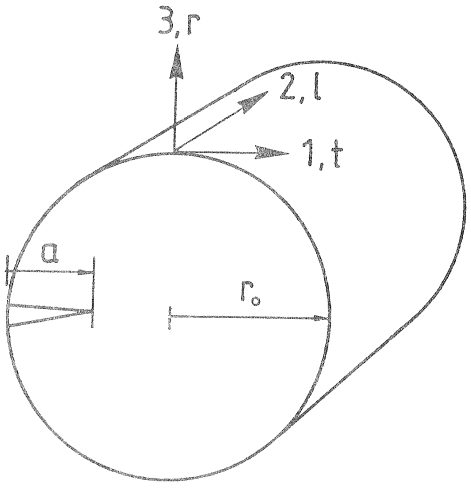


Fig. 1 Co-ordinate systems (1, 2, 3) or (t, l, r) applied in the analysis of round timber. The split with depth a is used in the fracture mechanics part of the paper.

1. Equilibrium equation of stresses

$$\sigma_r' + \frac{\sigma_r - \sigma_t}{r} = 0 \tag{1}$$

2. Strain-displacement relations

$$\varepsilon_t = \frac{v}{r} \text{ and } \varepsilon_r = v' \tag{2}$$

3. The constitutive equation of a rhombic orthotropic material

$$\begin{aligned} \varepsilon_t &= S_{11}\sigma_t + S_{13}\sigma_r + A_1 u \\ \varepsilon_r &= S_{13}\sigma_t + S_{33}\sigma_r + A_3 u \end{aligned} \tag{3}$$

where constants $S_{ij}$ and $A_i$ have slightly different values for the states of plane stress and plane strain and u means the change of moisture content from the theoretically stressless initial stage.

The derivation of stress is given more detailed in ref. /2/. Here the result is shown in case of a parabolic moisture gradient

$$u = u_0 + \Delta u \left(\frac{r}{r_0}\right)^2 \tag{4}$$

The boundary conditions

$$v(0) = 0 \text{ and } \sigma_r(r_0) = 0$$

result in the following expressions for stresses:

$$\sigma_r = f_1(r)u_0 + f_2(r)\Delta u \tag{5}$$

$$\sigma_t = f_3(r)u_0 + f_4(r)\Delta u \tag{6}$$

where

$$f_1(r) = \frac{A_1 - A_3}{S_{11} - S_{33}} \left[ \left(\frac{r}{r_0}\right)^{-1+\sqrt{1-k}} - 1 \right]$$

and $k = (S_{11} - S_{33})/S_{11}$

$$f_2(r) = \frac{3A_1 - A_3}{(8+k)\ S_{11}} \left[ \left(\frac{r}{r_0}\right)^{-1+\sqrt{1-k}} - \left(\frac{r}{r_0}\right)^2 \right]$$

$$f_3(r) = \frac{A_1 - A_3}{S_{11} - S_{33}} \left[ \sqrt{1-k}\ \left(\frac{r}{r_0}\right)^{-1+\sqrt{1-k}} - 1 \right] \qquad (7)$$

$$f_4(r) = \frac{3A_1 - A_3}{(8+k)\ S_{11}} \left[ \sqrt{1-k}\ \left(\frac{r}{r_0}\right)^{-1+\sqrt{1-k}} - 3\ \left(\frac{r}{r_0}\right)^2 \right]$$

The stresses above are singular; for r = 0 we obtain infinite stresses. This can be avoided by choosing different boundary conditions. If we consider a stock of wood as a cylinder containing a small hole in the centre /1/, having radius $r_1$, we may set boundary conditions

$$\sigma_r(r_1) = \sigma_r(r_0) = 0.$$

For trees having a soft core this is a realistic assumption, which results in the following expressions for the multipliers $f_i$ in Eqs. (5) and (6).

$$f_1(r) = \frac{A_3 - A_1}{S_{11} - S_{33}} \left\{ f(r) \left[ \left(\frac{r}{r_1}\right)^{\sqrt{1-k}} - \left(\frac{r_1}{r}\right)^{\sqrt{1-k}} - \frac{r_1}{r_0} \left[ \left(\frac{r}{r_0}\right)^{\sqrt{1-k}} - \left(\frac{r_0}{r}\right)^{\sqrt{1-k}} \right] \right] + 1 \right\}$$

$$f_2(r) = \frac{A_3 - 3A_1}{(8+k)\ S_{11}} \left\{ f(r) \left[ \left(\frac{r}{r_1}\right)^{\sqrt{1-k}} - \left(\frac{r_1}{r}\right)^{\sqrt{1-k}} - \left(\frac{r_1}{r_0}\right)^3 \left[ \left(\frac{r}{r_0}\right)^{\sqrt{1-k}} - \left(\frac{r_0}{r}\right)^{\sqrt{1-k}} \right] \right] + \left(\frac{r}{r_0}\right)^2 \right\}$$

$$f_3(r) = \frac{A_3 - A_1}{S_{11} - S_{33}} \left\{ \sqrt{1-k}\ f(r) \left[ \left(\frac{r}{r_1}\right)^{\sqrt{1-k}} + \left(\frac{r_1}{r}\right)^{\sqrt{1-k}} - \frac{r_1}{r_0} \left[ \left(\frac{r}{r_0}\right)^{\sqrt{1-k}} + \left(\frac{r_0}{r}\right)^{\sqrt{1-k}} \right] \right] + 1 \right\} \qquad (8)$$

$$f_4(r) = \frac{A_3 - 3A_1}{8 + k} \frac{1}{S_{11}} \left\{ \sqrt{1-k}\ f(r) \left[ \left(\frac{r}{r_1}\right)^{\sqrt{1-k}} + \left(\frac{r_1}{r}\right)^{\sqrt{1-k}} - \left(\frac{r_1}{r_0}\right)^3 \left[ \left(\frac{r}{r_0}\right)^{\sqrt{1-k}} + \left(\frac{r_0}{r}\right)^{\sqrt{1-k}} \right] \right] + 3\left(\frac{r}{r_0}\right)^2 \right\}$$

where $$f(r) = \frac{r_0}{r} \frac{1}{\left(\frac{r_1}{r_0}\right)^{\sqrt{1-k}} - \left(\frac{r_0}{r_1}\right)^{\sqrt{1-k}}}$$

The comparison of stresses obtained from these two sets of multipliers $f_i$ in (7) and (8) shows that there is no practical difference in stresses for $r > 0.1\ r_0$ when $r_1 = 0.01\ r_0$. Only if we are interested in stresses very close to the centre of stock the difference appears as illustrated in Fig.2. In that area, of course, the singular solution is not suitable for practical applications.

The stresses $\sigma_r$ (Eq.(5)) and $\sigma_t$ (Eq.(6)) obtained by the application of coefficients in Eqs (7) are illustrated in Figure 3.

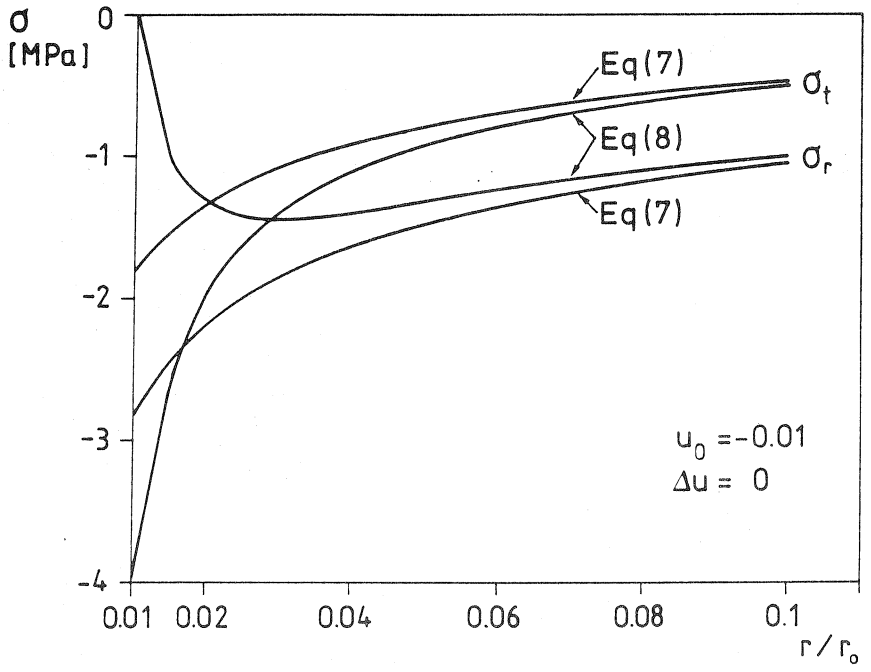


Fig. 2 Comparison of the singular solution of stresses (7) with the solution of a cylinder having a hole (8) with radius = 0.01 $r_0$.

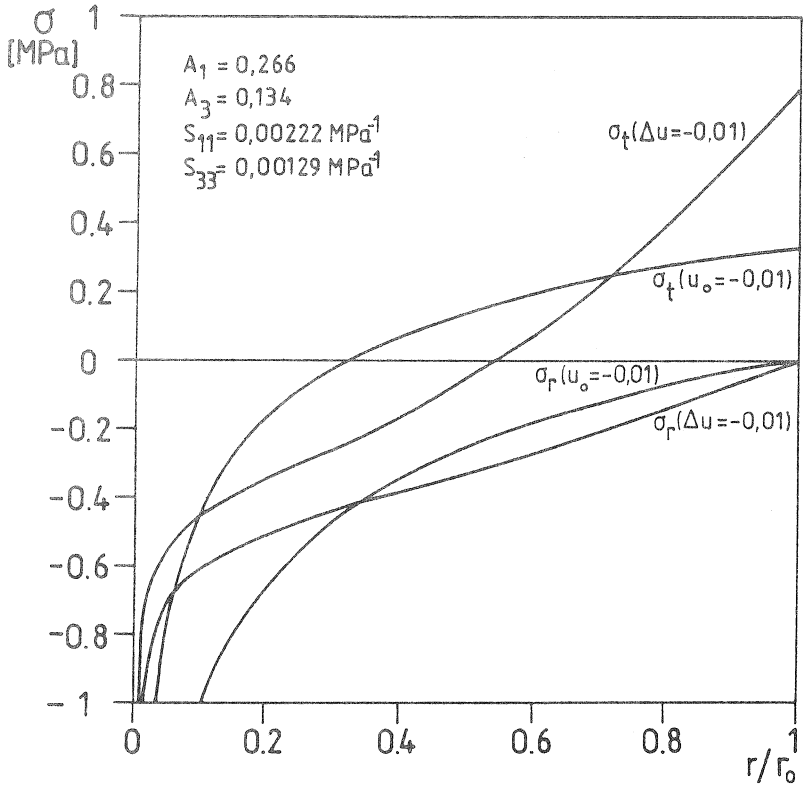


Fig. 3 Drying stresses in round timber in accordance with the elastic solution (7).

## VISCOELASTIC ANALOGY

The stresses obtained by elastic analysis are not of high practical importance because wood behaves in fact more like a viscoelastic material. Especially during drying we may expect a great amount of stress relaxation. In the following it is assumed that wood behaves like a linear viscoelastic material in tangential and radial directions. The analogy between linear elastic and viscoelastic solutions, which is explained in many textbooks /3/, is utilized. For stresses we can write

$$\sigma_r(r,t) = f_1(r)F_0(t)u_0 + f_2(r)F_1(t)\Delta u \qquad (9)$$

$$\sigma_t(r,t) = f_3(r)F_0(t)u_0 + f_4(r)F_1(t)\Delta u \qquad (10)$$

where $f_i$'s are the same functions as in elastic solutions, and $F_0(t)u_0$ as well as $F_1(t)\Delta u$ are related to the moisture history during the period of observation.

As the first numerical example the most simple viscoelastic model, Maxwell's material, is assumed for wood. In that model, an elastic and viscous element are connected in series. The constitutive equation is written as

$$\dot{\varepsilon} = \frac{1}{E}\,(\dot{\sigma} + \mu\sigma) \quad .$$

The application of this material's model is appropriate only if the parameter $\mu$ is based on experimental data selected suitable for the particular time interval to be analyzed.

In Table 1 the time-dependent functions $F_0$ and $F_1$ are given for Maxwell's material and certain moisture histories. Note that $F_0$ and $F_1$ are identical (=F) if the time-dependence of $u_0$ and $\Delta u$ is the same. The scale of time is selected in a way that t = 0 is the stressless initial state and the latest time of interest is t = 1. In table 1 the time-dependent part of moisture histories is separated from the maximum amplitude, i.e.

$$u_0(t) = u_0 f(t) \quad \text{or}$$

$$\Delta u(t) = \Delta u\, f(t)$$

where f(t) is a function obtaining a maximum value = 1 for $0 \leqslant t \leqslant 1$.

As an example we consider the drying of the core of timber from 30 % to 15 % moisture content following the function

$$u_0(t) = -0.15(1-\cos(\pi t/2)). \qquad (11)$$

Two options are considered for the moisture gradient: a prompt drying of the surface

$$\Delta u(t) = -0.15\,\cos(\pi t/2) \qquad (12)$$

and a gradual drying

$$\Delta u(t) = -0.075 \sin \pi t \qquad (13)$$

Figure 4 illustrates how the tangential stress at surface, $\sigma_t(r_0)$, develops during drying. The curves are shown for different values of relaxation parameters $\mu$. If the tangential tensile strength of this wood is 3 MPa, we notice that the timber would be cracked even in the case of the slower drying and $\mu = 4$. Because we have chosen a relative time scale, the value $\mu = 4$ can be interpreted also in such a way as points that drying time (=1) has been chosen so that the creep deformation under constant stress would be 4 times the elastic deformation.

Table 1. Time-dependence functions F for Eqs (9) and (10) in case of Maxwell's material and moisture histories f(t). Valid for time-interval $[0,1]$.

| f(t) | F(t) |
|---|---|
| 1 (step function) | $e^{-\mu t}$ |
| $1.58\ (1-e^{-t})$ | $\frac{1.58}{\mu-1}(e^{-t}-e^{-\mu t})$ |
| $t$ | $\frac{1}{\mu}(1-e^{-\mu t})$ |
| $0.5\ (1-\cos \pi t)$ | $0.5\ \frac{\pi^2}{\pi^2+\mu^2}\left(\frac{\mu}{\pi}\sin \pi t - \cos \pi t + e^{-\mu t}\right)$ |
| $1-\cos \frac{\pi}{2} t$ | $\frac{(\pi/2)^2}{(\pi/2)^2+\mu^2}\left(\frac{2\mu}{\pi}\sin \frac{\pi t}{2} - \cos \frac{\pi t}{2} + e^{-\mu t}\right)$ |
| $\sin \frac{\pi}{2} t$ | $\frac{0.5\ \pi\mu}{(\pi/2)^2+\mu^2}\left(\frac{\pi}{2\mu}\sin \frac{\pi t}{2} + \cos \frac{\pi t}{2} - e^{-\mu t}\right)$ |
| $\cos \frac{\pi t}{2}$ | $\frac{1}{(\pi/2)^2+\mu^2}\left(-\frac{\pi}{2}\mu \sin \frac{\pi t}{2} + \left(\frac{\pi}{2}\right)^2 \cos \frac{\pi t}{2} + \mu^2 e^{-\mu t}\right)$ |
| $\sin \pi t$ | $\frac{\pi\mu}{\pi^2+\mu^2}\left(\frac{\pi}{\mu}\sin \pi t + \cos \pi t - e^{-\mu t}\right)$ |

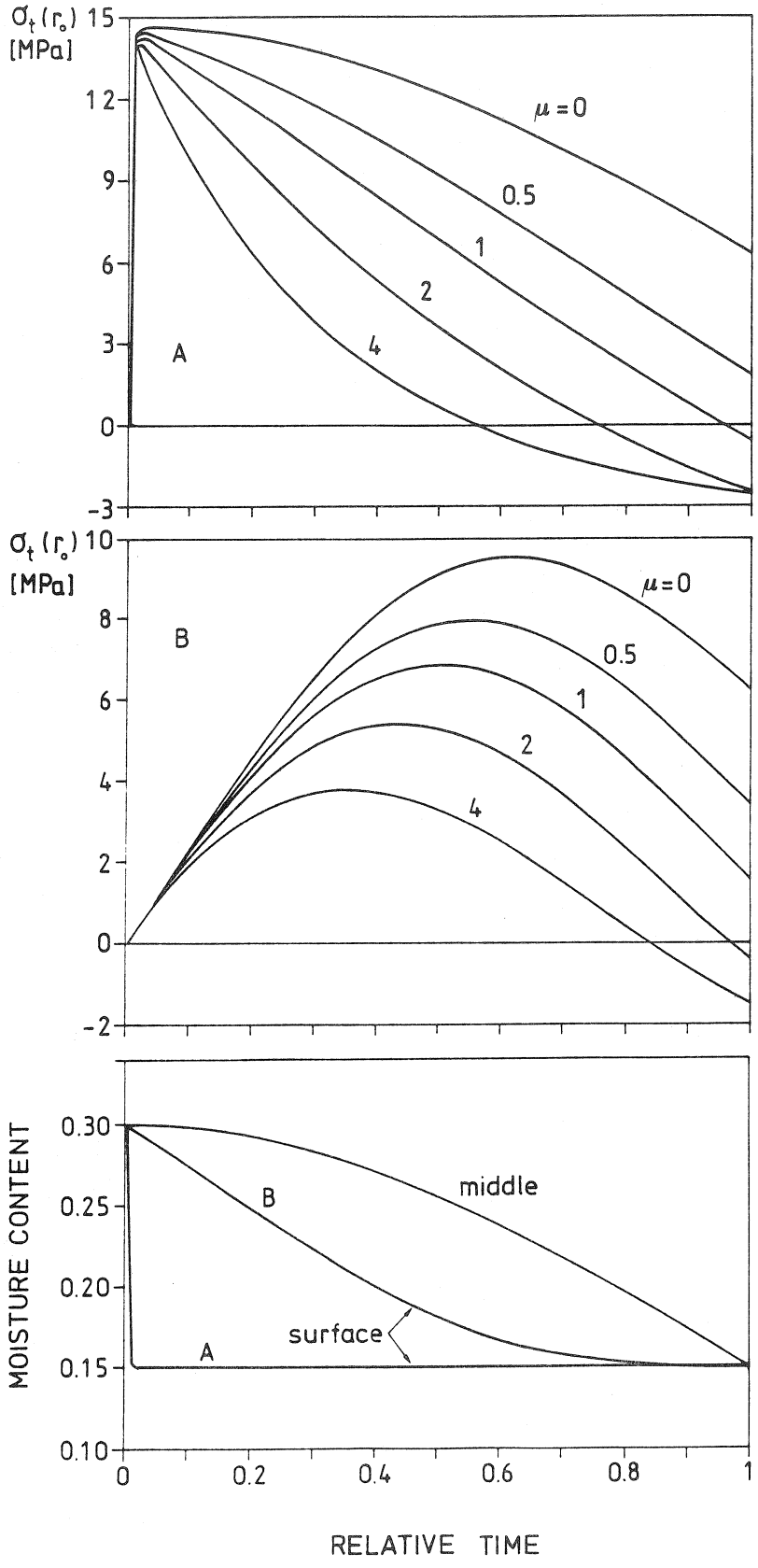


Fig. 4 Calculational tangential stresses at surface of round timber during rapid (A) and moderate (B) drying for different relaxation factors $\mu$.

GROWTH OF CHECKS AND SPLITS

High values of surface stresses indicate that checks and splits will develop. How deep they will advance, can be analyzed by the means of fracture mechanics. This study is limited to the existence of one crack and the analysis of its growth.

The stress intensity factor $K_I$, which is the parameter used in linear elastic fracture mechanics as the criterion for crack growth, can be approximately calculated as follows:

$$K_I(a) = 2\left(\frac{a}{\pi}\right)^{1/2} \int_0^a \frac{\sigma_t(x)}{\sqrt{a^2-x^2}}\, dx \qquad (14)$$

where a is the crack depth,
x is the co-ordinate beginning at the mouth of crack in the direction of crack advance and
$\sigma_t$ is the tangential stress of an uncracked specimen.

If we denote

$$Y_i(a) = 2\left(\frac{a}{\pi}\right)^{1/2} \int_0^a \frac{f_i(x)}{\sqrt{a^2-x^2}}\, dx \qquad (15)$$

the stress-intensity factor can be expressed in terms of $u_0$ and $\Delta u$ by using the same notations as in Eq. (10)

$$K_I(a) = Y_3(a)F_0(t)u_0 + Y_4(a)F_1(t)\Delta u \qquad (16)$$

In accordance with Wright /4/ the critical material value of pine is $K_{ICTR} = 290\ kNm^{-3/2}$. The crack growth in the previous example can thus be illustrated as follows. In case of rapid drying (A in Fig. 4) we obtain immediate splitting if the timber has initially sharp defects deeper than 0.2 mm. For the slower drying schedule B, the timber with radius $r_0 = 100$ mm is expected to remain uncracked, if the initial defect depth does not exceed 0.5 mm. Fig. 5 shows how $K_1$ increases with time if the relaxation factor is $\mu = 1$. One has to notice that this is a theoretical example how crack advance can be analyzed by using

fracture mechanics concept. However, more development is needed before practical results can be obtained.

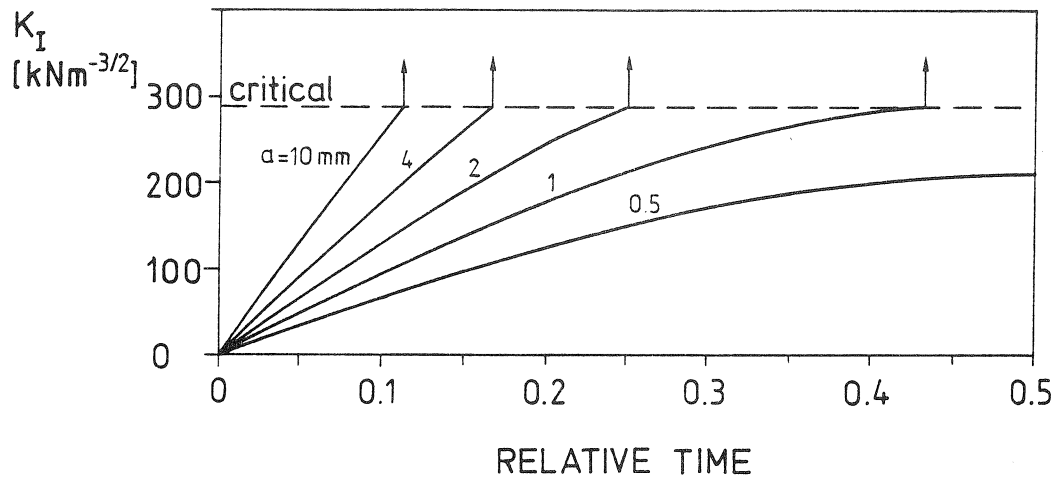


Fig. 5 Time dependence of stress intensity factor $K_I$ during drying process of round timber. Arrows indicate the time of splitting depending on various initial defect depths a. Moisture content is the same as in Fig. 4 case B and $\mu = 1$.

REFERENCES

1. Ylinen, A., Drying stresses in a cylindrical stock of wood. Scientific researches No 1, Finland Institute of Technology, Helsinki 1949.

2. Ranta-Maunus, A., Pyöreän puun kuivumisjännitysten lineaarinen analyysi (A linear analysis of drying stresses in round timber, in Finnish) Rakenteiden Mekaniikka, 19(1986)2, p. 43 - 55.

3. Boley, B., Weiner, J., Theory of thermal stresses, John Wiley & Sons, New York 1967.

4. Wright, K., Fonselius, M., Fracture toughness of wood. Mode I. CIB-W18/IUFRO-meeting, Florence, 1986.

CIB-W18/19-6-6

INTERNATIONAL COUNCIL FOR BUILDING RESEARCH STUDIES AND DOCUMENTATION

WORKING COMMISSION W18 - TIMBER STRUCTURES

# A DYNAMIC METHOD FOR DETERMINING ELASTIC PROPERTIES OF WOOD

by

R Görlacher
University of Karlsruhe
Federal Republic of Germany

MEETING NINETINE
FLORENCE
ITALY
SEPTEMBER 1986

# A Dynamic Method for Determining Elastic Properties of Wood

by

Rainer Görlacher

Lehrstuhl für Ingenieurholzbau und Baukonstruktionen
Universität Karlsruhe (TH)
W. Germany

## 1. INTRODUCTION

For the design of timber structures the modulus of elasticity is one of the most important material constants. It is used for calculating the deflection and for estimating the strength (nondestructive testing, stress grading). As the shear modulus is about 1/10 - 1/30 of the modulus of elasticity its influence on the deflection is to be taken into account (if necessary).

For determining stresses, deflections and load of the fasteners of beams composed of individual members connected to each other by nails, nail plates or similar non-rigid fasteners, the effective moment of inertia ($J_{eff}$) must be known. The moment of inertia is influenced by many factors and is difficult to determine theoretically, so that often tests are necessary.

In the field of timber research and material testing these values (modulus of elasticity, shear modulus, effective moment of inertia) are to be determined by a timesaving and reliable method.

A method that can be used for the required dimensions in wood construction is presented in the following.

## 2. PRINCIPLES OF OPERATION

A part of the energy, added to a body by a touch (stroke, hammer blow) is transformed into vibrations. First of all these vibrations are very complicated and are dependend on the way and the violence of the blow and also on the physical and geometrical properties of the body. If the body is supported, natural vibrations will be produced after a short time. Depending on the kind of supports and the direction of the excitation bending vibrations of different modes can be produced as well as longitudinal or torsional vibrations.

The Grindo-Sonic[1] instrument (fig. 1) records the vibrations over a period of time by a tracer

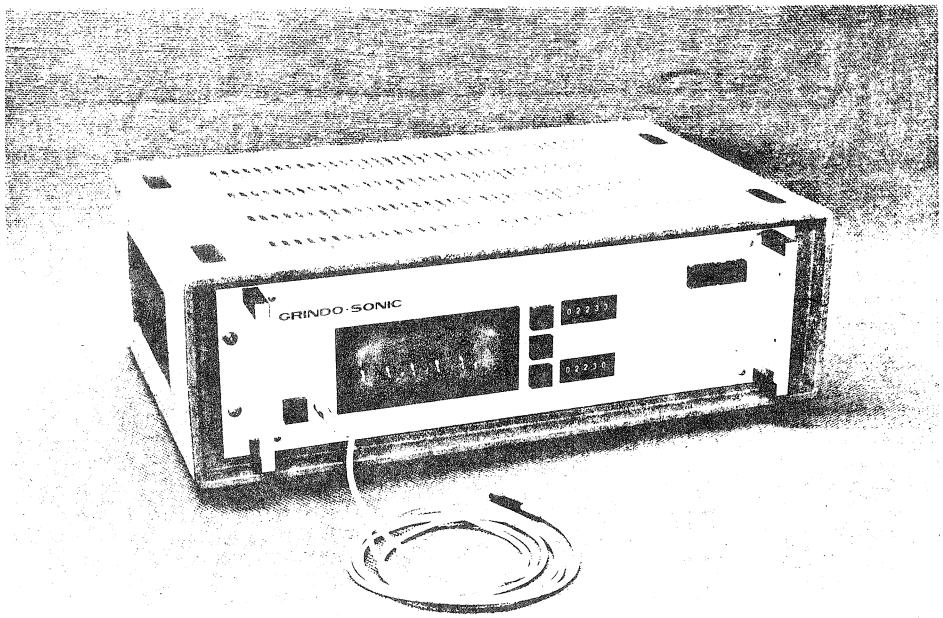


Figure 1: The Grindo-Sonic instrument

1 J.W. Lemmens Elektronika n.V., Belgium

or a microphone. After the decay time the time of vibration (μsec) of two periods is indicated on a display. Good results are obtained by supporting the vibrating body under the desired vibration nodes (fig. 2). The excitation

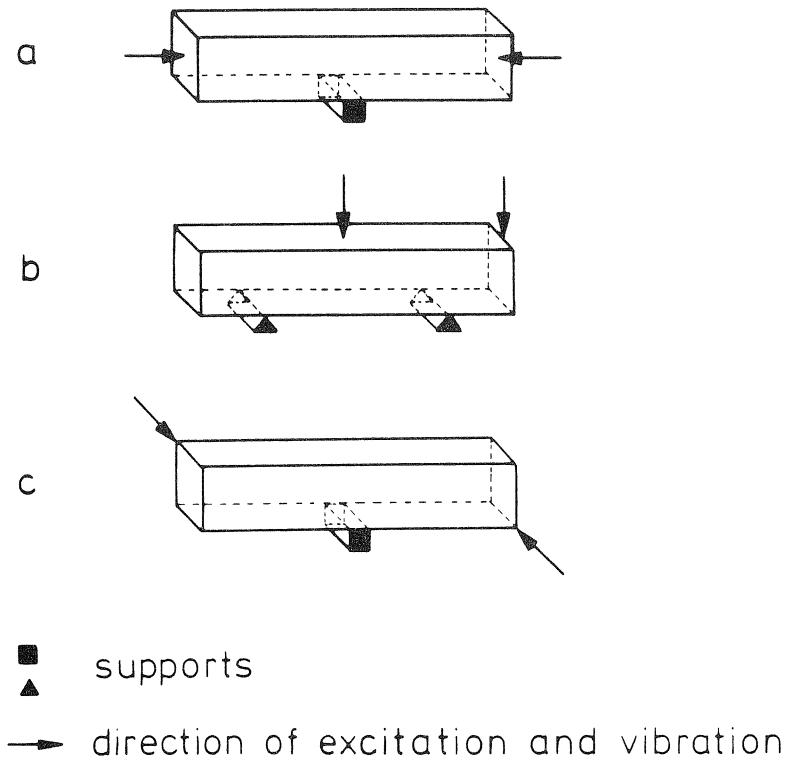


Figure 2: Supports and direction of excitation of longitudinal (a), bending (b) and torsional (c) vibrations of first mode

by a stroke has to be effected in direction of the vibration. The vibrating bar is touched with the piezo -electric tracer at the place of the maximum amplitude (fig. 3). The vibrations can also be measured without contact by a microphone.

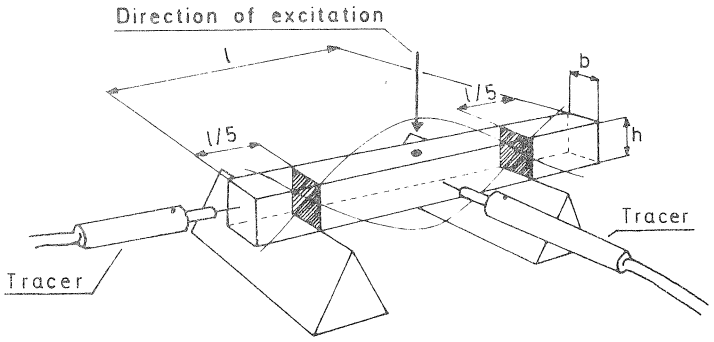


Figure 3: Test procedure for a prismatic bar with two different applications of the tracer to measure the vibration frequency

## 3. THEORY

### 3.1 Bending Vibrations

The approximate solution of the differential equation of bending vibrations is given by Goens (1931) for a rod with free ends. The modulus of elasticity can be calculated using the observed frequency from

$$E = \frac{4\pi^2 \cdot l^4 \cdot f_b^2 \cdot \rho}{m_n^4 \cdot i^2} \cdot \left[1 + \frac{i^2}{l^2}\left(K_1 + K_2 \cdot s \frac{E}{G}\right) - \frac{4\pi^2 \cdot s \cdot i^2 \cdot \rho \cdot f_b^2}{G}\right] \qquad (1)$$

where:

$E$ = modulus of elasticity, $G$ = shear modulus, $\rho$ = density, $l$ = length, $i$ = radius of gyration in direction of the bending vibration, $f_b$ = frequency.

$K_1$, $K_2$ and $m_n$ are constants only depending on the mode of the vibration. Table 1 shows the deflections of the bending vibrations of the first, second and third mode with its constants for a free-free rod in eq. (1).

$s$ is a form factor taking into account the nonuniform distribution of shear stress. For bars with rectangular cross section and isotropic material the value of $s$ is 1,2.

Hearmon (1966) obtained values of 0.96 to 1.12 with an average of 1.06 for wood. In the following the factor $s$ is taken into account in the term $s \cdot E/G$ and in the last term of eq. (1) $s$ is assumed to be 1, for the influence of this term is quite small.

## 3.2 Longitudinal Vibrations

The modulus of elasticity can be calculated from the longitudinal vibration of a sufficient long rod with free ends:

$$E = \frac{4 \cdot l^2}{n^2} \cdot f_l^2 \cdot \rho \qquad (2)$$

where

$E$ = modulus of elasticity, $l$ = length, $n$ = 1, 2, 3 ... for vibrations of the $1^{st}$, $2^{nd}$, $3^{rd}$ ... mode, $f_l$ = frequency, $\rho$ = density.

## 3.3 Torsional Vibrations

The shear modulus of isotropic rods with free ends can be calculated from the torsional vibration:

$$G = 4 \cdot l^2 \cdot f_t^2 \cdot \rho \cdot R \qquad (3)$$

where

$G$ = shear modulus, $l$ = length, $f_t$ = frequency, $\rho$ = density, $R$ = factor to take into account the form of the cross section (for example $R = 1$ for circular cross section).

Because of the anisotropy of wood the shear modulus in eq. (3) is replaced by the torsion modulus ($G_T$), which consists of two of the principal shear moduli. This however was left out of consideration, because there is no great influence on the proposed application.

The equations for calculating the modulus of elasticity and the shear modulus are only valid for the given end conditions of the rods and for constant material properties (MOE, density). With Finite-Element-Programs it is possible to estimate the influence of variable material properties or any end conditions such as partly fixed or partly supported.

## 4. TESTING AND RESULTS

In connection with several timber research projects and material testing in the Versuchsanstalt für Stahl, Holz und Steine the applications of the Grindo-Sonic instrument were tested. The reported testing series and results should only clear up the possible applications of the Grindo-Sonic for the tasks of a timber research laboratory. Further studies for determining the errors (influence of supports, variable density etc.) are in progress.

### 4.1 Modulus of Elasticity Determined by the Grindo-Sonic-Method and the Standard Method According to DIN 52 186

The bending tests according to DIN 52 186 disregard the influence of the shear modulus on the deflection. Therefore to compare both the Grindo-Sonic-method and the standard method it is necessary to ignore the factor $s.\frac{E}{G}$ in eq. (1).

The last term in eq. (1) can also be ignored if the span-to-depth ratio is greater than 1:15 according to DIN, for its influence is small. The modulus of elasticity by the Grindo-Sonic method was calculated as

$$E_{B,G} = \frac{4\pi^2 \cdot l^4 \cdot f_b^2 \cdot \varrho}{m_n^4 \cdot i^2} \left(1 + \frac{i^2}{l^2} \cdot K_1\right) \qquad (4)$$

and by the standard method as

$$E_{B,DIN} = \frac{1}{4 \cdot b} \cdot \left(\frac{l}{h}\right)^3 \cdot \frac{\Delta F}{\Delta f} \qquad (5)$$

where

$\Delta F$ = applied load

$\Delta f$ = deflection

b = thickness of the beam

The moduli of elasticity were determined by both methods for 95 clear specimens from Douglas-fir (Pseudotsuga menziesii) with sizes 4 x 4 x 72 cm and 14 beams in structural size 14 x 12 x 300 cm. The moisture content was 11-12%. In figure 4 the relationship betweeen the moduli of elasticity determined by both methods are shown. In this testing series the mean dynamic modulus of elasticity was about 9% higher than the static modulus. In bending testing the span of the beams are smaller than the length of the beams. This explains about 3% of the difference between the two methods (influence of the shear deflection). The coefficient of variation of the ratio $E_{B,G}/E_{B,DIN}$ was 3,1%.

## 4.2 Modulus of Elasticity Determined from second and third mode of vibrations

It is not possible to measure the fundamental frequency of long boards with the standard Grindo-Sonic instrument, for the time of vibration is too long. But it is possible to measure vibrations of different modes.

Supporting the boards in the nodal positions of the respective mode (Table 1) and striking the boards between two nodes it is possible to force vibrations of higher modes. It is even possible to force vibrations of different modes without the inner supports only by moving the outer supports and striking in the corresponding way. This method was tested on 100 boards (Picea abies) taken from the production of glulam timber. The size of the boards were 114 mm x 36 mm the length varied from 3,90 m to 4,50 m. After determining the sizes and the masses of each board three measurements with the Grindo-Sonic were performed. The position of the cross section (edgewise/flatwise) and the position of the supports were varied, so that vibrations of second and third mode were produced.

The tracer to measure the frequency was applicated at the end of the boards.

The calculation of the modulus of elasticity was done with eq. (1). The factor $s \cdot E/G$ was assumed to be 20 for all boards, because its influence was small.

In fig. 5 the relationship between modulus of elasticity measured from second or third mode of vibration is shown (edgewise). The average of the ratio $E_{2,e}/E_{3,e}$ was 1.01, the coefficient of variation 2.7%.

The relationship between modulus of elasticity determined from flatwise (third mode) and edgewise (average of second and third mode) Grindo-Sonic vibration tests is shown in fig. 6. The average of the ratio was 0.98, the coefficient of variation 3.7 %.

The higher deviation can be explained by the different factor s·E/G, depending on the radial or tangential direction of the annual rings.

### 4.3 Shear Modulus Determined by Torsional Vibration Tests — Influence of Shear Deformation in Bending Vibration Tests

If the modulus of elasticity is determined by bending vibration on short bars, the influence of shear deformation is considerable. Therefore it is not exact assuming a constant factor s·E/G, but it is possible to determine the shear modulus by torsional vibration. One test series was performed to assess this method.

First the frequencies of bending vibration of 25 specimens4 x 4 x 40 cm were measured (two measurements on each with different positions of the annual rings). After dividing into half once more two measurements were carried out.

The frequencies of torsional vibration of the short bars (4 x 4 x 20 cm) were also measured (supporting and striking see fig. 2).

Assuming that the modulus of elasticity of the long and short specimen must be the same, the factor s·E/G can be determined for each bar and each position of annual rings from eq. (1) and the frequencies of the bending vibration tests (the last term in eq.(1) was neglected).

The torsion modulus can be calculated from the observed frequencies and eq. (3) and assuming R = 1,18 for square cross sections. This value can slightly differ for the anisotropic wood, but for this purpose it seems to be sufficiently exact.

The results of this testing series are shown in fig. 7. The abscissa illustrates the average of the factors $s \cdot E/G$ of the two positions of annual rings, the ordinate illustrates the factor $E/G_T$ determined from torsional vibrations.

The good agreement of these values turns out that the torsion modulus $G_T$ obtained from torsional vibration can be taken approximately as a correction for the influence of shear deformation in bending vibrations.

## 4.4 Modulus of Elasticity by Bending Vibrations and Longitudinal Vibrations

The modulus of elasticity of 14 specimens 4 x 4 x 80 cm (pinus silvestris) was determined by bending vibrations of first mode and eq. (1) with $s \cdot E/G = 20$ and ignoring the last term. The same specimens were tested by longitudinal vibrations and the modulus of elasticity was calculated from eq. (2). The agreement was good (average 1.02 coefficient of variation 4.1%) and is shown in fig. 8.

## 4.5 Effective Bending Stiffness of beams composed of individual members

The effective bending stiffness of beams composed of individual members can also be determined by vibration testing. This was proved by 21 wood trusses connected with metal webs (fig. 9)

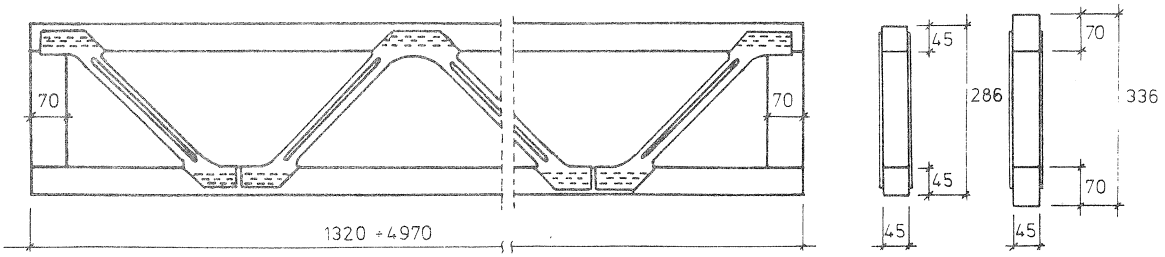


Fig. 9: Wood trusses with metal webs for the tests

First the frequencies of bending vibrations of first mode were measured by the Grindo-Sonic. The calculation of the effective bending stiffness was performed by eq. (6)

$$(EI)_{eff} = \frac{4\pi^2 \cdot l^4 \cdot f_b^2}{m_n^4} \cdot \frac{M}{l} \qquad (6)$$

where
$(E \cdot I)_{eff}$ = effective bending stiffness, $l$ = length, $f_b$ = frequency, $M$ = mass of the beam, $m_n$ = constant in accordance with table 1.
Eq. (6) was obtained from eq. (1) by transformation and ignoring the whole correction term in brackets. This simplification has to be done, because the correction term is not yet known for these beams.

By bending tests (loads in the truss joints of the upper flange) the mid-span deflection was determined and the effective bending stiffness was calculated.

The relationship between the effective bending stiffness by both the Grindo-Sonic method and the static method is shown in fig. 10.
Although eq. (6) is simplified the correlation is good. Modifying eq. (6) the results would improve.

## 5. CONCLUSIONS

The Grindo-Sonic has proved to be a reliable instrument for the determination of the modulus of elasticity of beams of different sizes. Measuring the frequencies of torsional vibrations it is possible to obtain the torsion modulus, which can directly be used for considering the influence of shear deformations on short beams. Longitudinal vibrations can also be used for determining the modulus of elasticity without the influence of shear. The Grindo-Sonic is also suitable for determining the effective bending stiffness of composite beams. In this case the calculation has to be modified.

Further studies are of course necessary, especially for finding out the influence of all effects on the frequencies and the calculated elastic constants.

References:


|1| Goens, E., 1931: Determination of Young's Modulus from Flexural Vibrations. Ann. Phys. 11: 649 - 78.

|2| Görlacher, R., 1984: Ein neues Meßverfahren zur Bestimmung des Elastizitätsmoduls von Holz. Holz als Roh- und Werkstoff 42 (1984): 219 - 222.

|3| Hearmon, R.F.S., 1966: Vibration Testing of Wood. Forest Products Journal 16: 29 - 39.

|4| Institut Belge de Normalisation (1976): Essais non destructifs; mesure de la frequence de resonance. NBN, B 15 230.

Table 1: Deformations of bending vibrations and its constants mm, $K_1$ und $K_2$

| mode | Nodal positions ($x_i$) for a free-free rod in bending vibrations | constants in eq. (1) | | |
|---|---|---|---|---|
| | | $m_n^4$ | $K_1$ | $K_2$ |
| n=1 | 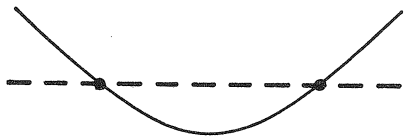 $x_1 = 0{,}224\ l$ $x_2 = 0{,}776\ l$ | $0{,}5006 \cdot 10^3$ | 49,48 | 12,30 |
| n=2 |  $x_1 = 0{,}132\ l$ $x_2 = 0{,}500\ l$ $x_3 = 0{,}868\ l$ | $3{,}804 \cdot 10^3$ | 108,9 | 46,05 |
| n=3 | 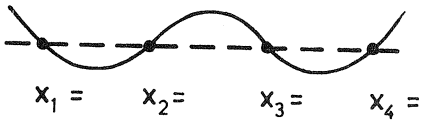 $x_1 = 0{,}094\ l$ $x_2 = 0{,}356\ l$ $x_3 = 0{,}644\ l$ $x_4 = 0{,}906\ l$ | $14{,}62 \cdot 10^3$ | 186,9 | 98,90 |

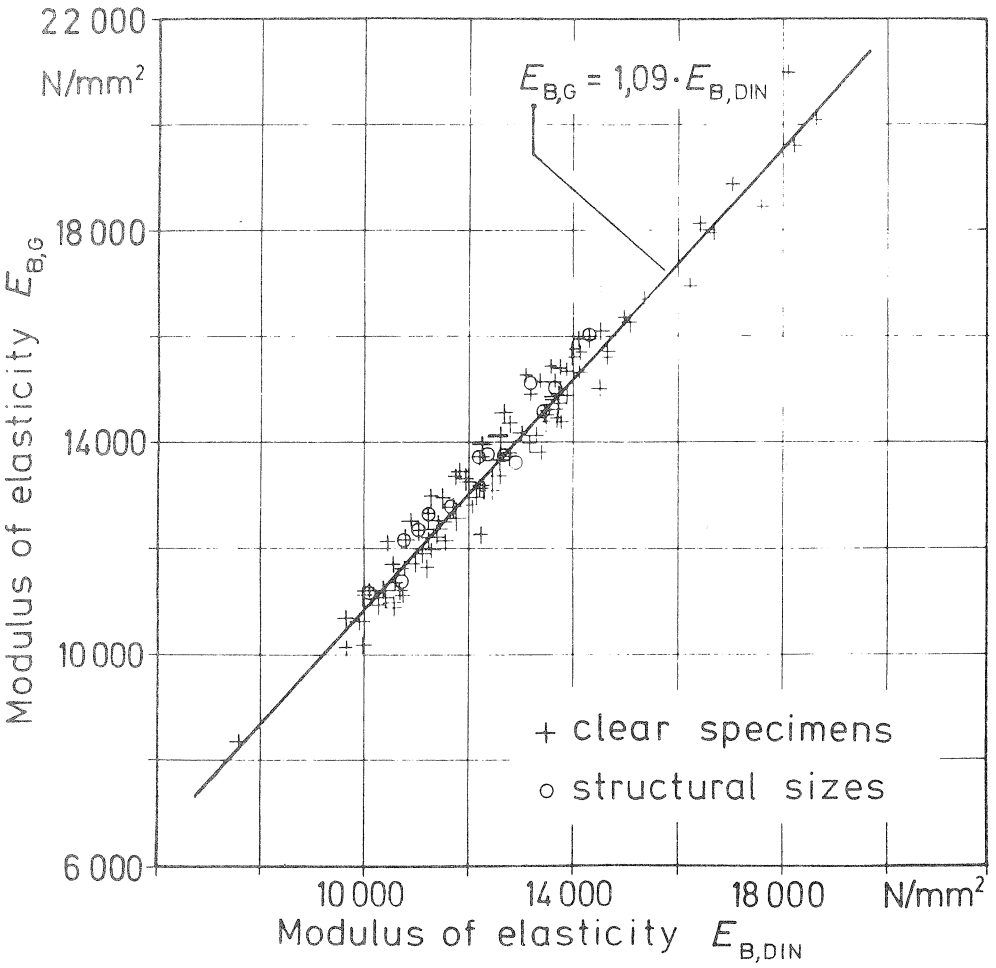


Figure 4: Relationship between modulus of elasticity determined by both the Grindo-SONIC-method and the standard method according to DIN 52 186

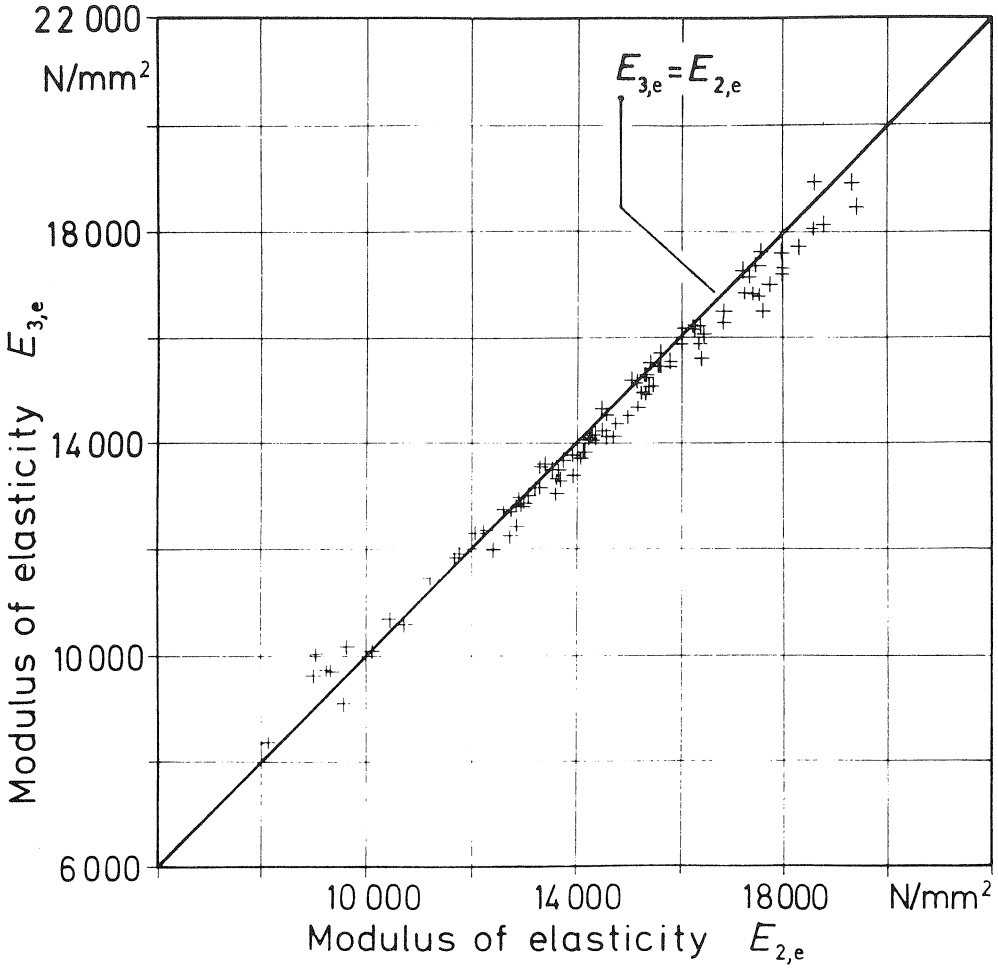


Figure 5: Relationship between modulus of elasticity measured from second and third mode of bending vibration

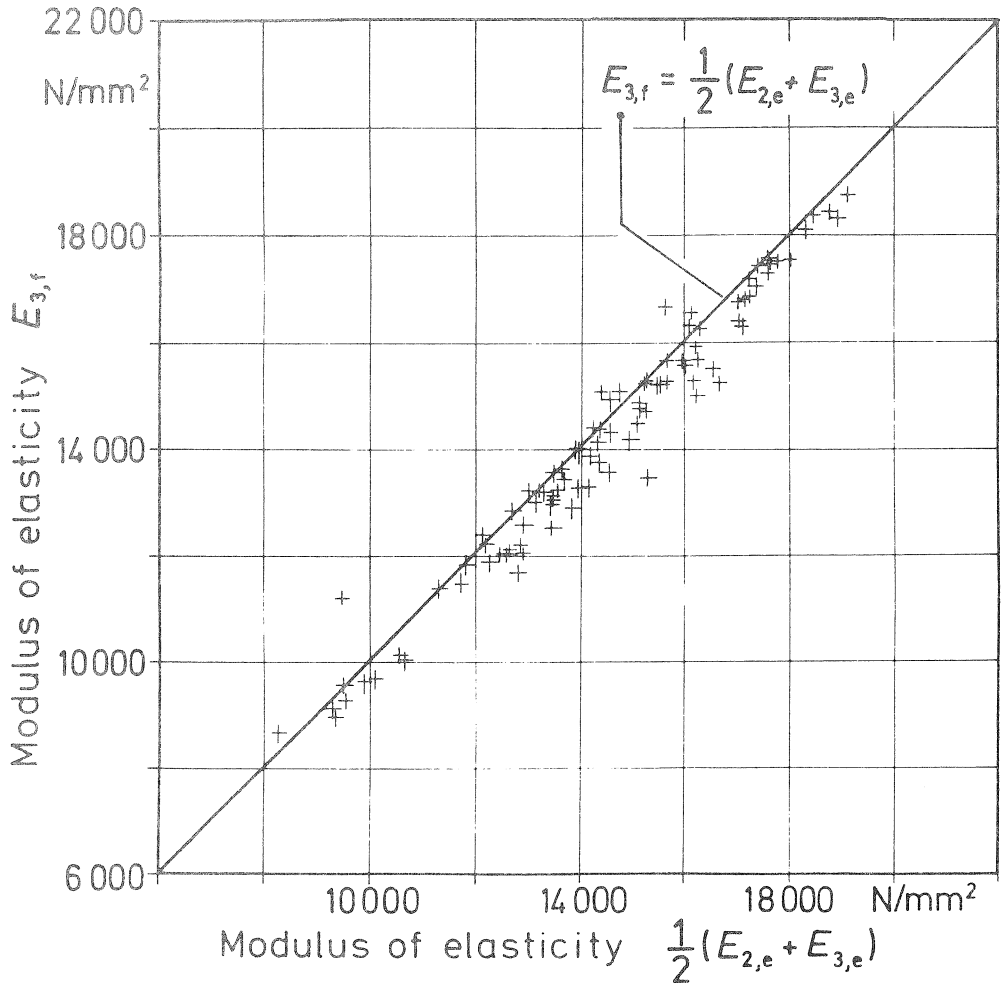


Figure 6: Relationship between modulus of elasticity determined from flatwise ($E_{3,f}$) and edgewise ($\frac{1}{2}$ ($E_{2,e}$ + $E_{3,e}$)) vibration tests

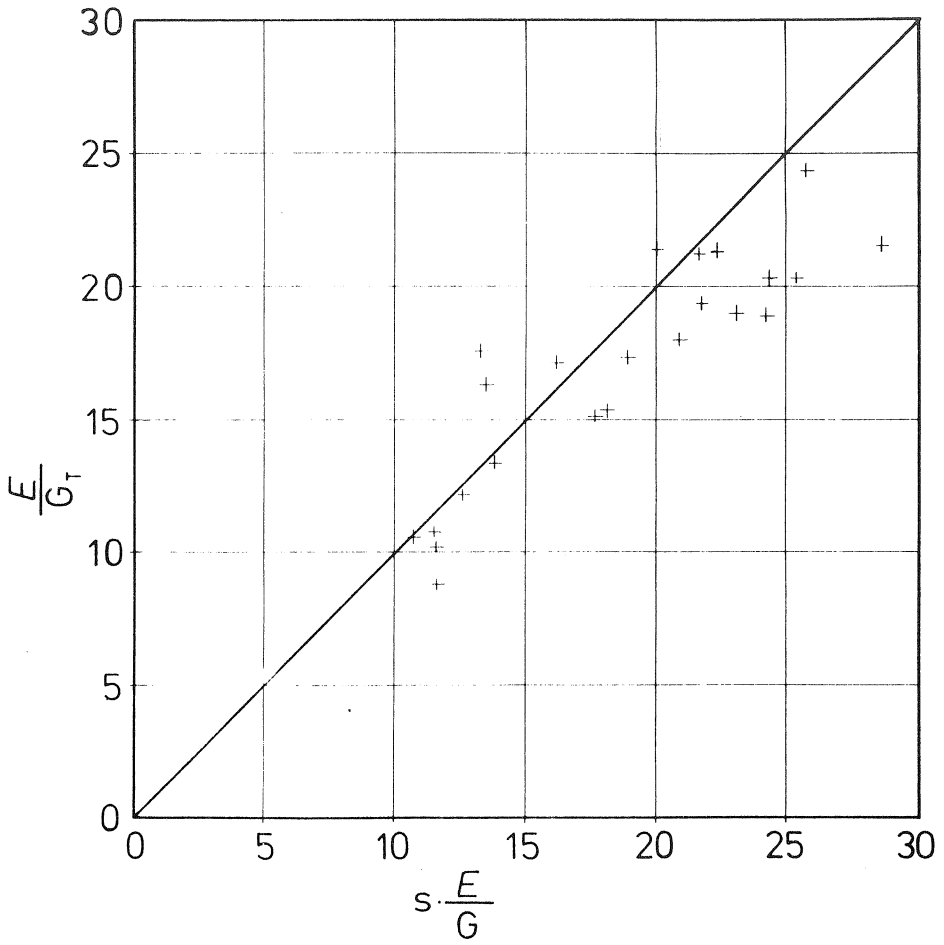


Figure 7: Relationship between $s \cdot \frac{E}{G}$ determined from bending vibration tests und $E/G_T$ determined from torsional vibration tests

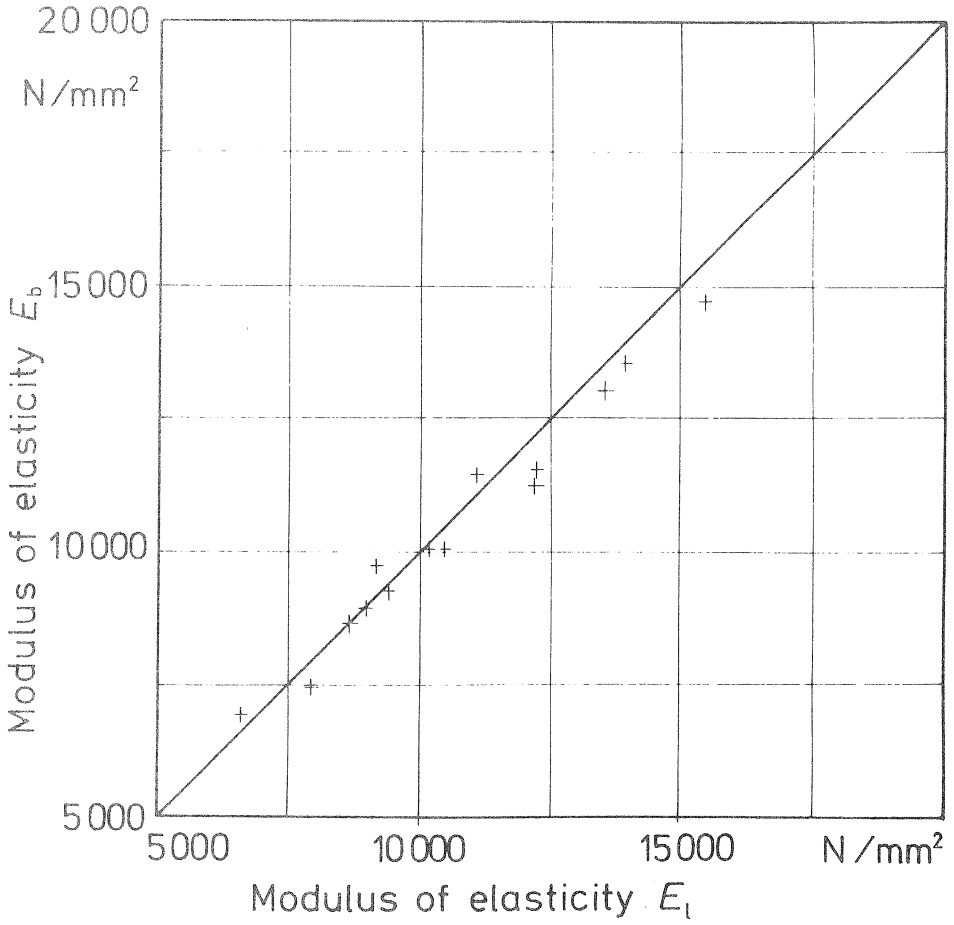


Figure 8: Relationship between modulus of elasticity determined from longitudinal vibration test ($E_\ell$) and bending vibration tests ($E_b$)

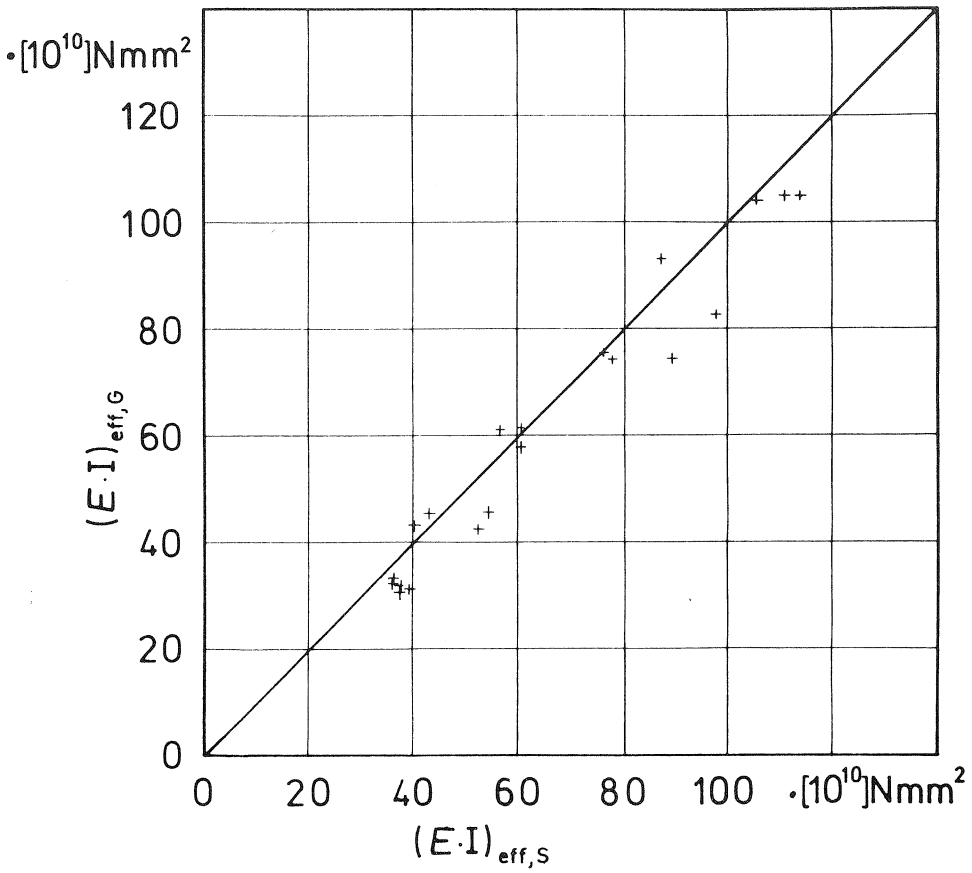


Figure 10: Relationship between the effective bending stiffness determined by both the Grindo-Sonic method ($(E \cdot I)_{eff,G}$) and the static method ($(E \cdot I)_{eff,s}$)

CIB-W18/19-7-1

INTERNATIONAL COUNCIL FOR BUILDING RESEARCH STUDIES AND DOCUMENTATION

WORKING COMMISSION W18 - TIMBER STRUCTURES

# BEHAVIOUR OF NAILED AND BOLTED JOINTS UNDER SHORT-TERM LATERAL LOAD
## - CONCLUSIONS FROM SOME RECENT RESEARCH -

by

L R J Whale
Timber Research and Development Association
United Kingdom
I Smith
University of New Brunswick
Canada
B O Hilson
Brighton Polytechnic
United Kingdom

MEETING NINETEEN
FLORENCE
ITALY
SEPTEMBER 1986

## INTRODUCTION

It is likely that in the future it will be common practice for timber structures to be designed using partial coefficients limit states design codes. The intended Commission of the European Communities code, Eurocode 5, which is already in draft form, follows this approach (1).

One necessity of such codes is a knowledge of characteristic load-deformation and strength properties for various types of mechanical joint. Another concerns the need to evaluate the implications of using approximate data, and as a result, consider the precision necessary in determining certain key information.

Having decided at the outset that current such information was limited, TRADA undertook two research contracts during the period 1983-85 which would address these requirements and provide the data-base necessary on nailed and bolted joint properties. A detailed account of the work cannot be given in this paper, however a brief discussion of the research methodologies used is provided, along with the main results and conclusions which have emerged.

## RESEARCH PHILOSOPHY AND METHODS

The research was divided into three main areas :-

i) requirements for probabilistic design of mechanical timber joints.

ii) application of predictive methods for short-term mechanical properties of nailed and bolted joints.

iii) review of existing knowledge on long-term stiffness and strength losses in mechanical joints and production of a strategy for future work in this area.

Work within the first of these areas was larger computer based; testing was restricted purely to that necessary to confirm the validity of the computer programs. Numerical reliability studies were used as a "benchmark" to assess the implications of choosing simpler code calibration methods for partial coefficients codes. Numerical sensitivity studies were used to explore the question of the precision to which characteristic joint properties need be estimated for design.

Reliability studies were based upon numerical simulations of the behaviour of bolted splice joints in the tie members of roof trusses. Partial design coefficients were calibrated assuming ultimate limit states, using Gerhards' damage accumulation model (2) to describe strength loss under typical load histories. Particular emphasis was placed upon calibration of the materials factor and the duration of load factor.

Sensitivity studies were conducted on nailed diaphragm walls and floors sheathed with plywood using finite element analysis programs developed by Foschi (3,4). These formed the basis of a study of the influence that variations in the load deformation characteristics of joints have in determining the overall performance of complete structural elements.

Emphasis within the area of predictive methods was placed upon the establishment of a comprehensive data-base of materials properties relevant to the design of laterally loaded nailed and bolted joints. This consisted of embedment test data for various joint member materials including some board materials, and connector yield properties established via bending or tensile testing. Information of this sort is a requirement of both the explicit "yield theory" equations developed by Johansson (5) to predict joint strength, and of beam-on-foundation finite element models such as that developed by Smith (6), which predict complete load-slip properties for joints. In total the embedment test programme extended to some 3200 tests, and the connector test programme to over 1500 tests. Testing of complete joints was confined to that necessary to verify the predictive ability of the analytical joint model (6). Details of these test programmes are provided in the appendix.

Solid wood specimens were sampled on the basis of density according to a method described by Smith and Whale (7), and dimensioned according to the minimum requirements of BS5268 : Part 2 (8). Toleranced holes were provided for bolts, but nail lead holes were used only in the case of the hardwood specimens. Specimens were preconditioned at 20°C/65%r.h. and subjected to nine pre-loading cycles before being loaded to failure. All relevant stiffness and strength properties were recorded. Test durations were typically of the order of 15 minutes.

The third area of study within the work programme concerned the extent of existing knowledge on longer-term properties of mechanical timber joints. Apart from a detailed review of literature (Smith (9)), a pilot study was also initiated involving a total of 48 bolted timber joints loaded for up to 35 days in tension parallel to the grain. This provided preparatory data for a preliminary appraisal of currently available rheological models.

## RESULTS AND CONCLUSIONS

### Requirements for probabilistic design

Based upon a comprehensive programme of reliability studies fully reported by Smith (10) the primary factors which affect calibrated values of the materials factor $\gamma_m$ have become evident. Figure 1 illustrates how $\gamma_m$ values are strongly influenced by the assumed loading mix [characterised by the ratio $F_s(0.95)/F_d(0.95)$] and that although simpler second moment estimates of the materials factor are unable to describe this dependency, a subjectively assigned relationship based upon the available values can be constructed and is likely to be conservative.

Although in Figure 1 the damage model constants were assumed to apply to all replicates in the numerical simulation, much speculation currently concerns the consistency of the d.o.l. effect across material of various strengths. Figure 2 explores the implications of various possibilities currently under debate, and illustrates the importance of this point when calibrating $\gamma_m$ values.

A further point requiring clarification was the effect upon calibrated $\gamma_m$ values resulting from both the method of estimating characteristic resistances, fk, and the degree of statistical variation which is inevitably associated with them. Upon consideration of the first question it would seem that point estimates of fk are superior, since those which have an associated confidence level lead to unnecessary inconsistency in estimates of $\gamma_m$. Typical magnitudes of statistical variations in $\gamma_m$ which result from statistical variation in estimates of fk are illustrated in Figure 3. Based upon such examples the minimum number of test replications necessary to establish fk can be estimated, given the amount of variability to be expected in the results.

Results from the sensitivity analyses are fully documented by Chui (11) and Devonport and Whale (12). These showed that the performance of both sheathed walls and floors are sensitive to accurate specification of the initial stiffness characteristics of joints. A $\pm 20\%$ precision on slip moduli is therefore considered necessary if the design process is not to be unduly corrupted; this includes any errors introduced by modification factors which convert short-term laboratory values to long-term in-service values.

Based upon work summarised in the foregoing, the following conclusions have emerged :-

1) Any method of calibrating partial coefficients design codes for structural timberwork needs to take accurate account of "duration of load" effects in timber. The minimum sensible option for calibration of such codes is thought to be use of simple second moment estimates of $\gamma_m$, with the true loading mix dependency of this factor being aggregated into modification factors for duration of loading, Kt.

2) Depending upon the magnitude of variability to be expected, a minimum of between 20 and 100 test replications is necessary to establish characteristic properties of joints. Larger numbers of replicates are required for structural timber properties.

3) Mechanically fastened components such as racking walls and sheathed floors are sensitive to specification of initial stiffness properties; slip moduli should be specified to $\pm 20\%$. To achieve this a reliable modification factor for time-in-service need be applied.

4) Following from conclusions 1 and 3, future research should concentrate upon development of a better understanding of duration of load effects on both strength and stiffness, as a function of loading and environmental histories.

Application of predictive methods

Owing to the large amount of embedment data gathered, only typical trends can be presented here. Results from the complete test programme are fully documented in annexes to the final reports produced for both projects (13, 14).

All embedment properties collected were found to exhibit excellent straight line relationships with timber density, which therefore acted as a predicting parameter of embedment properties for timber species other than those tested. It had originally been intended to utilize the results from plywood tests in two directions, to derive the contribution donated separately from parallel and perpendicular veneers. Solution of the appropriate simultaneous equations, however, resulted in negligible differences between parallel and perpendicular veneer properties. This is thought to be due to the relatively small nail diameters involved, and conforms with similar observations from solid timbers (Smith and Whale (15)). Plywood properties were therefore presented as aggregated values across the complete layered structure, and could be compared directly with equivalent solid timber data, as in Figure 4. Based upon several such comparisons it seems that the enhanced nail embedment properties of plywoods are accurately predicted by simply projecting their inherently higher dry density values onto the extrapolative trends derived from solid timber specimens. Tempered hardboard properties bore no such relation to the solid timber density trends however (Figure 4). Moreover, extrapolation of their properties on the basis of thickness proved invalid, with thicker boards being stronger and stiffer.

Relationships of the kind illustrated in Figure 4 enabled rapid comparisons of differences between compressive and tensile embedment properties as well as indicating connector diameter trends. These are summarised in Table 1 below :-

Table 1 – Summary of embedding strength/density relationships

| | Diameter (mm) | Mean maximum embedding strength SH (N/mm²) | | |
|---|---|---|---|---|
| | | Tension parallel to grain | Compression parallel to grain | Compression perpendicular to grain |
| Nails | 2·65 | 0·064ϱ | — | 0·079ϱ |
| | 3·35 | 0·066ϱ (0·097ϱ) | 0·070ϱ (0·095ϱ) | 0·073ϱ (0·088ϱ) |
| | 4·00 | 0·063ϱ | — | 0·065ϱ |
| | 5·00 | 0·059ϱ | — | 0·063ϱ |
| | 6·00 | 0·055ϱ (0·089ϱ) | 0·052ϱ (0·082ϱ) | 0·055ϱ (0·068ϱ) |
| Bolts | M8 | 0·084ϱ | — | 0·040ϱ |
| | M12 | 0·082ϱ (0·085ϱ) | 0·079ϱ (0·078ϱ) | 0·034ϱ (0·038ϱ) |
| | M16 | 0·073ϱ | — | 0·030ϱ |
| | M20 | 0·075ϱ (0·076ϱ) | 0·072ϱ (0·074ϱ) | 0·027ϱ (0·031ϱ) |

ϱ = mean dry density (oven dry weight/volume at test) kg/m³

Values in parenthesis apply to hardwoods

Based upon these results, the following equations were derived to describe variations in the embedment properties of nailed and bolted specimens :-

Nails

$$SH,d = 0{\cdot}055\varrho\left(\frac{d}{6}\right)^{-0{\cdot}4} \quad \text{..... Softwoods}$$

$$SH,d = 0{\cdot}079\varrho\left(\frac{d}{6}\right)^{-0{\cdot}3} \quad \text{..... Hardwoods}$$

Bolts

$$SH,d = \frac{(0{\cdot}1 - 0{\cdot}0016d)}{2{\cdot}5\sin^2\theta + \cos^2\theta}\varrho \quad \text{..... Softwoods}$$

$$SH,d = \frac{0{\cdot}1 - 0{\cdot}0016d}{2{\cdot}2\sin^2\theta + \cos^2\theta}\varrho \quad \text{..... Hardwoods}$$

Although the properties of softwood and hardwood specimens are represented separately in the above, this does not necessarily imply that such distinctions are necessary in codes of practice (Whale and Smith (16)).

In addition to establishing density trends in maximum embedment strengths such as that shown in Figure 4, similar trends were also developed for the loads which caused particular values of displacement; namely 0.05mm, 0.10mm, 0.20mm, 0.40mm, 1.00mm, 1.25mm, 1.50mm, 1.75mm and 2.00mm. These provided a complete family of regression lines such as those shown in Figure 5, which could be used to predict loads corresponding to particular displacements (and hence construct complete load-displacement characteristics) for timbers of any given density. Based upon similar such trends, Figure 6a compares the mean experimental response of one of the mixed species plywoods incorporated in the validatory test programme (Table A6), with the predicted characteristic based upon the plywoods mean dry density.

Since cleavage action can sometimes cause failure in timber specimens below 2.00mm displacement, the superposition of maximum embedment strengths (such as those in Table 1) upon predicted characteristics such as that in Figure 6a, can sometimes cause a cut-off to occur. This is particularly relevant to the higher density solid timber species; an illustration of which is provided in Figure 6b.

Results from three point bending tests on wire nails are documented by Smith and Whale (17, 18). Based upon statistical analyses within-batch variations in nail properties were shown to be small compared with between-batch variations. Furthermore a minimum permitted yield stress of $50(16-d(nom))$ N/mm$^2$ and elastic modulus of $160 \times 10^3$ N/mm$^2$ is recommended for specification in design codes for structural timberwork [d(nom) signifies nominal nail diameter]. Results from tensile tests on ISO metric hexagon head block bolts are summarised in Table 2. These results illustrate the differences between properties of cold formed and hot forged bolts.

Although the main objective was to establish a comprehensive data-base of materials data, provision was made for limited joint tests to verify the predictive ability of the analytical model (see Table A7). Typical comparisons are provided in Figures 7 and 8. As previously found by Smith for joints with plain circular steel dowels (6) it is possible to establish initial joint stiffness to ±20% and ultimate joint loads to ±10% using two-dimensional beam-on-foundation models.

Based upon work summarised in the foregoing, the following main conclusions are drawn :-

1. Embedment tests are sensitive to the detailing of test apparatus. Standardized equipment and test methods should be adopted.

2. A sampling strategy based upon matching of density distributions should be adopted for solid wood embedment and joint specimens.

3. Timber density is a sound basis on which embedment properties may be extrapolated to timber species or plywoods other than those tested. There exists a strong possibility that the same underlying relationship may be used for extrapolation of both solid timber and plywood properties.

4. Tempered hardboard embedment properties are grossly over-estimated by density trends applicable to solid timber. Extrapolation of tempered hardboard properties on the basis of thickness is not valid; thicker boards are stronger and stiffer per unit thickness.

5. Tension and compression embedment specimens exhibit different embedment characteristics due to differences in stress distributions in the region of the connector. This does not necessarily imply that distinctions need be made in codes of practice.

6. Differences also exist in embedment properties for loading parallel and perpendicular to the grain/face grain. For nailed solid timber and plywood specimens these are relatively small.

7. Minimum nail yield stresses should be specified in timber design codes. A suitable form is $f_y = 50\ (16-d(nom))\ N/mm^2$. A minimum elastic modulus for nails of $160 \times 10^3\ N/mm^2$ should also be specified to preclude use of exceptionally low grade steel in their manufacture.

8. Cold formed and hot forged black bolts possess different strength properties, and the possible use of either type should be recognised when assigning design strengths for laterally loaded bolted joints.

9. Validatory joint tests have upheld conclusions from previous research that two-dimensional beam-on-foundation models are able to predict joint stiffness to ±20% and ultimate capacity to ±10%.

Influence of longer-term loadings

Apart from conducting a detailed review of existing literature, a pilot study was also conducted on bolted joint specimens. Rheological analyses of the results indicated that at load levels between 25% and 40% of short-term ultimate strength, stress level related nonlinearity occured in time dependent responses. Traditional linear viscoelastic models were therefore found inappropriate (Figure 9). In view of this, requirements for a potentially suitable model are reviewed by Whale (19).

The following conclusions were drawn :-

1. A consistent set of definitions need to be adopted for all future work on longer-term loading of joints, particularly concerning the definition of "instantaneous" or elastic deformations.

2. Existing models for predicting losses of strength and cumulative deformations in joints need to be further validated and amended where appropriate. This is considered a major priority for future work in this area.

On the basis of conclusions drawn from this phase of the research, a theoretical and experimental investigation of creep behaviour in nailed joints is now underway at TRADA.

ACKNOWLEDGEMENTS

The authors gratefully acknowledge the valuable advice and assistance of Dr. C. Anderson (Polytechnic of the South Bank) during the experimental stages of this research.

REFERENCES

1. LARSEN, H.J. et al. Draft Eurocode 5 : Common unified rules for timber structures. Unpublished report to the Commission of the European Communities by Consultative Group, Copenhagon, October 1985.

2. GERHARDS, C.C. Time related effects of loads on strength of wood. Proceedings of Conference on Environmental Degradation of Engineering Materials, Virginia Polytechnic Institute and State University, October 1977.

3. FOSCHI, R.O. Analysis of wood diaphragms and trusses, Part 1 : Diaphragms. Canadian J of Civil Engineering, Vol 4, No 3, pp 345-352, 1977.

4. FOSCHI, R.O. Structural analysis of wood floor systems. Journal of the Structural Division, Proceedings of ASCE, Vol 108, No ST7, July 1982.

5. JOHANSSON, K.W. Theory of timber connections. Publ 9, Bern : International Association of Bridge and Structural Engineering, 1949.

6. SMITH, I. Short-term load deformation relationships for timber joints with load type connectors. Ph.D. Thesis, CNAA, 1983.

7. SMITH, I. and WHALE, L.R.J. Sampling of wood for joint tests on the basis of density. Paper 17-17-1, presented at CIB-W18 meeting, Rapperswil, , Switzerland, May 1984.

8. BRITISH STANDARDS INSTITUTION. Code of practice for the structural use of timber : Part 2. Code of practice for permissible stress design, materials and workmanship. British Standard BS5268 : Part 2 London, BSI, 1984.

9. SMITH, I. Influence of longer-term loadings on mechanical timber joints : State-of-the-art and objectives for future research. TRADA Research Report 4/83. TRADA, Hughenden Valley, Bucks, July 1983.

10. SMITH, I. Methods for calibrating design factors in partial coefficients limit states design codes for structural timberwork : with special reference to mechanical timber joints. TRADA Research Report 1/85. TRADA, Hughenden Valley, Bucks, January 1985.

11. CHUY, Y.H. Sensitivity studies on the influence of joist to sheathing joint characteristics on the behaviour of light-weight timber floors. TRADA Research Report 2/85. TRADA, Hughenden Valley, Bucks, January 1985.

12. DEVONPORT, I. and WHALE, L.R.J. Sensitivity studies on the influence of joint characteristics on load deformation relationships in timber shear walls. Paper presented to IUFRO Timber Engineering Group, Xalapa, Mexico, December 1984.

13. WHALE, L.R.J. and SMITH, I. Final report to DoE (April 1983 - September 1985) - Mechanical timber joints : Annex : Embedment test results, November 1985.

14. WHALE, L.R.J. and SMITH, I. Final report to CEC (February 1983 - December 1985) - Mechanical joints in structural timberwork - information for probabilistic design : Annex : Embedment test results December 1985.

15. SMITH, I. and WHALE, L.R.J. The influence of the orientation of mechanical joints on their mechanical properties. Paper presented to CIB-W18 meeting, Haifon, Israel, June 1985.

16. WHALE, L.R.J. and SMITH, I. The derivation of design clauses for nailed and bolted joints in Eurocode 5. Paper 19-7-6 Joint CIB-W18/ IUFRO Timber Engineering Group Meeting, Florence, Italy, September 1986.

17. SMITH, I. and WHALE, L.R.J. Mechanical properties of nails and their influence on mechanical properties of nailed timber joints subjected to lateral load. Part 1. Background and tests on nails of UK origin. TRADA Research Report 4/85. TRADA, Hughenden Valley, Bucks, January 1985.

18. SMITH, I. and WHALE, L.R.J. Mechanical properties of nails and their influence on mechanical properties of nailed timber joints subjected to lateral load. Part 2. Tests on nails of mainland Europe origin, comparisons of results with those of nails of UK origin and conclusions. TRADA Research Report 9/85. TRADA, Hughenden Valley, Bucks, July 1985.

19. WHALE, L.R.J. A preliminary assessment of integral operator methods for characterising the rheological behaviour of timber joints. Paper presented to IUFRO Timber Engineering Group, Xalapa, Mexico, December 1984.

Figure 1

## Relationship between $\gamma_m$ and ratio of characteristic snow force to characteristic dead force

Target probability of failure = F (60 years)* = 0·1%

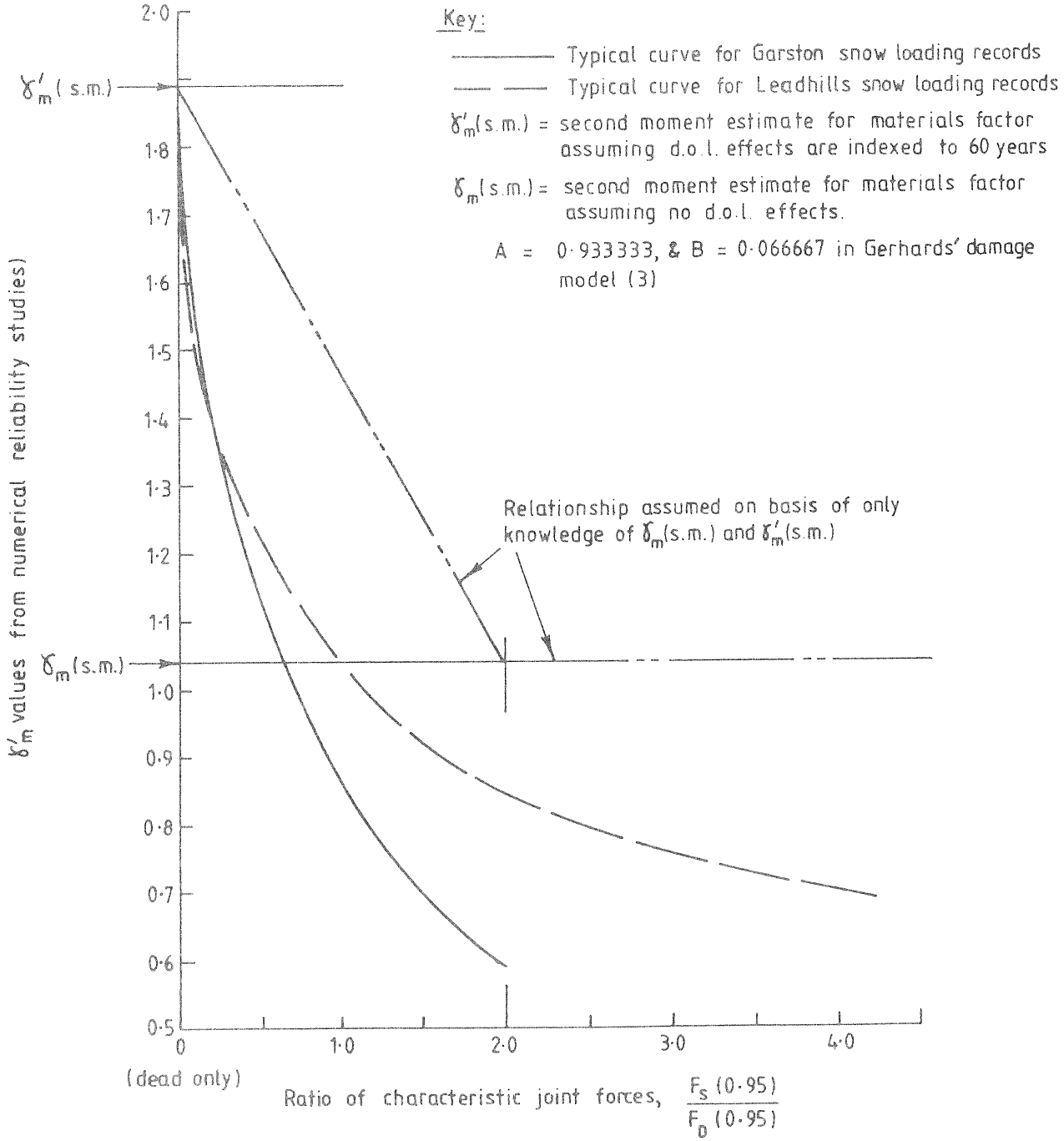

Figure 2



# Influence of damage model constant assumptions upon results from reliability studies.

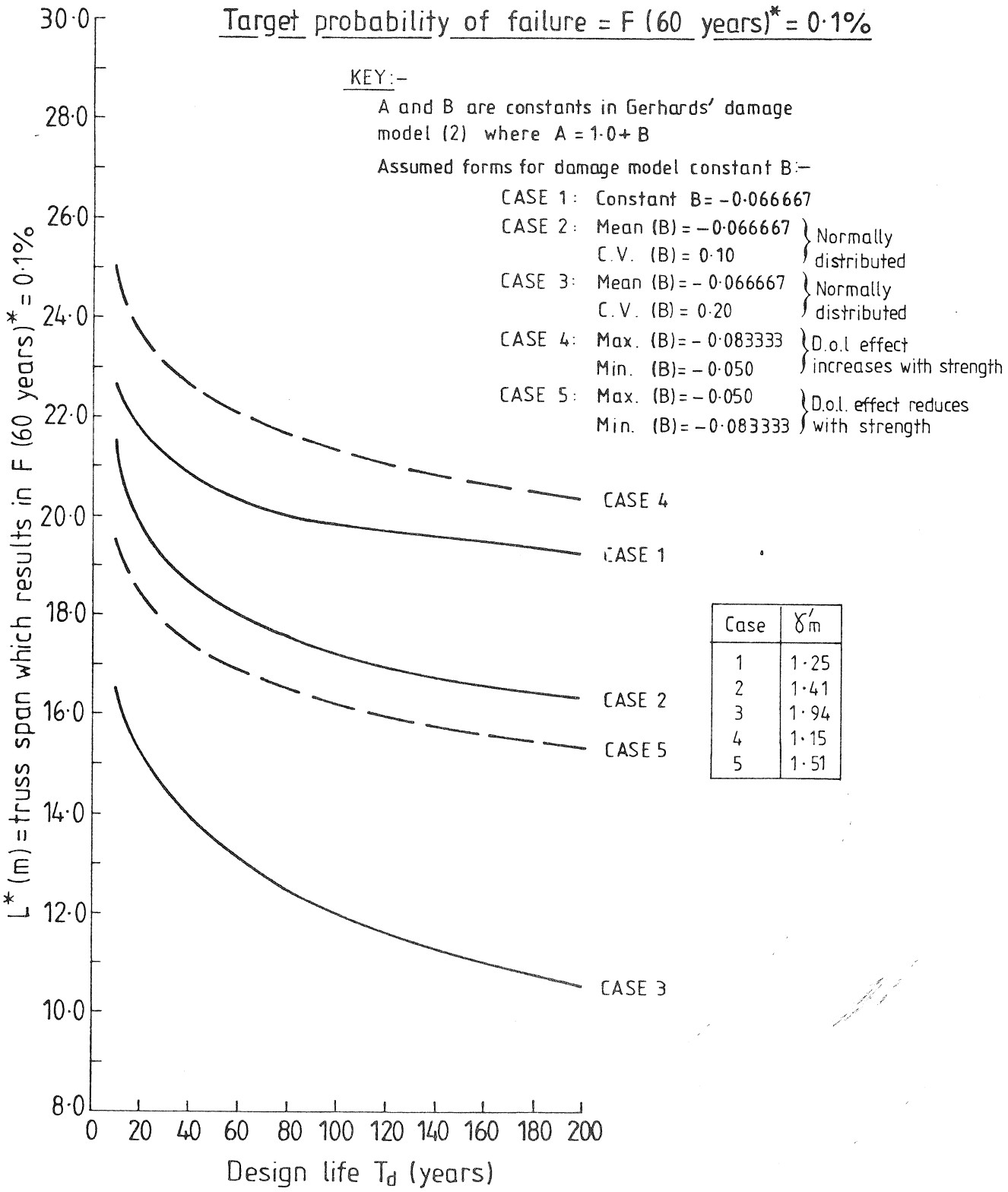

Figure 3

## Typical variations in $\gamma_m$, which result from variations in estimates of $f_k$

Note: n = number of randomly sampled replicates used to establish individual point estimates for $f_k$

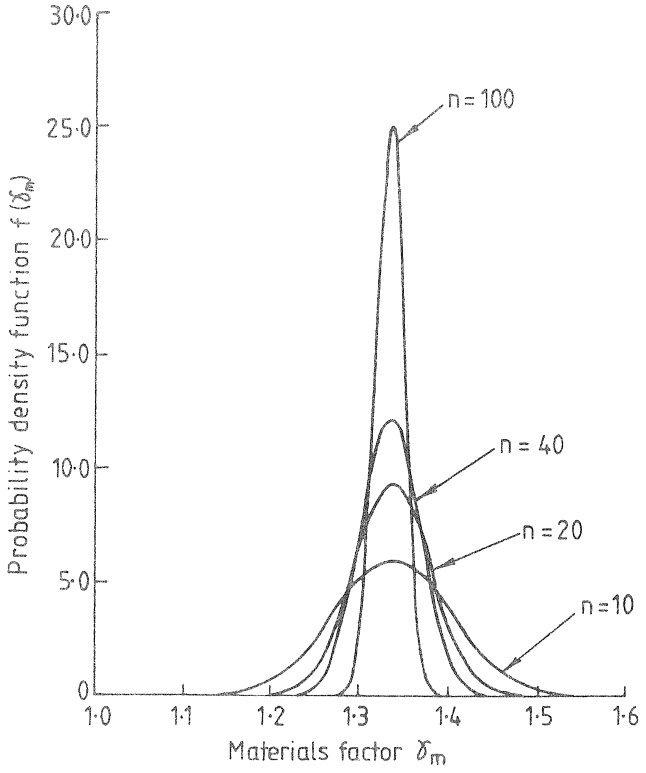


Probability density function for $\gamma_m$ for bolted joints with C.V.($f_s$) = 0·083 and $\gamma_m$(true) = 1·34

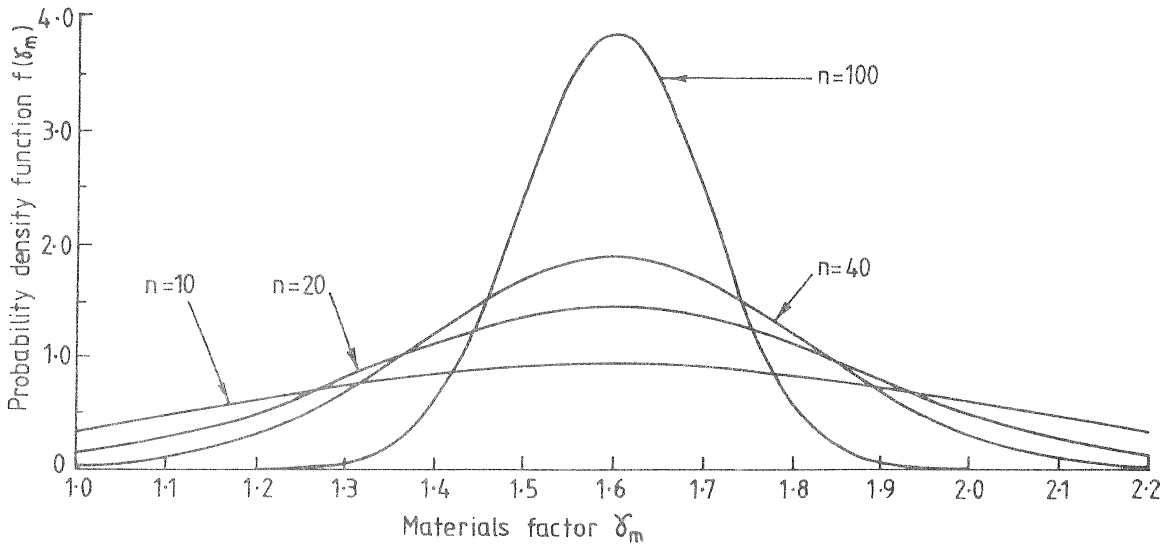


Probability density functions for $\gamma_m$ for an example with: C.V.($f_s$) = 0·25 and $\gamma_m$(true) = 1·6

— eg joints with possibility of brittle failure (also fairly representative of in-grade softwood data)

# Typical results: embedment tests: Tension parallel to grain/face grain — 3·35mm nail, mean maximum load

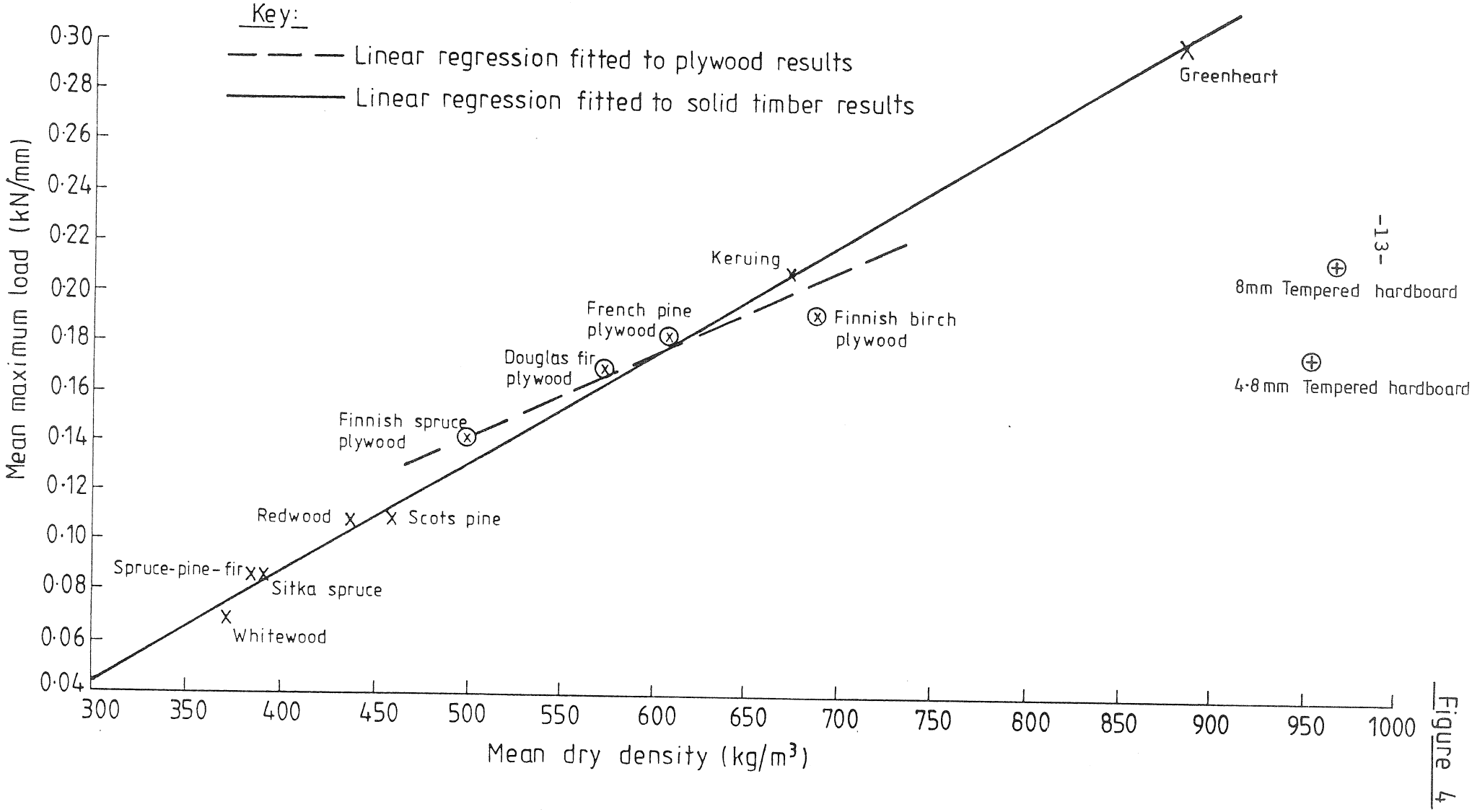




Figure 4

Figure 5

Typical results: embedment tests: Tension parallel to grain, 3·35mm nails
— Mean loads at given connector embedments

| Displacement δ (mm) | Gradient ×10⁻³ | Intercept ×10⁻¹ | $R^2$ |
|---|---|---|---|
| 0·05 | 0·201 | −0·604 | 0·95 |
| 0·10 | 0·310 | −0·905 | 0·97 |
| 0·20 | 0·405 | −1·125 | 0·99 |
| 0·40 | 0·460 | −1·219 | 0·99 |
| 1·00 | 0·544 | −1·458 | 0·99 |
| 1·25 | 0·578 | −1·568 | 0·98 |
| 1·50 | 0·613 | −1·681 | 0·97 |
| 1·75 | 0·643 | −1·744 | 0·97 |
| 2·00 | 0·683 | −1·905 | 0·96 |

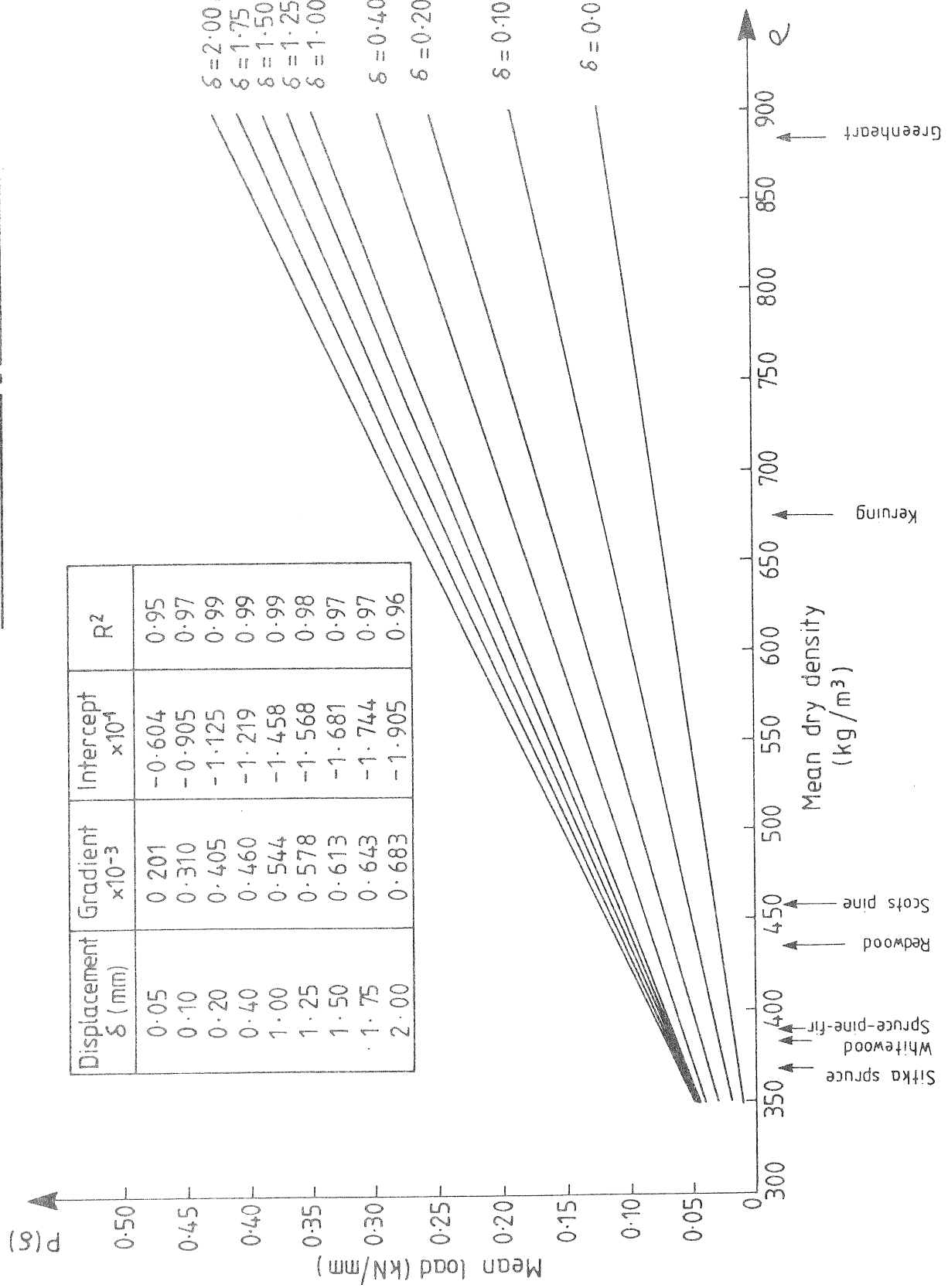

Figure 6

# Embedment characteristics predicted on the basis of density trends

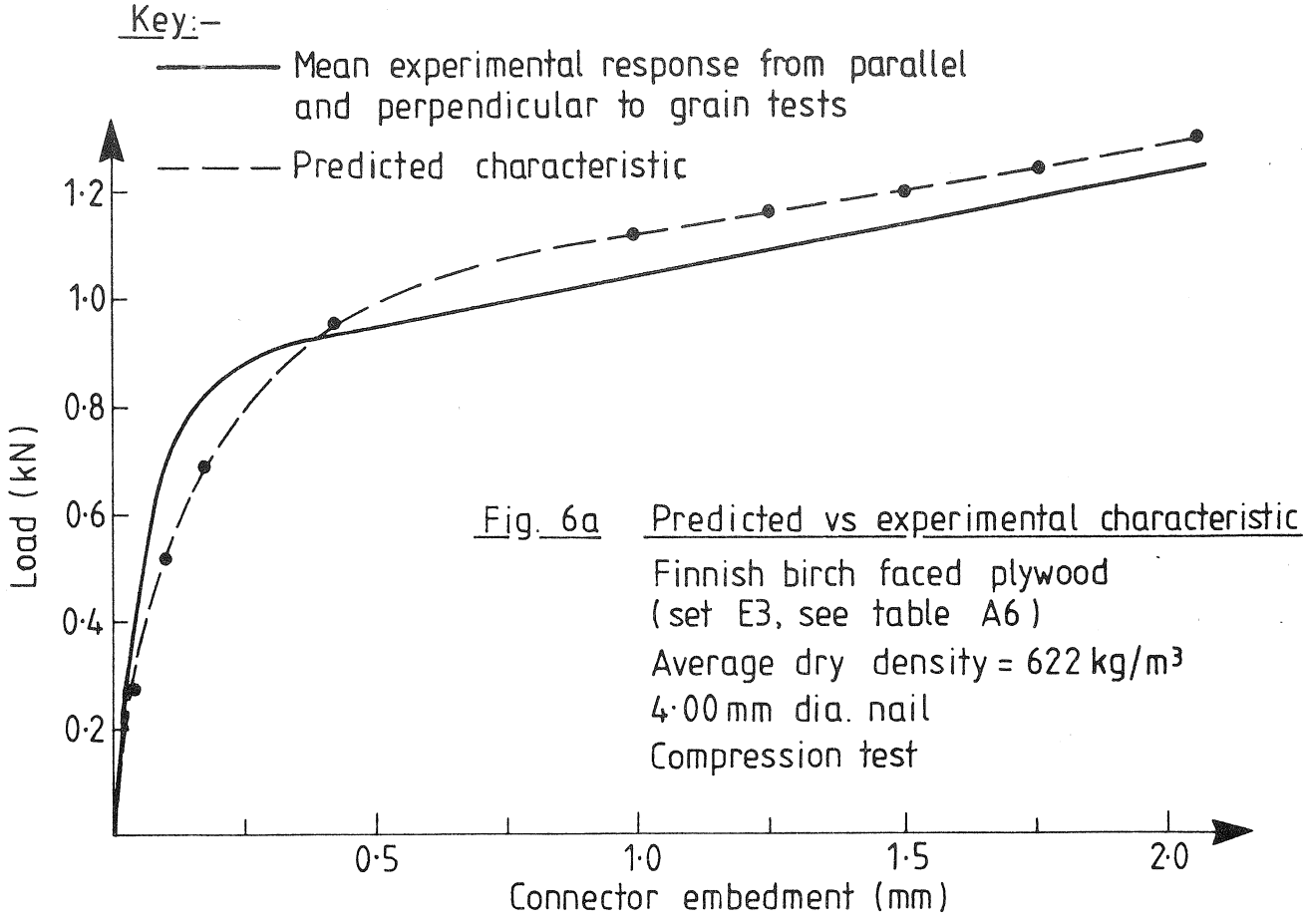


Fig. 6a Predicted vs experimental characteristic

Finnish birch faced plywood
(set E3, see table A6)
Average dry density = 622 kg/m³
4·00 mm dia. nail
Compression test

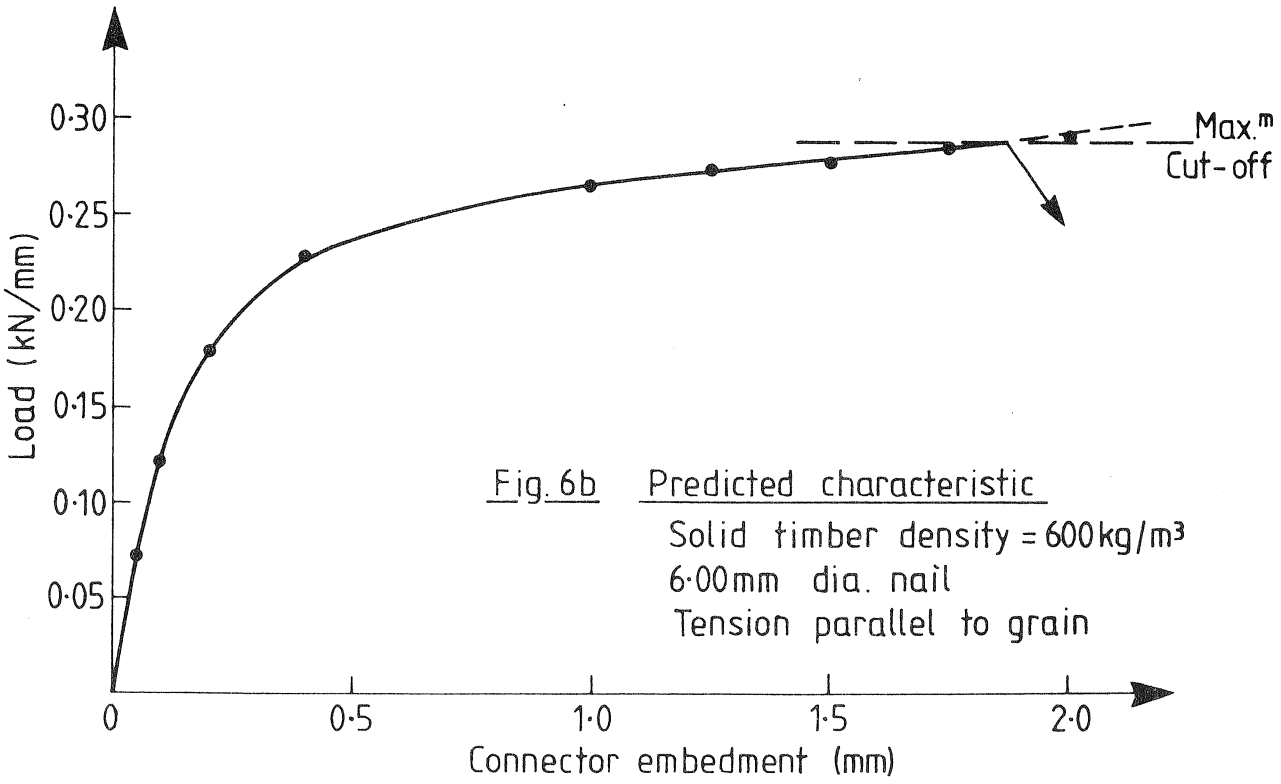


Fig. 6b Predicted characteristic

Solid timber density = 600 kg/m³
6·00 mm dia. nail
Tension parallel to grain

## Table 2 Summary of results from tensile tests on hexagon head black bolts to BS 4190 : 1967

| Description | d (mm) | | | Mo E (kN/mm) | | | $\sigma_{yield}$ (N/mm) | | | $\sigma_{ult}$ (N mm) | | | $\frac{\sigma_{yield}+\sigma_{ult}}{2}$ |
|---|---|---|---|---|---|---|---|---|---|---|---|---|---|
| | mean | S.D | C.V (%) | mean | S.D | C.V (%) | mean | S.D | C.V (%) | mean | S.D | C.V (%) | mean |
| M8 – 120 cold formed | 7·87 | 0·005 | 0·06 | 204·3 | 4·2 | 2·1 | 531·5 | 13·4 | 2·5 | 620·9 | 15·8 | 2·5 | 576·2 |
| M12 – 110 cold formed | 12·11 | 0·094 | 0·78 | 209·6 | 3·1 | 1·5 | 483·3 | 29·7 | 6·1 | 569·7 | 46·2 | 8·1 | 526·5 |
| M12 – 200 hot forged | 12·20 | 0·044 | 0·36 | 211·0 | 5·1 | 2·4 | 314·9 | 10·7 | 3·4 | 476·0 | 2·62 | 0·6 | 395·5 |
| M16 – 200 hot forged | 16·21 | 0·052 | 0·32 | 210·3 | 2·4 | 1·1 | 349·7 | 5·2 | 1·5 | 528·3 | 3·7 | 0·7 | 439·0 |
| M20 – 200 hot forged | 20·05 | 0·058 | 0·29 | 209·3 | 3·2 | 1·6 | 333·6 | 23·2 | 7·0 | 512·0 | 24·5 | 4·8 | 422·8 |
| | | | mean | 207·0 – cold formed<br>(210·2) – hot forged | | | 507·4<br>(332·7) | | | 595·3<br>(505·4) | | | 551·4<br>(419·1) |
| | | | S.D. | 2·16 – cold formed<br>(0·70) – hot forged | | | 24·1<br>(14·2) | | | 25·6<br>(21·9) | | | 24·9<br>(18·0) |
| | | | C.V (%) | 1·05 – cold formed<br>(0·33) – hot forged | | | 4·75<br>(4·27) | | | 4·30<br>(4·32) | | | 4·51<br>(4·28) |



Conclusions: 1. Should recognise the difference between cold formed and hot forged bolts for the purposes of strength calculations
2. In analytical models of joints should use $f_y = \frac{\sigma_{yield}+\sigma_{ult}}{2}$, as rough inclusion of strain hardening effects

# Typical joint load - slip results - Nailed transverse tension joint

## -ARRANGEMENT

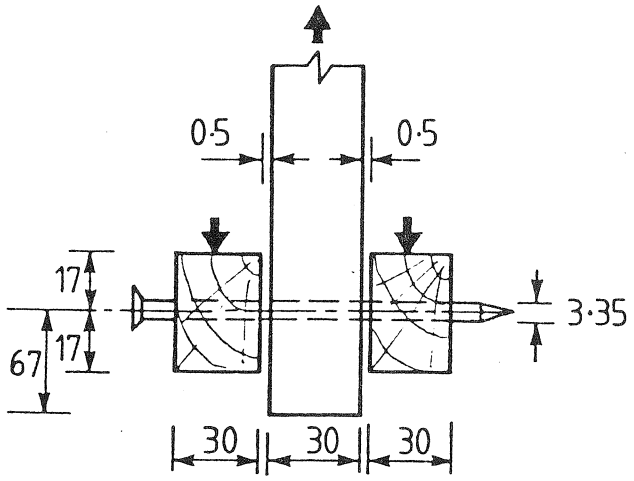


Set HH2
Keruing members

## —RESULTS (mean response)

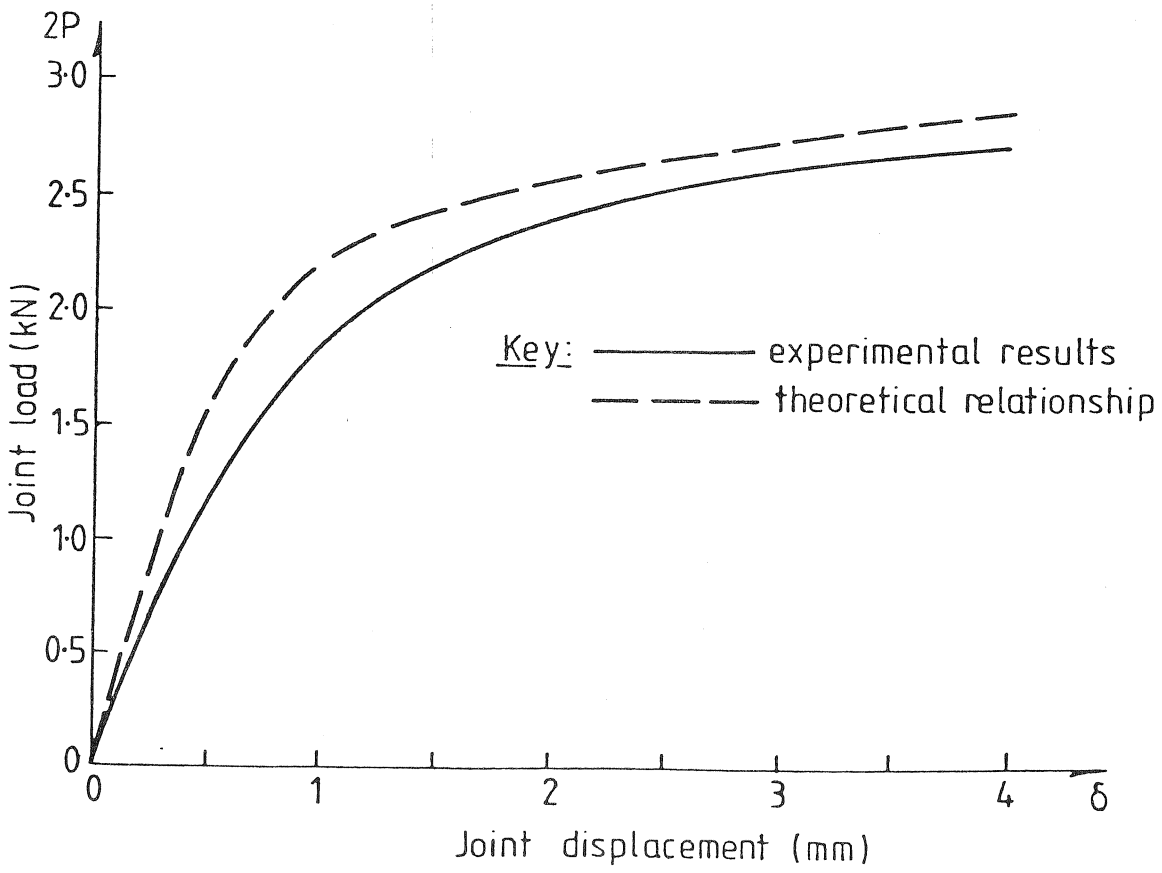

Figure 8

# Typical joint load - slip results - Bolted parallel compression joint

## — ARRANGEMENT

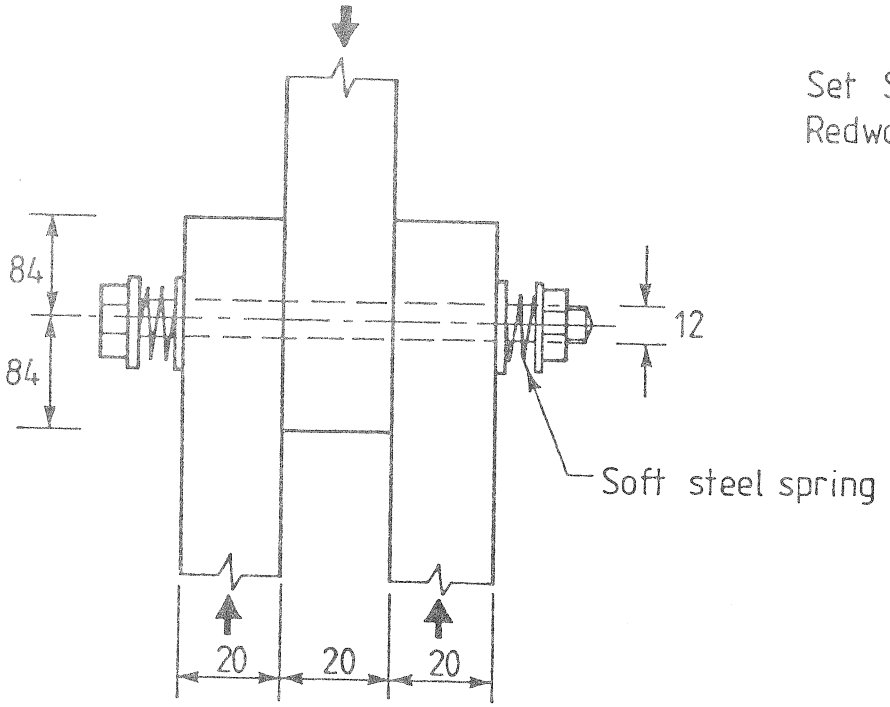


## — RESULTS (mean response)

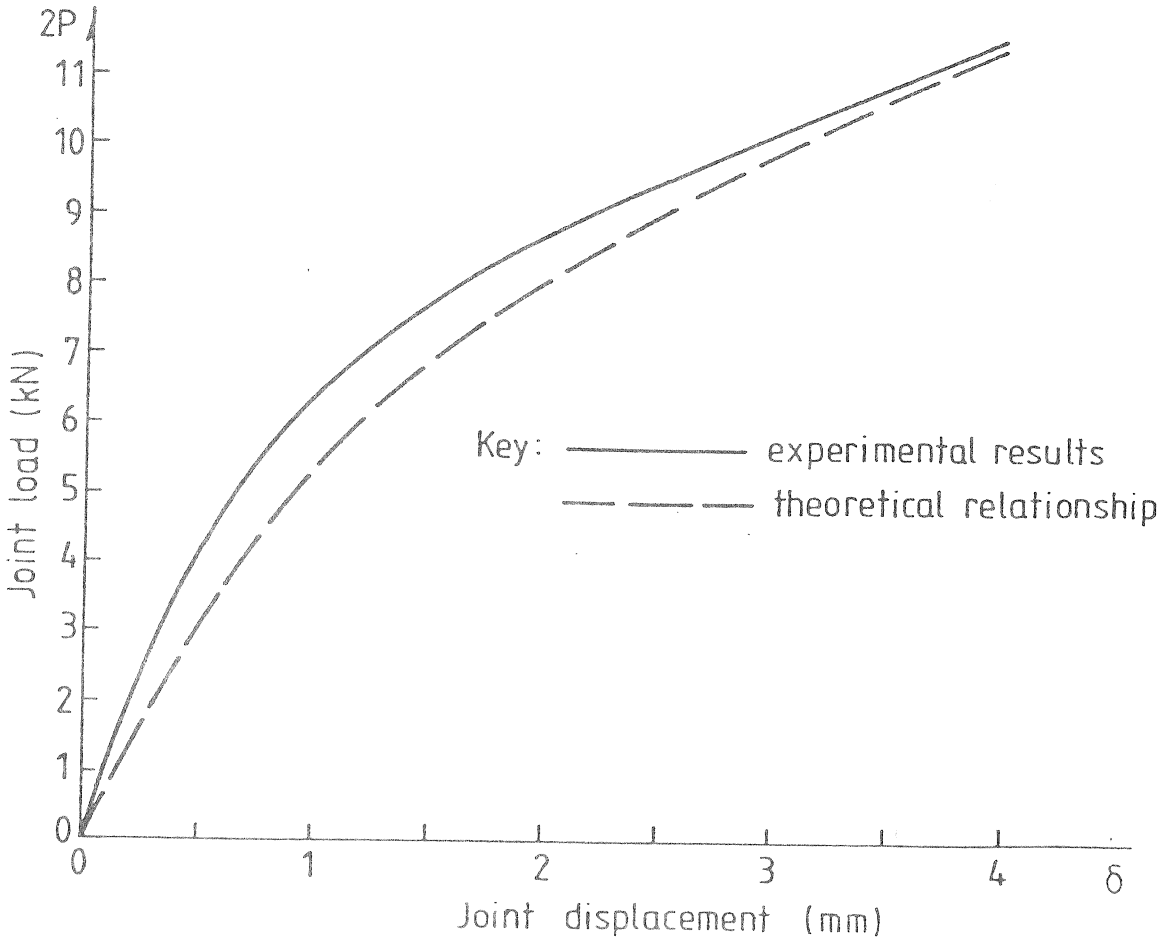

Figure 9

Results from multi-step long-term tests on bolted joints
– Comparison of experimental responses with predictions from linear viscoelastic theory

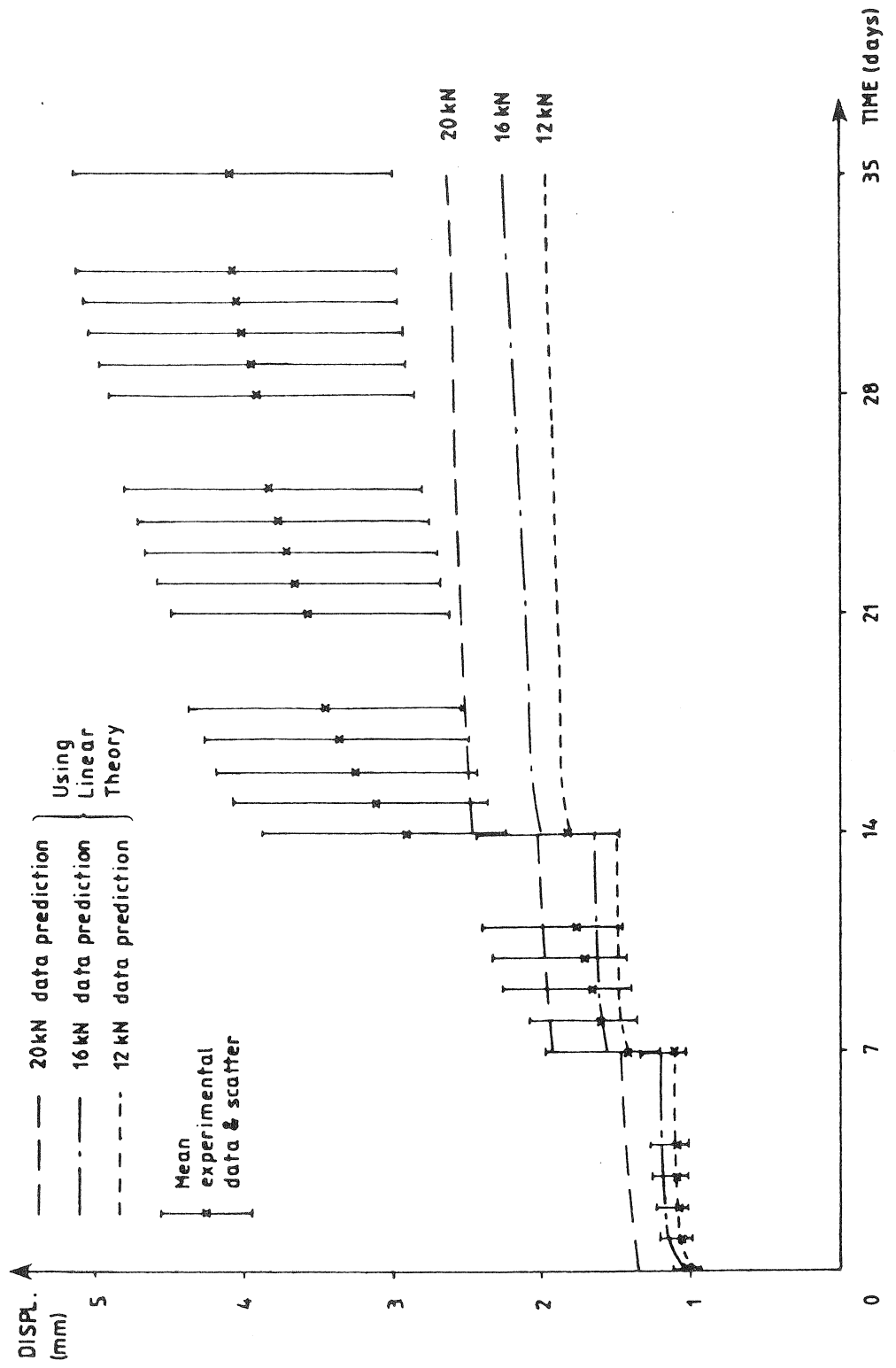

## APPENDIX

Details of the test programmes undertaken

# Table A1 Programme of solid timber embedment tests

| TIMBER SPECIES | TYPE OF TEST | NAIL DIAMETERS (mm) | | | | | BOLT DIAMETERS (mm) | | | | TOTAL NUMBER OF TESTS |
|---|---|---|---|---|---|---|---|---|---|---|---|
| | | 6·00 | 5·00 | 4·00 | 3·35 | 2·65 | M 20 | M 16 | M 12 | M 8 | |
| EUROPEAN REDWOOD | A | 20 | 20 | 20 | 20 | 20 | 20 | 20 | 20 | 20 | 180 |
| | B | 20 | | | 20 | | 20 | | 20 | | 80 |
| | C | 20 | 20 | 20 | 20 | 20 | 20 | 20 | 20 | 20 | 180 |
| EUROPEAN WHITEWOOD | A | 20 | | | 20 | | 20 | | 20 | | 80 |
| | B | | | | | | | | | | |
| | C | 20 | | | 20 | | 20 | | 20 | | 80 |
| CANADIAN SRUCE-PINE-FIR | A | 20 | | | 20 | | 20 | | 20 | | 80 |
| | B | | | | | | | | | | |
| | C | 20 | | | 20 | | 20 | | 20 | | 80 |
| UK SITKA SPRUCE | A | 20 | 20 | 20 | 20 | 20 | 20 | 20 | 20 | 20 | 180 |
| | B | 20 | | | 20 | | 20 | | 20 | | 80 |
| | C | 20 | 20 | 20 | 20 | 20 | 20 | 20 | 20 | 20 | 180 |
| UK SCOTS PINE | A | 20 | | | 20 | | 20 | | 20 | | 80 |
| | B | | | | | | | | | | |
| | C | 20 | | | 20 | | 20 | | 20 | | 80 |
| KERUING | A | 20 | | | 20 | | 20 | | 20 | | 80 |
| | B | 20 | | | 20 | | 20 | | 20 | | 80 |
| | C | 20 | | | 20 | | 20 | | 20 | | 80 |
| GREENHEART | A | 20 | | | 20 | | 20 | | 20 | | 80 |
| | B | | | | | | | | | | |
| | C | 20 | | | 20 | | 20 | | 20 | | 80 |
| | | | | | | | | | | TOTAL | 1760 |

KEY: A = Tension parallel to grain
B = Compression parallel to grain
C = Compression perpendicular to grain

## Table A2 Programme of plywood embedment tests

| VENEER SPECIES | TEST TYPE | DIRECTION OF LOADING TO THE FACE GRAIN | NAIL DIAMETERS (MM) | | | | | TOTAL NUMBER OF TESTS |
|---|---|---|---|---|---|---|---|---|
| | | | 2·65 | 3·00 | 3·35 | 3·75 | 4·00 | |
| FINNISH BIRCH | Tensile | Parallel | | | 20 | | | 20 |
| | | Perpendicular | | | 20 | | | 20 |
| | Compressive | Parallel | 20 | 20 | 20 | 20 | 20 | 100 |
| | | Perpendicular | 20 | 20 | 20 | 20 | 20 | 100 |
| NORTH AMERICAN DOUGLAS FIR | Tensile | Parallel | | | 20 | | | 20 |
| | | Perpendicular | | | 20 | | | 20 |
| | Compressive | Parallel | 20 | 20 | 20 | 20 | 20 | 100 |
| | | Perpendicular | 20 | 20 | 20 | 20 | 20 | 100 |
| FINNISH SPRUCE | Tensile | Parallel | | | 20 | | | 20 |
| | | Perpendicular | | | 20 | | | 20 |
| | Compressive | Parallel | 20 | 20 | 20 | 20 | 20 | 100 |
| | | Perpendicular | 20 | 20 | 20 | 20 | 20 | 100 |
| FRENCH PINE | Tensile | Parallel | | | 20 | | | 20 |
| | | Perpendicular | | | 20 | | | 20 |
| | Compressive | Parallel | 20 | 20 | 20 | 20 | 20 | 100 |
| | | Perpendicular | 20 | 20 | 20 | 20 | 20 | 100 |
| | | | | | | | Total | 960 |

## Table A3 Programme of tempered hardboard embedment tests

| Nominal Hardboard Thickness | Test Type | Direction of loading to the board | Nail Diameters (mm) | | | | | Total number of tests |
|---|---|---|---|---|---|---|---|---|
| | | | 2·65 | 3·00 | 3·35 | 3·75 | 4·00 | |
| 4·8mm | Tensile | Lengthways | 20 | 20 | 20 | 20 | 20 | 100 |
| | | Widthways | 20 | 20 | 20 | 20 | 20 | 100 |
| | Compressive | Lengthways | | | 20 | | | 20 |
| | | Widthways | | | 20 | | | 20 |
| 8·0mm | Tensile | Lengthways | 20 | 20 | 20 | 20 | 20 | 100 |
| | | Widthways | 20 | 20 | 20 | 20 | 20 | 100 |
| | Compressive | Lengthways | | | 20 | | | 20 |
| | | Widthways | | | 20 | | | 20 |
| | | | | | | | Total | 480 |

# Table A4 Programme of nail bending tests

| MANUFACTURER | COUNTRY | TYPE OF NAILS | DRIVING TECHNIQUE | NOMINAL DIAMETERS (MM) | NUMBER OF BATCHES OF NAILS PER DIAMETER | NUMBER OF TEST REPLICATES | TOTAL NUMBER OF TESTS |
|---|---|---|---|---|---|---|---|
| 1 | UK | Bright wire circular | Hand | 2·65 3·35 4·00 5·00 6·00 | 3 | 20 | 300 |
| 2 | UK | " | Hand | 2·65 3·35 4·00 5·00 6·00 | 3 | 20 | 300 |
| 3 | UK | " | Hand | 2·65 3·35 4·00 5·00 6·00 | 3 | 20 | 300 |
| 4 | UK | " | Hand | 2·65 3·35 4·00 5·00 6·00 | 3 | 20 | 300 |
| 5 | B | Wire circular | Hand | 2·70 4·00 6·00 | 1 | 20 | 60 |
| 6 | B | " | Gun | 2·85 4·20 | 1 | 20 | 40 |
| 7 | D | " | Gun | 2·88 | 1 | 20 | 20 |
| 8 | DK | " | Hand | 2·65 4·00 6·00 | 1 | 20 | 60 |
| 9 | NL | " | Hand | 2·70 4·00 6·00 | 1 | 20 | 60 |
| | | | | | | Total | 1440 |

UK signifies United Kingdom
B signifies Belgium
D signifies Federal Republic of Germany
DK signifies Denmark
NL signifies Netherlands

Table A5 Programme of tensile bolt tests

| Bolt diameter | Method of production | Number of tests |
|---|---|---|
| M8 | Cold formed | 15 |
| M12 | Cold formed | 15 |
| | Hot forged | 15 |
| M16 | Hot forged | 15 |
| M20 | Hot forged | 15 |
| | Total | 75 |

## Table A6 Programme of validatory embedment tests on plywoods with mixed veneer species

| REF. | PLYWOOD TYPE | PLYWOOD CONSTRUCTION | TEST TYPE | DIRECTION OF LOADING TO THE FACE GRAIN | NAIL DIAMETER (MM) | | TOTAL NUMBER OF TESTS |
|---|---|---|---|---|---|---|---|
| | | | | | 3·35 | 4·00 | |
| E1 | Canadian Douglas fir faced plywood | 3 ply with internal veneer of Eastern Canadian Spruce | Compression | Parallel | | 20 | 20 |
| | | | | Perpendicular | | 20 | 20 |
| E2 | | | Tension | Parallel | 20 | | 20 |
| | | | | Perpendicular | 20 | | 20 |
| E3 | Finish birch faced plywood | 5ply with alternate Finish birch and Finish spruce veneers | Compression | Parallel | | 20 | 20 |
| | | | | Perpendicular | | 20 | 20 |
| E4 | | | Tension | Parallel | 20 | | 20 |
| | | | | Perpendicular | 20 | | 20 |
| | | | | | | Total | 160 |

## Table A7 Programme of validatory joint tests (All 3-piece joints)

| REF | CONNECTOR SPECIFICATION | | | SIDE MEMBER | | MIDDLE MEMBER | | JOINT SPECIFICATION | | EXPECTED FAILURE MODE | NUMBER REPLICATIONS |
|---|---|---|---|---|---|---|---|---|---|---|---|
| | TYPE | DIAMETER | NO./JOINT | MATERIAL | THICKNESS | MATERIAL | THICKNESS | SHEAR PLANES | TYPE | | |
| SS1 | Wire Nail | 3·35 | 1 | Sitka Spruce | 20 mm | Sitka Spruce | 20 mm | 2 | PTC | 1B/2 | 20 |
| SS2 | Wire Nail | 3·35 | 1 | Sitka Spruce | 20mm | Sitka Spruce | 20mm | 2 | PPC | 2 | 30 |
| SS3 | Wire Nail | 3·35 | 1 | Sitka Spruce | 20mm | Sitka Spruce | 20mm | 2 | PPT | 2 | 30 |
| HH1 | Wire Nail | 3·35 | 1 | Keruing | 30 mm | Keruing | 30 mm | 2 | PTC | 3 | 20 |
| HH2 | Wire Nail | 3·35 | 1 | Keruing | 30 mm | Keruing | 30 mm | 2 | PTT | 3 | 20 |
| HH3 | Wire Nail | 3·35 | 1 | Keruing | 30 mm | Keruing | 30 mm | 2 | PPC | 3 | 20 |
| SS4 | Black Bolt | M12 | 1 | Redwood | 15 mm | Redwood | 30 mm | 2 | PTC | 1A | 20 |
| SS5 | Black Bolt | M12 | 1 | Redwood | 20 mm | Redwood | 20 mm | 2 | PPC | 1B | 20 |
| SS6 | Black Bolt | M12 | 1 | Redwood | 20mm | Redwood | 20 mm | 2 | PPT | 1B | 20 |
| HH4 | Black Bolt | M20 | 1 | Keruing | 20mm | Keruing | 20mm | 2 | PPC | 1B | 20 |
| HH5 | Black Bolt | M20 | 1 | Keruing | 15 mm | Keruing | 30mm | 2 | PTC | 1A | 20 |
| BS1 | Wire Nail | 3·35 | 4 | Redwood | 27·6mm | Redwood | 37mm | 1 | PTC | 3 | 10 |
| BS2 | Wire Nail | 3·35 | 4 | Redwood | 27·6mm | Redwood | 37mm | 1 | PPC | 3 | 10 |
| SP1 | Wire Nail | 3·35 | 2 | Finish birch Plywood | Nominal 6·75mm | Sitka Spruce | 35mm | 1 | PPC | 1 | 20 |
| SP2 | Wire Nail | 3·35 | 2 | Finish birch Plywood | Nominal 6·75mm | Sitka Spruce | 35mm | 1 | PPT | 1 | 20 |
| SP3 | Wire Nail | 3·35 | 2 | Douglas fir Plywood | Nominal 6·00mm | Redwood | 50mm | 1 | PTT | 2A | 30 |
| SP4 | Wire Nail | 3·35 | 2 | Douglas fir Plywood | Nominal 6·00mm | Redwood | 50 mm | 1 | PTC | 2A | 30 |
| SHb1 | Wire Nail | 3·35 | 2 | Tempered Hardboard | Nominal 8mm | Sitka Spruce | 50 mm | 1 | PPC | 1 | 20 |
| SHb2 | Wire Nail | 3·35 | 2 | Tempered Hardboard | Nominal 4·8mm | Sitka Spruce | 50mm | 1 | PPC | 1A | 20 |
| SHb3 | Wire Nail | 3·35 | 2 | Tempered Hardboard | Nominal 4·8mm | Sitka Spruce | 50 mm | 1 | PPT | 1 | 20 |
| | | | | | | | | | | TOTAL | 420 |

KEY

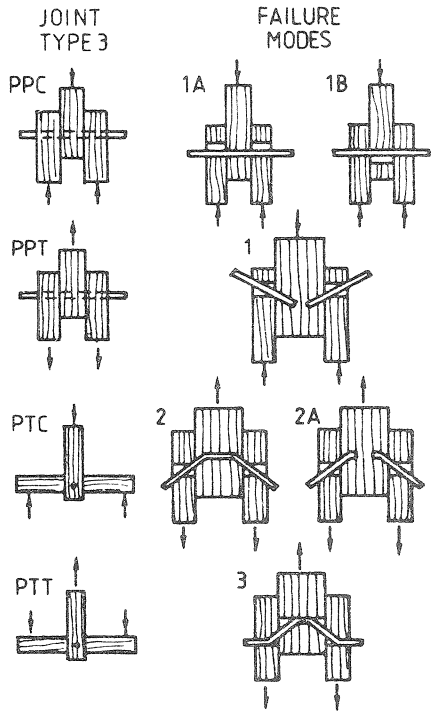

CIB-W18/19-7-2

INTERNATIONAL COUNCIL FOR BUILDING RESEARCH STUDIES AND DOCUMENTATION

WORKING COMMISSION W18 - TIMBER STRUCTURES

# GLUED BOLTS IN GLULAM

by

H Riberholt
Technical University of Denmark
Denmark

MEETING NINETEEN
FLORENCE
ITALY
SEPTEMBER 1986

Afdelingen for Bærende Konstruktioner
Department of Structural Engineering
Danmarks Tekniske Højskole · Technical University of Denmark

# Glued Bolts in Glulam

H. Riberholt

Extract containing the basic results with glued bolt connectors and parts of the chapters dealing with connections of glued bolts.

The report may be ordered from the Department of Structural Engineering, Technical University of Denmark, Building 118, 2800 Lyngby, Denmark.

Serie R No 210 1986

# 1. GENERAL

## 1.1. Summary and conclusions


English

An economic and convenient production method for glued bolt connections has been developed. The bolts were placed in over size holes and glue was then injected.

For practical reasons only threaded rods were employed. The axial capacity of these is not very sensitive to minor defects in the bonding to the steel.

The tests show that the bolt connection can be used even for large changes in the moisture content of the wood. The steel surface is to a certain degree protected against corrosion by the employed polyurethan and epoxy glues. But under severe corrosive conditions zinc coatings or similar should be used.

The axial and lateral load-carrying capacity of a bolt connection has been found experimentally. The capacities were similar to those reported in the literature, but here essentially smaller distances to the wood edges and in between the bolts were employed. Further, the axial capacity was found to be higher for the more flexible polyurethan glue.

For axial loaded bolt connections long term tests were carried out in which the moisture content of the wood was changed. It appears that for out door service the long term capacity is approximaely half the short term capacity of dry specimens.

Further for some selected types of connections with glued bolts tests were carried out in order to verify the proposed calculation methods and theories of the static behaviour. The following were investigated:

Moment stiff column-foundation joint
Trimmer joint
Moment stiff frame corner
Splitting of laterally loaded glulam beams

In general it can be stated that glued bolt connections can be designed with a capacity comparable to that of a glulam element. As an example the moment capacity of the tested moment stiff column-foundation joint was found to be approximately 75% of that of the glulam column. And the connection could easily be designed stronger.

The tests with the frame corner revealed that, if several glued bolts are intended to carry the load together, then it is essential to design the connection so that the forces can be distri-

buted evenly. Otherwise, the glued length employed has to be of a size that the bolt yields before being pulled out. Because in this way an initial uneven force distribution can be equalized before failure occur due to ductility of the bolt connection.

## 1.2. Object

The object of the project was:

A. Development of a reliable production method.

B. Development of corrosion resistant glued bolt connections for outdoor service.

C. Determination of the axial strength and the lateral load-carrying capacity for glued bolt connections. Further determination of minimum distances for obtaining the load-carrying capacities.

D. Accomplishment of some full scale tests to elucidate suitable applications and as background for dimensioning methods.

As starting basis the project had the report /Riberholt, 1977/ which deals with threaded rod connections glued with resorcinol glue. From this basis it was the intention to investigate partly the effect of glue types which can bond to steel, and partly the applicability of glued bolt connections for outdoor service.

## 1.3. Introduction

Since the middle of the seventies glued bolt connections have been used in Denmark and for example some years later in Germany, too. The high axial strength and stiffness of the glued bolt connections has opened new design possibilities for connections in wood, especially glulam.

Through the years a positive experience has been gained with glued bolts in indoor and covered structures. There existed an interest in an investigation of the possibilities of using glued bolt connections in outdoor structures.

Until now the glued bolts (threaded rods) were bonded with resorcinol glue. But this glue type does not adhere to steel. It was therefore expected that with glues capable to adhere to steel higher strength or smaller edge distances could be obtained.

So far no tests or analyses on connections with glued bolts have been carried out.

## 2. PRODUCTION, DESIGN AND CORROSION PROTECTION OF GLUED BOLT CONNECTIONS

### 2.1. Production and design

It was the object to develop a glue economic and convenient production method which can be used for many types of connections in coniferous soft wood. The gluing should preferably be done in a factory, but under protected conditions it can also be done on site.

As the major area of application is in glulam structures, it was chosen to use glulam of spruce, picea abies, for all the specimens.

It was chosen to employ threaded rods mainly due to the fact that the requirements to the cleaning of the metal surface would not be very high because of the larger surface and mechanical engagement. Gluing of smooth rods were not assessed to be reliable under normal workmanship in the building industry.

The following thermo setting glues were used

> 2-component polyurethan glue from Sadofoss: Foss-Than 2k 959 and hardener 956 (methylendiphenyldiisocyanat).
>
> 2-component araldit glue from Ciba-Geigy: Araldit AW 139 and hardener HV 998.

Further a thermoplast based on polyurethan chemistry was used. But it proved to be much weaker and to give large deformations.

The cleaning of the threaded rods was done with trichlorethan. The best procedure was found to be: 1) First brush the rods with trichlorethan and 2) then rinse them with clean trichorethan. The trichlorethan was allowed to evaporate for at least half an hour before the rods were glued.

This cleaning procedure should be followed carefully. Better procedures are recommended, for example sand blasting.

Some pilot gluing tests with steel plates which later were split, showed an adhesion to the plates in the following descending order: Sand blasted, trichlorethan treated, untreated. Sand blasting resulted clearly in the best adhesion and pealing off strength.

The holes were drilled with a diameter 1 mm larger than the diameter of the thread. This clearance gave suitable conditions for injection of the polyurethan glue, but for the more viscos araldit the injection was more difficult and in some examples inadequate.

The application of glue was done by injection, because it allows application of glue in almost all positions of the bolt connec-

tion. Further it is a glue economic application procedure.

The injection is shown in principle in figure 4.1. Opposite the injection hole there is an airing hole which preferably should be positioned higher than the injection hole. The injection was continued until glue was coming out of the airing hole.

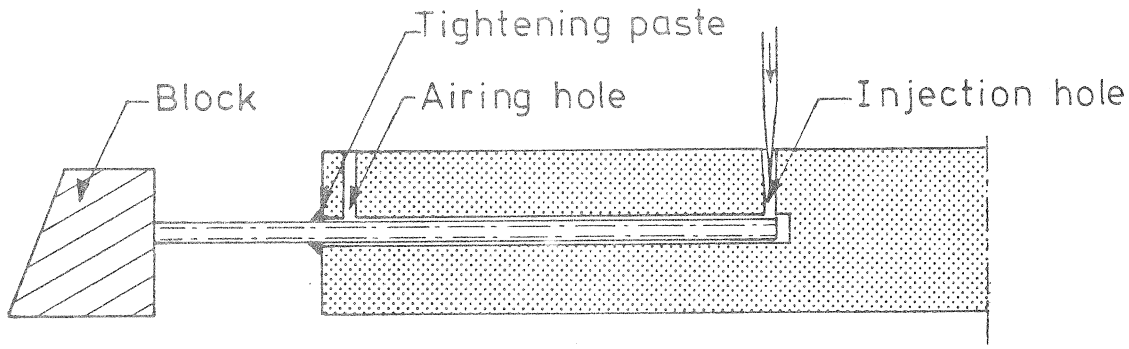


Figure 2.1 Injection of a glued bolt connection.

During injection it is necessary to secure that the rod is not pressed out by the glue. A stop block at the protruding end of the rod can be used or small plates engaged to the thread and fastened to the wood.

At the wood surface a tightening paste, for example putty, prevents the glue from being squeezed out.

It was found that brushing glue on the threaded rod before injection did not give a better gluing result than injection only.

The hardening occurred at normal room temperature, approximately 20-22°C, and relative moisture content of the air of 50-70 percent.

The moisture content of the wood is important for the hardening of polyurethan glue, because a high moisture content will result in a strength reducing foaming of the glue. The glue manufacturer prescribes a moisture content below 10 percent, but the gluing has been carried out at moisture contents in the range of 11 to 13 percent. This resulted in some foaming. Higher moisture contents of the wood should not be allowed at the production of glued bolt connections.

## 2.2. Protection against corrosion of the glued bolt connection

Two types of protection has been investigated, zinc coating and protection due to the glue.

The glued bolt connection has been exposed to several types of corrosive environment

Wetting with fresh water/drying under an axial tension load of approx. half the short term strength. Duration per cycle 1 1/2 to 3 months.

Submerging in salt water/drying cycles, 4 cycles during 2 1/2 months. The moisture content varied between 10% and 30% approximately. The bolt connections were either never loaded or the non-broken end of an axial loaded test specimen. The rods were either electric zinc-coated with a thickness of 15 to 20 µ , or unprotected.

Pressure impregnated 3 times with a CCA-treatment (spruce Picea Abies was used) and dried in between in the course of 3 weeks.

Table 2.1 Results of corrosive treatments.
Four replicants of each specimen.

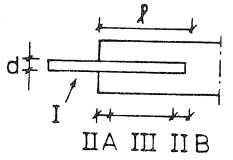


| Treatment | $l_g$ mm | d mm | Protection | Part: I | IIA | III | IIB |
|---|---|---|---|---|---|---|---|
| | | | | Lengths in mm and corrosion conditions | | | |
| Wet/dry, fresh water | 240 | 12 | zinc coat. Araldit | 0z | 0z | 0z | 0z |
| Press, Imp | 300 | 20 | Unprotec. Polyurethan | 2 | l=30 1 | 0 | 0 |
| Submerging in salt water and drying: | | | | | | | |
| Loaded | 300 | 20 | zinc coat. Polyurethan | 3z | 0z | 0z | 0z |
| | | | (1 specimen | | | local | l=60) |
| | | | ( | | 0z | lz | lz) |
| No load | 300 | 20 | zinc coat. Polyurethan | 3z | l=10 lz | 0z | l=10 lz |
| Loaded | 300 | 20 | Unprotec. Polyurethan | 3 | l=20-50 1-2 | local 1 | l=20-50 1-2 |
| | | | (1 specimen | 3 | 3 | 3 | 3) |
| No load | 300 | 20 | Unprotec. Polyurethan | 3 | l=10-30 1 | local 1 | l=20-50 1 |

| | | | | | | | |
|---|---|---|---|---|---|---|---|
| Loaded | 300 | 20 | Unprotec. | | 1=70-95 | | 1=20-90 |
| | | | Araldit | 3 | 1-2 | 0 | 1 |
| No load | 300 | 20 | Unprotec. | | 1=10-30 | | |
| | | | Araldit | 3 | 1-2 | 0 | 0 |

---

Corrosion classification:

| | | | |
|---|---|---|---|
| 0 | No rust | 0z | No zinc corrosion |
| 1 | Slight surface rust | 1z | Slight zinc corrosion |
| 2 | Surface rust | 2z | Zinc corrosion |
| 3 | Severe rust | 3z | Severe zinc corrosion or no zinc left |

---

In some cases the corrosion of a specimen differed from the others, so the results are given in brackets. There is some indication of the fact that the more widely spread corrosion in these cases is caused by a worse degreasing.

It can be seen that only a zinc coating can prevent corrosion under hard conditions, salt submerging. But it must be observed that the protruding part of the rod had almost no zinc left and severe rust formations. The corrosive environment was thus very hard.

Further the previous loaded specimens were more corroded than the ones never loaded. This might be caused by cracks formed during the loading.

It appears that no significant differences between the corrosive protection from the two glue types were found.

There is a distinct difference between the corrosion of the protruding steel parts and those embedded in glue and wood.

## 3. AXIAL SHORT TERM LOADING

This chapter concerns axial tension tests with a duration of 5 to 10 min. with glued bolts parallel to the wood fibres. In /Riberholt, 1977/ it is shown that glued bolt connections are stronger when in compression or when they are glued perpendicular to the grain

Long term loading and climatic expossure are dealt with in the next chapter.

### 3.1. Object

It was the object to measure the axial short term tensile strength of connections with glued bolts parallel to the grain as dependent of

- Glue type
- Minimum distances
- Gluing length
- Diameter
- Yielding of the rod
- Reinforcement by plywood sleeves
- Density
- Moisture content

Further minimum distances for obtaining reliable strengths should be established.

### 3.2. Test specimens and their treatment

The design of the basic test specimens were as shown in figure 3.1 and in table 3.1.

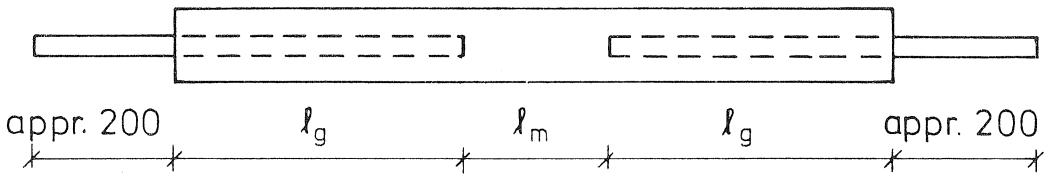


Front view

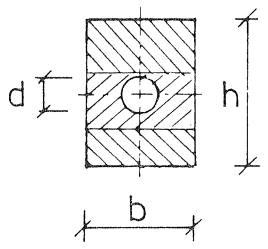


Cross section with some laminations

Figure 3.1 Basic test specimens of glulam with glued bolts parallel to the grain.

Table 3.1. Dimensions and design of specimens for axial tension tests.

| No. of Spec. | Diameters, mm Bolt d | Hole $d_h$ | Lengths, mm Glued $l_g$ | Middle $l_m$ | Cross sec., mm b | h | Glue | Remarks |
|---|---|---|---|---|---|---|---|---|
| Different glues and edge distances | | | | | | | | |
| 5 | 20 | 21 | 300 | 100 | 60 | 60 | PolyU. | |
| 5 | 20 | 21 | 300 | 200 | 60 | 60 | PolyU. | |
| 5 | 20 | 21 | 300 | 100 | 80 | 80 | PolyU. | |
| 10 | 20 | 21 | 300 | 200 | 60 | 60 | Arald. | |
| Another diameter | | | | | | | | |
| 10 | 12 | 13 | 180 | 140 | 36 | 36 | PolyU. | |
| 10 | 12 | 13 | 180 | 140 | 36 | 36 | Arald. | |
| Different glued lengths | | | | | | | | |
| 5 | 20 | 21 | 200 | 200 | 60 | 60 | PolyU. | |
| 5 | 20 | 21 | 400 | 200 | 60 | 60 | PolyU. | |
| 5 | 20 | 21 | 500 | 200 | 100 | 100 | PolyU. | |
| Yielding of the rod | | | | | | | | |
| 5 | 20 | 22 | 500 | 200 | 100 | 100 | PolyU. | Quality ISO 4.6 |
| Exposed to pressure impregnation and drying | | | | | | | | |
| 10 | 20 | 21 | 300 | 200 | 60 | 60 | PolyU. | Tested dry |
| 10 | 20 | 21 | 300 | 200 | 60 | 60 | PolyU. | Tested wet |
| Reinforced by birch plywood sleeves. The first type is a reference, the two next were exposed to pressure impregnation and drying | | | | | | | | |
| 5 | 20 | 21 | 300 | 200 | 60 | 60 | PolyU. | Reference |
| 5 | 20 | 21 | 300 | 200 | 60 | 60 | PolyU. | Tested dry |
| 5 | 20 | 21 | 300 | 200 | 60 | 60 | PolyU. | Tested wet |

The quality of the rods were chosen to either ISO 8.8 or ISO 4.6 so that yielding never occurred except for one case aimed at. Meanwhile the yielding stress of the supplied ISO 4.6 rods were approx. $\sigma_{0,2} = 480$ MPa.

It appears from table 3.1 that the edge distances were 1.5 d, 2 d or 2.5 d where d is the diameter of the rod. This resulted in tension stresses in the wood of a magnitude of 30 to 40 MPa.

Polyurethan was used for most specimens, partly because it was the cheapest, partly because is was the most convenient glue for injection.

Different rod diameters and gluing lengths were employed so that theoretical or empirical formulae can be set up for the load-carrying capacity.

The effect of yielding of the rod was investigated for one specimen type. Due to the high yielding stress of the rod the glued length and the cross section of the specimen should be relatively big to prevent other failure modes before yielding occurred.

Some test specimens were exposed to cycles of pressure impregnation with a water based CCA solution, and subsequent drying in a ventilated heating chamber at approximately 30° C. The specimens were tested after 3 wettings, some still wet and some dried.

This treatment resulted in a change of weight of approx. 300 to 400 g, which corresponds to a change in the overall moisture content of the wood of approx. 20 to 25%. This means that the overall moisture content changed between 12 and 35%. In the middle of the wood specimen the moisture content changed between 12 and 18%. This was measured by weighing and drying small bricks which were cut out.

On some test specimens 9 mm birch plywood sleeves were glued to the end grain around the rod. This reinforcement should counteract splitting of the wood specimen. Unfortunately, the sleeves were glued with a PVA glue, which for the pressure impregnated specimens resulted in a decrease in the effectiveness of the sleeves.

Distance between rods

Further some test specimens with rods d = 20 mm should reveal the effect of different distances between the rods.

The edge distance was 1.5 d = 30 mm whereas the in between distances was 2 d = 40 mm or 3 d = 60 mm , all for a glued length of 300 mm. For a smaller glued length an in between distance of 2d was expected to be sufficient.

When designing the specimens it was realized that tension failure in the wood cross section was likely due to the high strength of the rods and the connections.

The tested specimens were all glued with polyurethan glue, and they had dimensions as shown in figure 3.2 and in table 3.2.

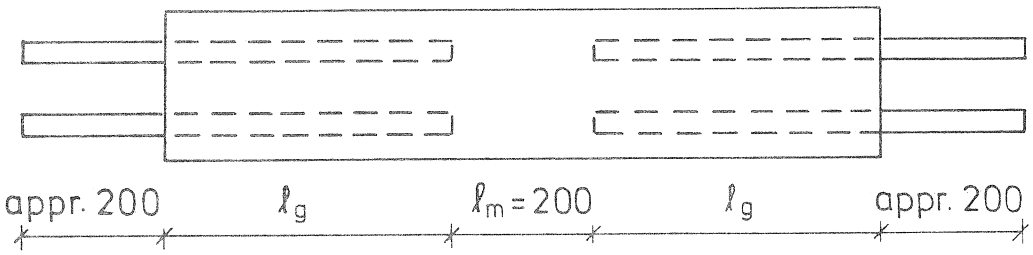


Front view

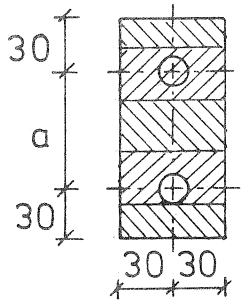


Diameters: Rod 20 mm
Hole 21 mm

Cross section with some laminations

Figure 3.2 Specimens with two glued threaded rods.

Table 3.2 Some dimensions of specimens with 2 rods in each end

| No. of specimens | Glued lengths lg mm | In between dist. a mm |
|---|---|---|
| 6 | 300 | 60 |
| 6 | 300 | 40 |
| 6 | 200 | 40 |

## 3.3. Test apparatus and testing

The tensile tests were carried out in a hydraulic universal testing machine, Mohr & Federhaff. with a capacity of 600 kN.

The specimens with one rod in each end were connected to the machine with nuts. Bearings with a spherical bush were used.

For the specimens with two rods in each end a special bearing was used, see figure 3.3. The RHS profil transferred the load from the two bolts to one bolt which was connected to the testing machine. This bearing was to secure that the two bolts were equally loaded.

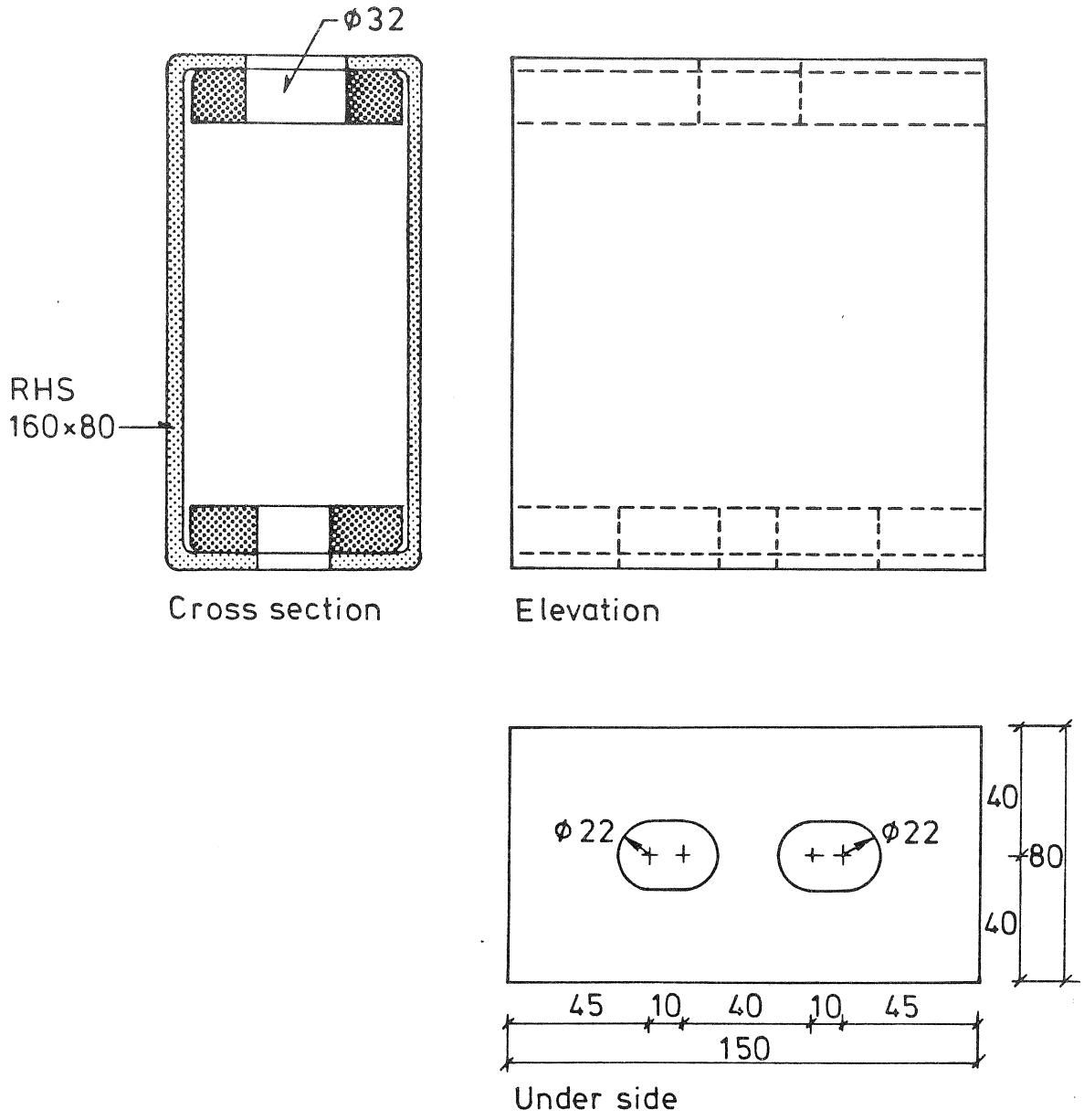


Figure 3.3 Bearing for specimens with two bolts in each end.

The pull out deformation between a point on the rod and the end grain surface was measured as shown in figure 3.4. Two Hewlett Packard 7 DCDT 1000 extensometers were used. They were connected to a two-pen xy-plotter so that the force and deformation of both bolt connections were drawn during the testing.

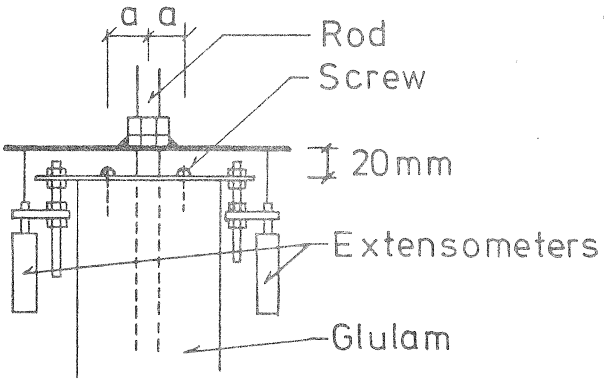


Rod-Screw distance a:

| | |
|---|---|
| d = 12 mm | a = 15 mm |
| d = 20 mm | a = 22 mm |
| $a_{edge} = 1.5d$ | |
| d = 20 mm | a = 30 mm |
| $a_{edge} = 2d$ | |

Figure 3.4 Apparatus for measuring the pull-out deformation.

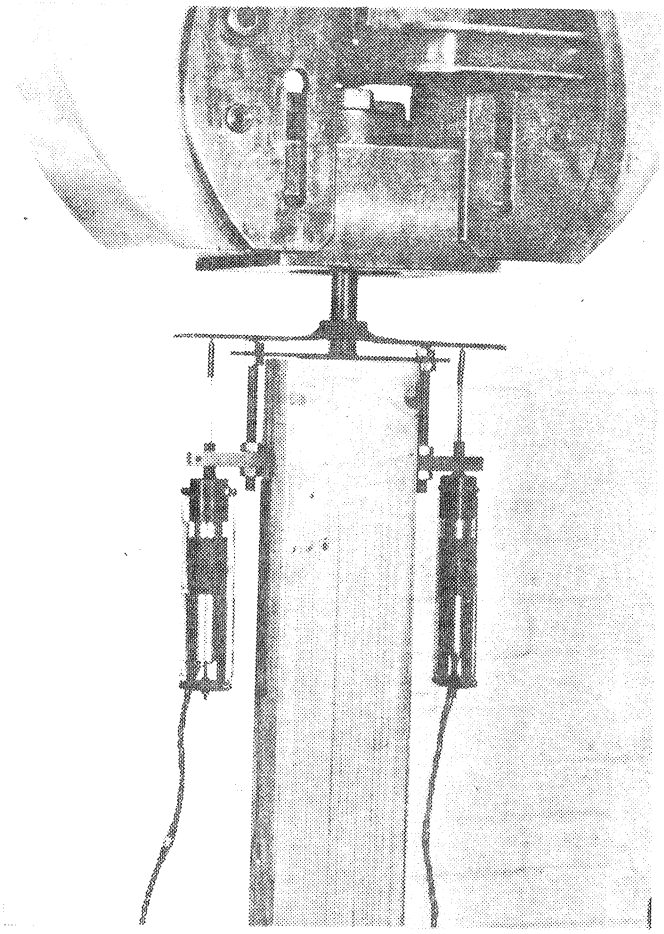

Figure 3.5 Photo of the testing machine.

After rupture density, moisture content and width of annual rings were measured in the lamination in which the rupture occurred. Density and moisture content were measured by drying small bricks. The density was determined on the dry weight and wet volume.

## 3.4. Results and discussion

The detailed measurements and failure modes are given in enclosure 1. The results are listed in the same order as in table 3.1 and 3.2. Table 3.3 contains a summary.

Some of the headings are defined as:

| | |
|---|---|
| No | Number of specimens |
| d | Outer diameter of the threaded rod |
| $d_h$ | Hole diameter |
| $l_g$ | Glued length of the rod |
| $a_e$ | Edge distance as multiplum of d |
| $e_b$ | Distance between bolts as multiplum of d |
| F | Total force on the specimen |
| $\tau$ | $F/(\pi d_h l_g)$ |

The failure modes were as listed below. The predominant ones are given in the table.

| | |
|---|---|
| S | Splitting of the wood |
| P | Pull out of the rod. The rupture surface was approximately within d from the rod. |
| T | Tension failure of the wooden cross section |

Table 3.3 Results of tensile tests

| No | d | $d_h$ | $l_g$ | $a_e$ | $a_b$ | Glue | Max force Mean | Max force St.dev | Max τ Mean | Max τ St.dev | Spec. dens. | Moist. cont. | Domi. Fail. Mode |
|---|---|---|---|---|---|---|---|---|---|---|---|---|---|
| | mm | mm | mm | | | | kN | kN | MPa | MPa | | % | |
| Different glues and edge distances | | | | | | | | | | | | | |
| 10 | 20 | 21 | 296 | 1,5d | | Poly | 114.7 | 18.0 | 5.88 | 0.96 | 0.39 | 12.3 | S+P+T |
| 5 | The same results sorted | | | | | | 123.3 | 12.9 | 6.39 | 0.64 | 0.44 | 12.1 | S+P |
| 5 | by failure modes | | | | | | 106.0 | 19.4 | 5.37 | 1.01 | 0.35 | 12.5 | T |
| 5 | 20 | 21 | 294 | 2d | | Poly | 119.3 | 11.2 | 6.14 | 0.60 | 0.43 | 10.8 | S+P |
| 10 | 20 | 21 | 294 | 1.5d | | Aral | 89.0 | 7.5 | 4.58 | 0.37 | 0.41 | 12.8 | S+P+T |
| 5 | The same results sorted | | | | | | 88.7 | 8.6 | 4.57 | 0.43 | 0.42 | 12.6 | S+P |
| 5 | by failure modes | | | | | | 89.2 | 7.3 | 4.60 | 0.34 | 0.41 | 13.0 | T |
| Another diameter | | | | | | | | | | | | | |
| 10 | 12 | 13 | 167 | 1.5d | | Poly | 48.7 | 3.9 | 7.15 | 0.64 | 0.43 | 11.7 | S+P |
| 10 | 12 | 13 | 172 | 1.5d | | Aral | 44.0 | 3.0 | 6.22 | 0.41 | 0.42 | 11.3 | S+P |
| Different glued lengths | | | | | | | | | | | | | |
| 5 | 20 | 21 | 190 | 1.5d | | Poly | 85.0 | 7.6 | 6.79 | 0.56 | 0.39 | 12.5 | S+P |
| 5 | 20 | 21 | 400 | 1.5d | | Poly | 109.1 | 11.4 | 4.13 | 0.43 | 0.39 | 12.6 | T |
| 5 | 20 | 22 | 503 | 2.5d | | Poly | 148.8 | 13.4 | 4.28 | 0.38 | 0.41 | 12.7 | S+P |
| Yielding of the rod | | | | | | | | | | | | | |
| 5 | 20 | 21 | 504 | 2.5d | | Poly | 137.3 | 17.9 | 3.94 | 0.51 | 0.40 | 12.7 | T-rod+S+P |
| Exposed to pressure impregnation and drying | | | | | | | | | | | | | |
| Tested dry | | | | | | | | | | | | | |
| 10 | 20 | 21 | 295 | 1.5d | | Poly | 106.5 | 28.0 | 5.46 | 1.40 | 0.39 | 11.9 | S+P |
| 8 | The same results sorted | | | | | | 114.6 | 24.1 | 5.88 | 1.17 | 0.40 | 12.0 | S+P |
| 2 | by failure modes | | | | | | 74.0 | 18.4 | 3.78 | 0.94 | 0.39 | 11.6 | T |
| Tested wet | | | | | | | | | | | | | |
| 10 | 20 | 21 | 285 | 1.5d | | Poly | 86.1 | 11.2 | 4.58 | 0.62 | 0.38 | 18.7 | S+P |
| 8 | The same results sorted | | | | | | 88.4 | 10.4 | 4.72 | 0.55 | 0.38 | 19.0 | S+P |
| 2 | by failure modes | | | | | | 76.8 | 13.8 | 4.01 | 0.72 | 0.35 | 17.7 | T |
| Reinforced by birch plywood sleeves, and the two types bottom most exposed to pressure impregnation and drying. | | | | | | | | | | | | | |
| 5 | 20 | 21 | 301 | 1.5d | | Poly | 128.8 | 15.4 | 6.48 | 0.75 | 0.40 | 11.9 | T |
| Tested dry | | | | | | | | | | | | | |
| 5 | 20 | 21 | 301 | 1.5d | | Poly | 118.3 | 22.2 | 5.95 | 1.10 | 0.38 | 12.2 | T |
| 2 | The same results sorted | | | | | | 133.8 | 6.0 | 6.72 | 0.35 | 0.37 | 12.2 | S+P |
| 3 | by failure modes | | | | | | 108.0 | 23.9 | 5.43 | 1.17 | 0.39 | 12.3 | T |
| Tested wet | | | | | | | | | | | | | |
| 5 | 20 | 21 | 293 | 1.5d | | Poly | 106.7 | 8.2 | 5.52 | 0.47 | 0.40 | 17.0 | S+P |
| Two bolts in each end | | | | | | | | | | | | | |
| 6 | 20 | 21 | 295 | 1.5d | 3d | Poly | 203.8 | 12.8 | 5.24 | 0.36 | 0.40 | 11.8 | T |
| 6 | 20 | 21 | 290 | 1.5d | 2d | Poly | 168.5 | 22.9 | 4.41 | 0.62 | 0.38 | 11.6 | S+P+T |
| 3 | The same results sorted | | | | | | 182.7 | 21.1 | 4.80 | 0.57 | 0.40 | 11.1 | S+P |
| 3 | by failure modes | | | | | | 154.3 | 16.4 | 4.01 | 0.42 | 0.38 | 12.0 | T |
| 6 | 20 | 21 | 204 | 1.5d | 2d | Poly | 147.2 | 14.3 | 5.47 | 0.51 | 0.35 | 12.4 | S+P+T |
| 3 | The same results sorted | | | | | | 154.7 | 17.0 | 5.70 | 0.63 | 0.35 | 12.3 | S+P |
| 3 | by failure modes | | | | | | 139.8 | 7.5 | 5.23 | 0.30 | 0.35 | 12.4 | T |

Glue types

According to table 3.3 it appears that the polyurethan glue resulted in larger strengths than the more brittle araldit AW 139. This is specially pronounced when comparing only results of S+P failure modes, where the level of significance is less than 1.2 o/oo.

The magnitudes of max $\tau$ are similar to those reported in /Edlund, 1975/ for the same glue types. Further the results in /Riberholt, 1977/ for bolts bonded with resorcinol glue are similar to the araldit values. The stiff and brittle glues, araldit and resorcinol, result in pull out strenghts 15-25 percent smaller than those for polyurethan.

Edge distance

The results show that for edge distances equal to 1.5d, tension failure in the wood occurred frequently, while this was not the case for edge distances larger than 2d. But the failure modes also depend on the glued length.

Whether or not tension failure will take place depends on the tension stress in the wood cross section behind the rod. If the stresses were below the characteristic tension strength for glulam L40, 27 MPa, as given in the Danish timber code, then tension failure did not occur. The specimens with 12 mm rods are an exception, because they never failed in a wood tension rupture even though the tension stress was approximately 40 MPa. But they were made of thin laminations of dense wood with small knots.

By comparing polyurethan glued specimens with $l_g = 300$ mm approx., failure mode S+P and with $a_e = 1.5d$ or 2d it can be seen that the difference between the max F values 123.3 MPa and 119.3 MPa is not significant. Apparently the same tension strength of the bonded connection is obtained with both edge distances, i.e. an edge distance of 1.5d is thus sufficient to secure full strength. This is further emphasized by estimating the result for $d = 20$, $l_g = 190$, $a_e = 1.5d$ and polyurethan, where the mean of max F is 85.0 kN. By using the regression formula developed later in this chapter the following values 123.3 kN, 119.8 kN and 84.8 kN can be estimated in the three cases.

An edge distance of 1.5d, where d is the outer diameter of the threaded rod, is thus sufficient to obtain the full strength of the very bonded connection. But the strength of the wooden cross section may be insufficient, and this may require an increase in the edge distance.

In between distance

Based on the multiple regression, which is described later , the following values of the max. shear stress $\tau_{estim.}$ can be estimated.

This value $\tau_{estim.}$ is valid for the weakest of two bolts, but the test specimens had $2 \cdot 2 = 4$ bolts. These were loaded with equal loads so the failure load corresponds to the weakest of the four bolts.

In this case it can approximately be shown that the mean values of max $\tau$ are interrelated as follows

$$\max \tau_{1 \text{ bolt}} = \max \tau_{2 \text{ bolts}}/(1-0{,}54 \cdot \text{coef.var.})$$

$$\max \tau_{4 \text{ bolts}} = \max \tau_{1 \text{ bolt}} \cdot (1-\text{coef.var.})$$

So the weakest link factor between results from $2 \cdot 1 = 2$ bolts and $2 \cdot = 4$ bolts becomes

$$k_{2 \text{ to } 4} = (1-\text{coef.var.})/(1-0{,}54 \cdot \text{coef.var.})$$

$$= 0{,}95$$

where coef.var = 0,1

The estimated and corrected max $\tau$ values are given in table 3.4 together with the measured ones.

Table 3.4 Estimated and measured values of max $\tau$

| d | $d_h$ | $l_g$ | $a_e$ | $a_b$ | Max $\tau$, MPa | | |
|---|---|---|---|---|---|---|---|
| mm | mm | mm | | | Estimated | Measured | Ratio |
| 20 | 21 | 295 | 1.5d | 3d | 5.43 | 5.24 | 0.97 |
| 20 | 21 | 290 | 1.5d | 2d | 5.46 | 4.80 | 0.88 |
| 20 | 21 | 204 | 1.5d | 2d | 5.52 | 5.70 | 1.03 |

There is a reasonable agreement between the estimated and measured values of max $\tau$. So there is no strength reducing interference between the stress fields around the rods, even when they are spaced as close as 2d.

Diameter, gluing length and density

This report desists from setting up a theory from which the max pull out force can be calculated from geometry, stiffness and so on. But based on theoretical considerations it is reasonable to make a multiple regression with the following different sets of parameters in the expression for max F.
The parameters are chosen under the assumption that the distances to edge and other bolts are equal to the minimum distances. If

the distances are larger it is expected that the pull out strength will increase a bit.

Table 3.5 Feasible regression parameters and formulae

| Parameters | R-square for polyurethan specimens |
|---|---|
| $d_h \sqrt{l_g}$ dens | 0.930 |
| $d_h \sqrt{l_g}$ dens, dens | 0.940 |
| $d_h \sqrt{l_g}$, $l_g/d_h$, dens | 0.941 |
| $d_h \sqrt{l_g}$ dens, $l_g/d_h$·dens, dens | 0.941 |
| $d_h \sqrt{l_g}$ dens, $l_g/d_h$·dens | 0.933 |

The statistical analysis has been carried by the standard program SAS. It can be seen that the correlation is good and that the differences in R-square are small.

The estimation of the parameters was based on results where either tension failure in the wooden cross section did not occur, or the value of max $\tau$ was more than 6.0 MPa or 5.5 MPa for polyurethan and araldit specimens respectively.

For polyurethan specimens the measured strengths have been compared with predicted values, and it is found that the top most regression formula fits the results best. Considering physical conditions it is also one of the best.

For both polyurethan and araldit specimens the regression formulae have been given in table 3.6.

Table 3.6 Regression formulae. Dimensions:
F: kN, $d_h$: mm, $l_g$: mm, dens: specific density

| | | |
|---|---|---|
| Polyurethan: | $F = -9.4 + 0.834 \cdot d_h \sqrt{l_g} \cdot \text{dens}$ | (3.1) |
| Araldit: | $F = 3.5 + 0.237 \cdot d_h \sqrt{l_g}$ | (3.2) |

For Araldit specimens a regression analysis has also been carried out. Due to the fact that the glued length in both cases is approximately 15 · d the results are not well suited to establish a correlation between the pull out force and the glued length. The expression in table 3.6 is the simplest with the highest coefficient of correlation (R-square = 0.948).

Another way of estimation would be to utilize the previous reference result for the two glue types, i.e. that the pull out force of a araldit specimen is 80 percent of that of a polyurethan specimen. This results in the following estimate of the pull out force for Araldit glued bolts

$$F = -7.5 + 0.667 \cdot d_h \sqrt{l_g} \cdot dens \qquad (3.3)$$

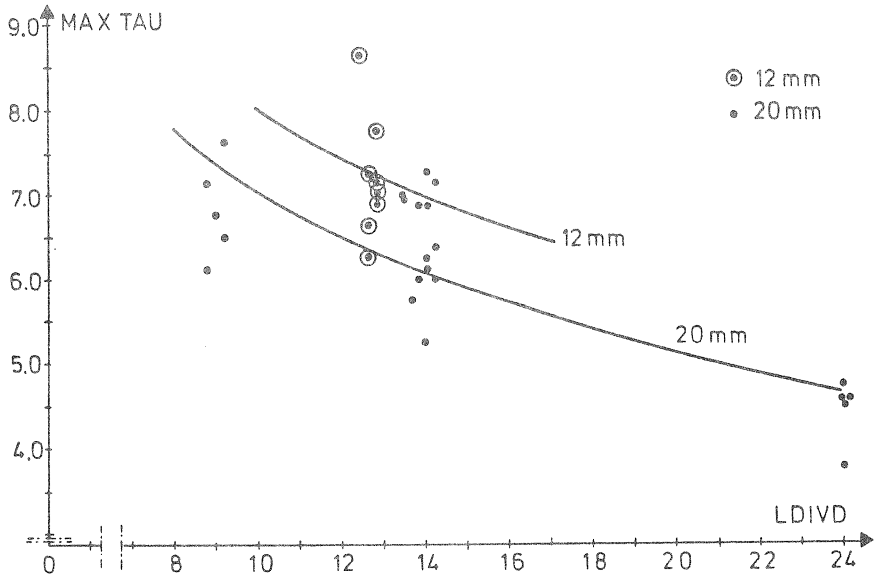


Figure 3.6A Measured and estimated values of max $\tau$ for both diameters versus the glued length divided by the hole diameter. Polyurethan specimens.

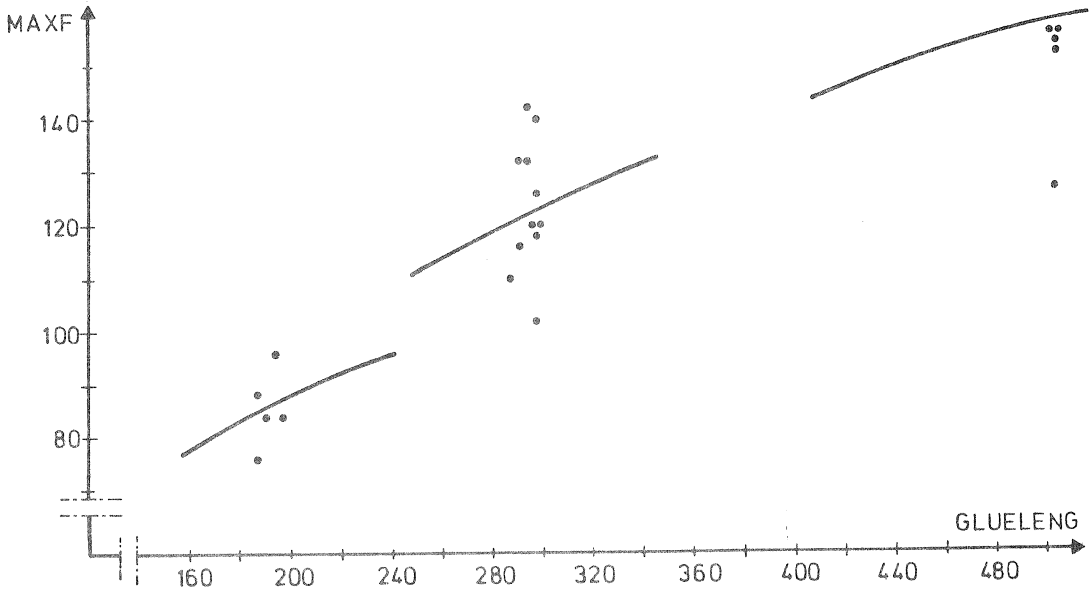


Figure 3.6B Measured and estimated values of max F for 20 mm bolts versus the glued length. Polyurethan specimens.

In figure 3.6 the results for polyurethan specimens are shown together with the estimated strength curves. Max $\tau$ is shown for

all basic specimens without sleeves, and which just have been short term tested. The mean value of the specific density 0.42 was used for the estimation of max $\tau$. For max F the mean value of the specific density of each group of specimens was used.

In figure 3.7 some typical force-deformation curves are drawn. The curves give the relation between the force in the rod and the relative displacement between the rod and the end grain. The fixing point at the end grain was spaced at different distances from the bolt depending on the size of the wood specimen. This is the reason why the curves of specimens with an edge distance of 1.5d appear to be stiffer than those with an edge distance of 2d or 2.5d.

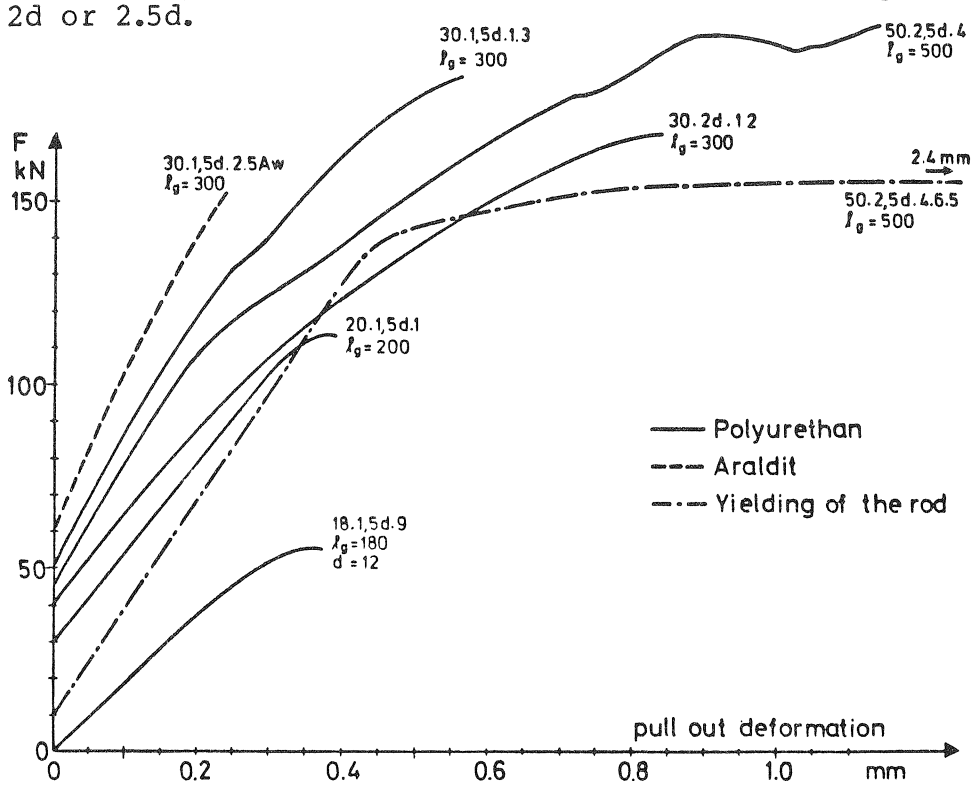


Figure 3.7 Typical force-deformation curves for glued bolt connections with a diameter of 20 mm, and one curve with a diameter of 12 mm.

Further, figure 3.7 shows that:

Araldit glued bolts have a more brittle rupture than polyurethan glued bolts.

The connection becomes more ductile with increasing glued length.

When the connection fails due to yielding of the rod the force-deformation relation becomes even more ductile.

Yielding of the rod

In 2 of the 5 specimens failure was caused by a tension failure in the rod outside the glued length. The tension failures in the rod occurred at a force close to the previously found pull out strength.

Reinforcement by plywood sleeves

Table 3.3 shows that plywood sleeves glued to the end grain counteract splitting of the wood. Failure is not caused by tension perpendicular to the grain. Instead failure took place in the wooden cross section, where the mean value of the tensile strength was 40 MPa.

The measured mean value of $F_{max}$ was 128.8 kN, whereas the estimated value was 112.2 kN, according to previous results without sleeves.

Since the failure allways was a tension failure in the wood it can thus be concluded that the sleeves at least have increased the pull out strength by 15 percent.

Moisture and moisture variations

Table 3.7 contains a comparison of the test results and estimated values of max F for specimens which have been exposed to cyclic pressure impregnation and subsequent drying. The testing was a short term test.

Table 3.7 Measured and estimated values of max pull out force

| | Specimens tested | Values of max pull out force | | |
|---|---|---|---|---|
| | | Measured | Estimated | Ratio |
| Without plywood sleeves | Dry | 114.6 | 111.0 | 1.03 |
| | Wet | 88.4 | 103.0 | 0.86 |
| With plywood sleeves | Dry | (133.8) | | (1.13) |
| | | 118.3 | 118.6 | 1.00 |
| | Wet | 106.7 | 126.8 | 0.84 |

For specimens without plywood sleeves the estimation was based on the formula in table 3.6. For specimens with sleeves 15 percent was added.

For two specimens with sleeves and tested dry there was found very high pull out forces in those cases where the failure modes were splitting and pull out. Since it is only two specimens of five the mean value of the five has been chosen.

It can thus be concluded that three moisture variations between

12 to 35 percent overall

12 to 18 percent in the core of the specimen

do not reduce the pull out strength when tested dry. But when the specimens are tested wet a reduction of 15 percent in the short term strength has been observed.

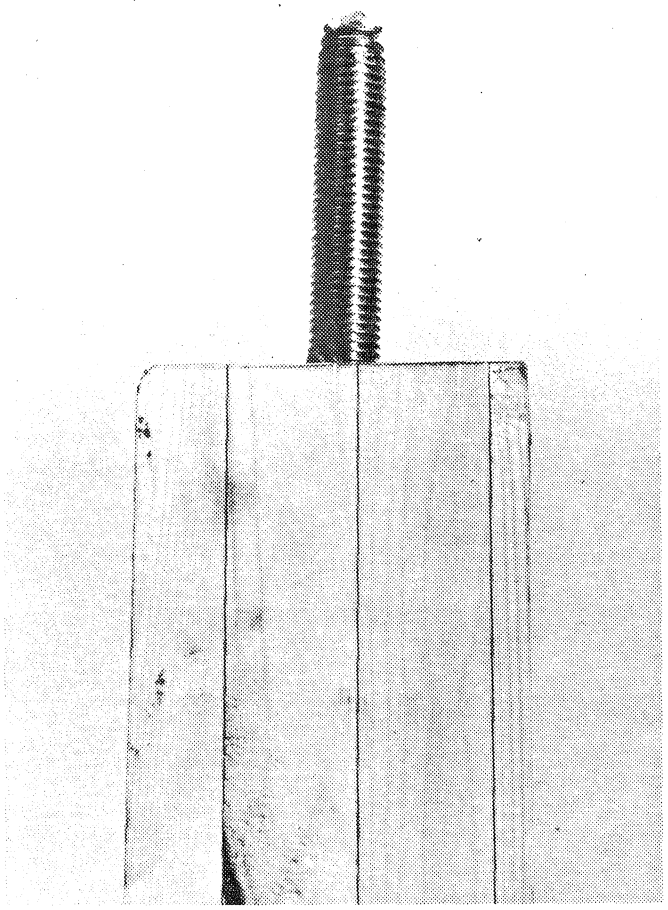

## 4. AXIAL LONG TERM LOADING

This chapter deals with the effect of sustained loading combined with variations of the moisture content.

The tension force was applied to the glued bolt connections in bending tests in order to avoid a large demand for weights. Due to the curvature of the relative small specimen some bending in the rod occurred. This will cause tension stresses perpendicular to the grain of a not negligible magnitude which might reduce the pull out strength.

### 4.1. Object

It was the object to expose glued bolt connections to a sustained tensile force combined with variations in the moisture content of the same magnitude as can be found in outdoor structures.

### 4.2. Test specimens, their treatment and loading

Specimens under controlled climate

These tests were part of the final year project of Michael Ginnerskov.

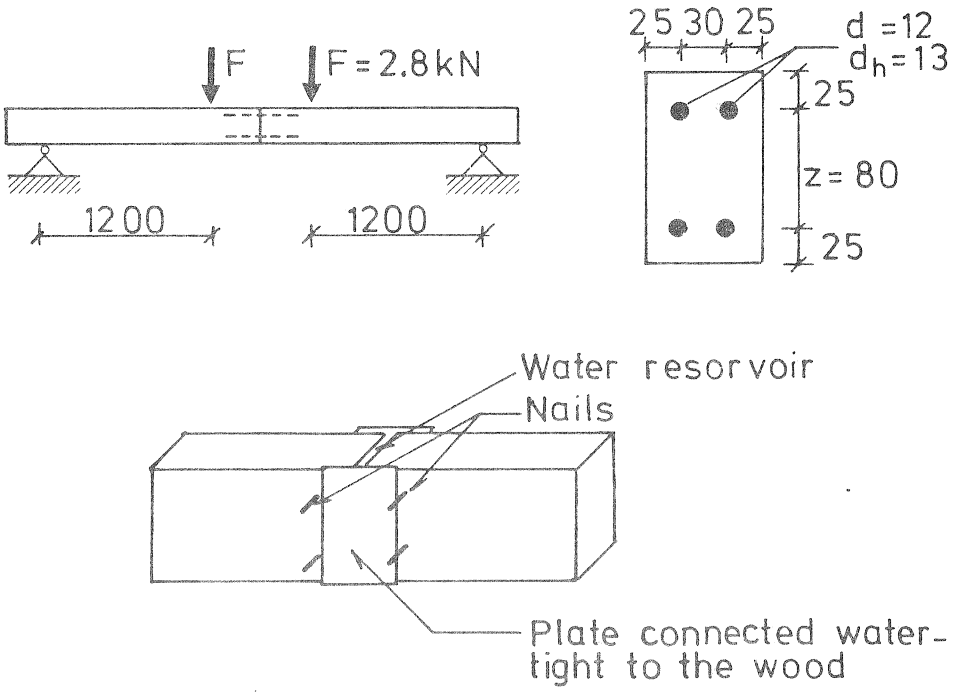


Figure 4.1 Dimensions, design and loading of specimens under controlled climate.

Six specimens were produced with moment stiff connections, three of each glue type. Their dimensions are given in figure 4.1. The treaded rods had a diameter of 12 mm and the holes were drilled with a diameter of 13 mm. The glued length was 240 mm.

The specimens were placed in a climate chamber. It was the intention to increase the moisture content by means of a high air humidity, but the increase occurred too slowly. So after 3 weeks occurred another procedure was chosen.

There was a spacing of approximately 2 cm between the wood parts. After 3 weeks with sustained load a thin steel plate was connected watertight to the wood so that a reservoir was formed. During the wetting the reservoir was kept filled with water, and in this way a moisture content of 25 to 30 percents in the wood could be obtained.

From the begining the moisture content was approximately 9 percents, and this moisture content was also reached during the drying of the specimens. A heating fan was used to speed up the drying.

At the time of writing (7 months later) only the polyurethan glued specimens have survived. They have been exposed to: Wetting-drying-wetting, and they are presently being dried.

On each side of the specimens 4 nails were driven in at the same level as the rods. The distance between them was measured with a slide gauge with a precision of 0.05 mm.

Specimens outdoor

The specimens were not covered, but were exposed to sun and precipitation.

All specimens were glued with polyurethan glue. Three specimens were produced, no. I-III, of 6 half parts as shown in figure 4.2.

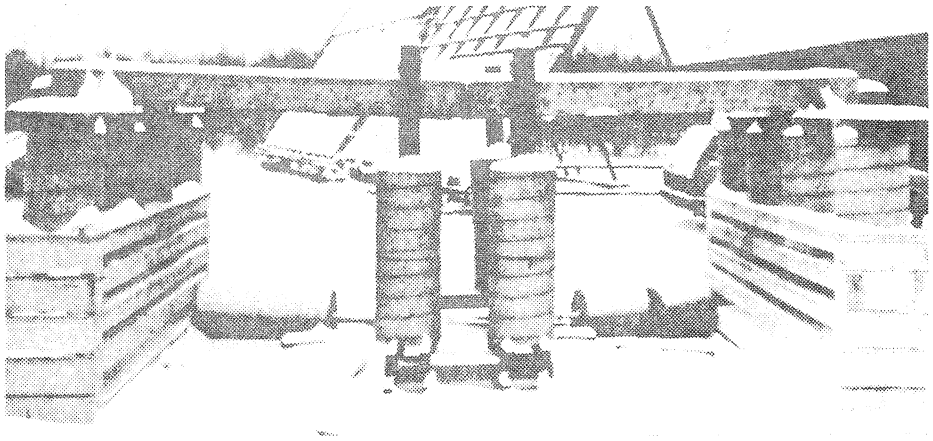

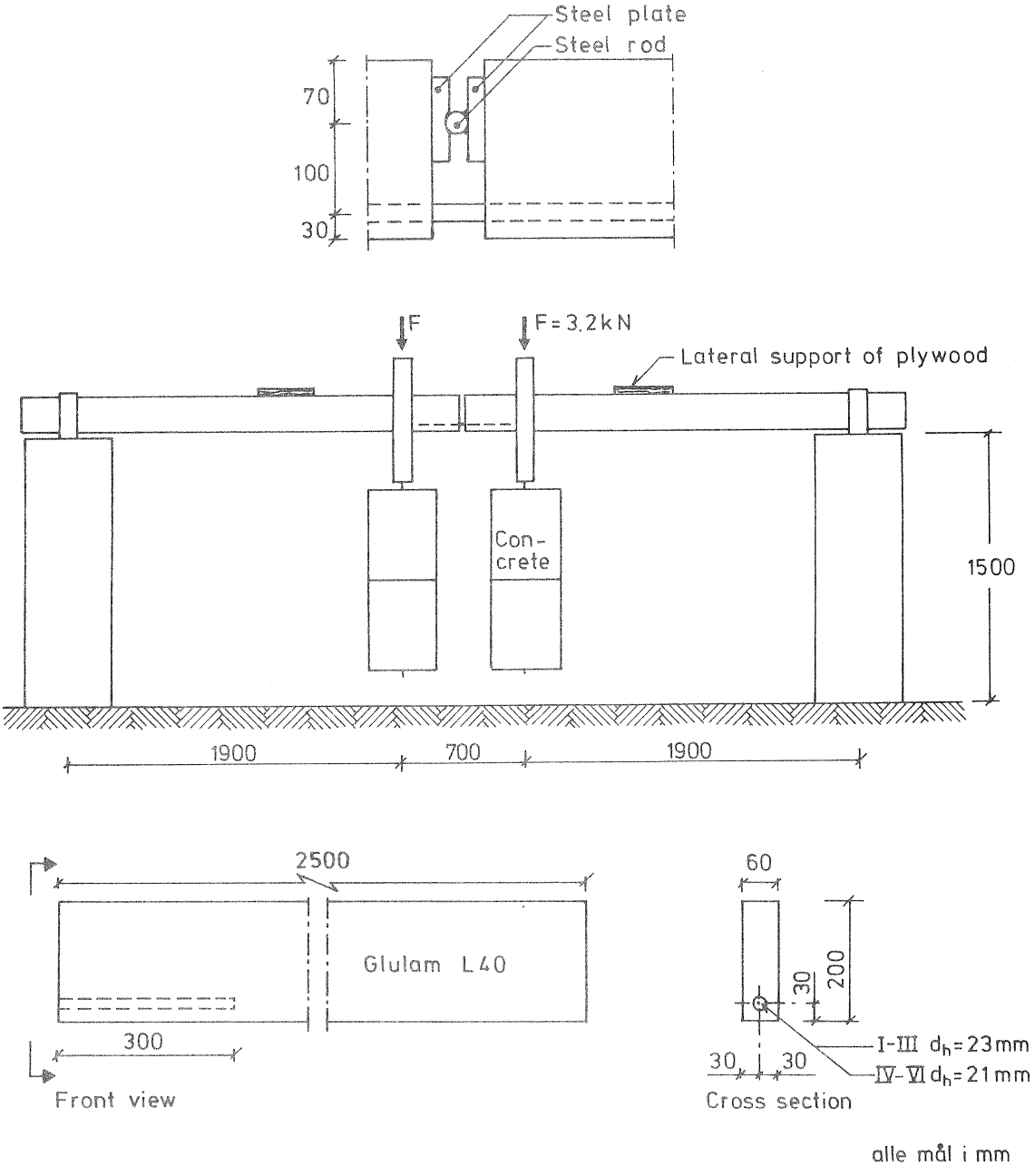


Figure 4.2 Outdoor specimens, dimensions design and loading.

The two glulam parts were held in a fixed position, while the threaded steel rod was glued into the glulam and the steel plates were glued to the end grain. In this way the parts fitted well together.

After failure of the three specimens the other end of the glulam parts was used to produce three more specimens, no. IV-VI. This was two months ago and they are still hanging.

The deformations between two fixed points on the top of the beams and on the bottom were measured with a mechanical extensometer with a presicion of 1/100 mm. The length between the points was 100 mm.

Specimens from March 1977

In /Riberholt, 1977/ long term tests are reported with threaded rods 16mm glued with resorcinol glue. The gluing length was 160 or 320 mm. They were exposed to a tension force of 60% or 75% of the short term strength and they were hanging in an indoor climate.

## 4.3. Results and discussion

Specimens under controlled climate

The mean value of the moisture content of the wood during the loading is shown in figure 4.3. Here the time of failure is also given.

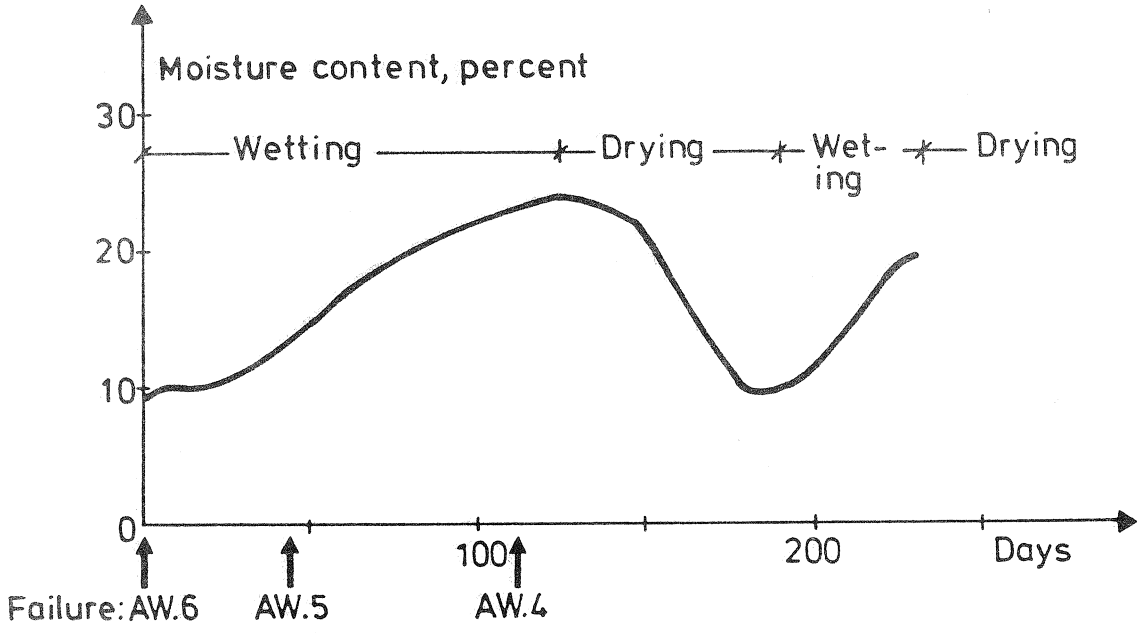


Figure 4.3 Moisture content of the wood during sustained loading and time of failure of araldit glued specimens.

The deformations between the nails are shown in figure 4.4. These deformations are approximately equal to double the pull out deformations shown in figure 3.7. If the deformation controls the failure, this should take place for a deformation of 2 · 0.35 = 0.7 mm approximately for polyurethan and 0.5 mm for araldit.

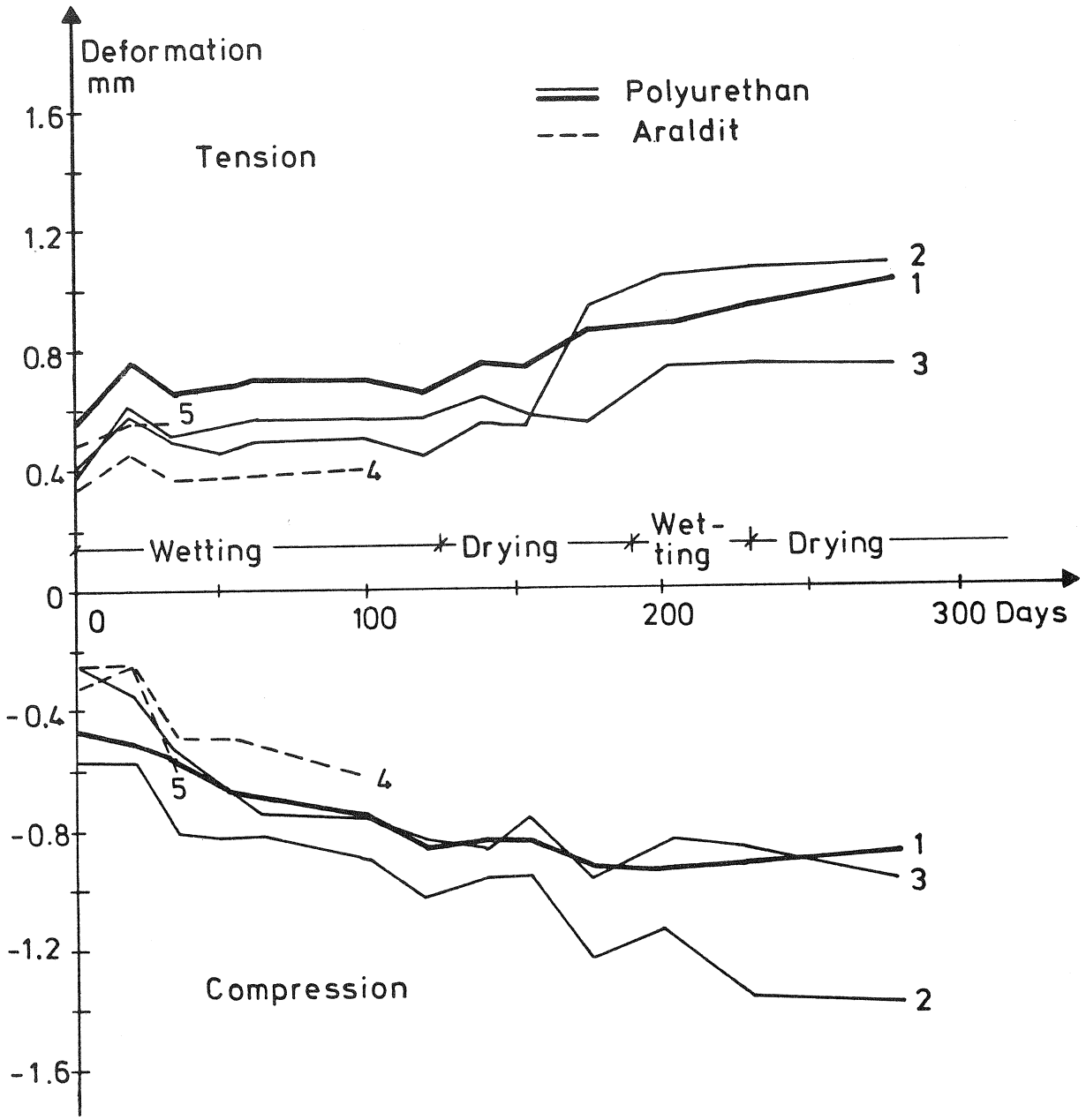


Figure 4.4 Deformation between fixed points on the glulam (nails) during sustained loading.

The polyurethan specimens exhibit a considerable creep deformation. After 200 days it is approximately equal to the short term deformation. Apparently the deformation appears mainly during drying. This is the same behaviour as for wood beams.

The sustained tensile force in the rods can be calculated to 21.4 kN. The araldit specimen AW.6 failed during the loading because of an incomplete glue injection. The glued length was only 50 mm. The other araldit specimens failed as written in table 4.1. The polyurethan specimens are still surviving the tensile force.

Table 4.1 Time of failure, sustained tensile force and estimated mean value of the dry short term strength.

| Glue type | Specimen | Time of failure, days | Tensile force, kN Sustained | Estimated | Ratio |
|---|---|---|---|---|---|
| Polyurethan | P.1<br>P.2<br>P.3 | Survives<br>240 | 21.4 | 49.4 | 0.43 |
| Araldit | AW.4<br>AW.5<br>AW.6 | 106<br>43<br>0 | 21.4 | 38.2 | 0.56 |

The estimated short term strengths for specimens with a moisture content of 11 percent are calculated from the formulae (3.1) and (3.3) for polyurethan and araldit respectively.

Specimens outdoor

The mean value of the moisture content has during the months September and October increased from 12 to 14 percent approximately.

The deformation between two fixed points on the wood at the level of the glued rods are shown in figure 4.5. The similar deformation at rupture at a short term test should according to figure 3.7 be $2 \cdot 0.6 = 1.2$ mm.

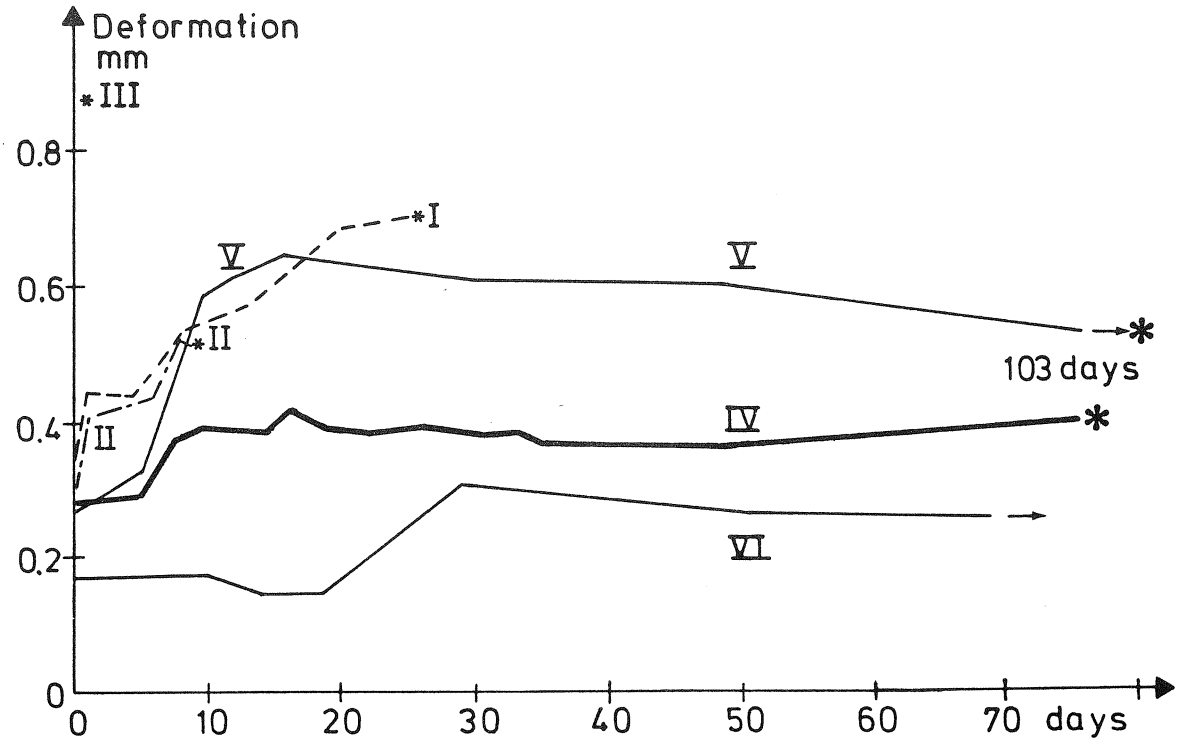


Figure 4.5 Deformation between fixed points on the glulam and spaced 100 mm.

The deformations are rather different for the different bolts. From figure 3.7 the initial deformation can be estimated to 2 · 0.18 = 0.36 mm, which is in the middle of the curves.

It can be seen that the specimens I to III failed relatively fast and at small deformations. An investigation showed that the glue did not bond to the steel. This indicates that the threaded rods had not been cleaned sufficiently. Further, the hole diameter = 23 mm was larger than normal (21 mm).

The specimens IV to VI are still carrying the tension force which can be calculated to 62.3 kN. Based on the formula (3.1) the short term strength of a dry specimen (12%) is calculated to 103 kN. The strength ratio 62.3/103 = 0,60 has thus been carried for 40 days.

Specimens from March 1977

The results are given in table 4.2.

Table 4.2 Load level and time of failure of resorcinol glued bolt connections in indoor climate

| d mm | lg mm | No. speci. | Load level percent | Time of failure days | | |
|---|---|---|---|---|---|---|
| 16 | 160 | 3 | 60 | No fail. | 3100 | 116 |
| | 160 | 3 | 75 | 3 | 53 | 10 |
| 16 | 320 | 3 | 60 | 490 | 360 | No fail. |
| | 320 | 3 | 75 | No fail. | 1 | 11 |

Conclusion

It can be concluded that for sustained tension force the polyurethan specimens seems to be superior to the araldit glued bolt connections.

Polyurethan glued bolt connections exhibit a creep deformation, which is at least equal to the initial deformation.

It appears that the long term axial pull out strength of glued bolts exposed to outdoor climate is approximately half the short term strength of dry specimens.

## 5. LATERAL LOADING

This chapter concerns the load carrying capacity of lateral loading glued bolt connections. Only short term tests have been carried out.

### 5.1. Object and theory

The object was to carry out tests which could be used to determine the embedding strength $f_e$ for glued bolts parallel to the grain. The following parameters were varied.

Minimum distances
Diameter
Reinforcement by plywood sleeves
Exposure to moisture cycles

The theory for the load carrying capacity is taken from /Riberholt, 1977/ and it is reproduced here.

It is assumed that the ultimate capacity occurs when the threaded rod is yielding and the contact stress between wood and rod has reached the embedding strength over a length $z$, see figure 5.1.

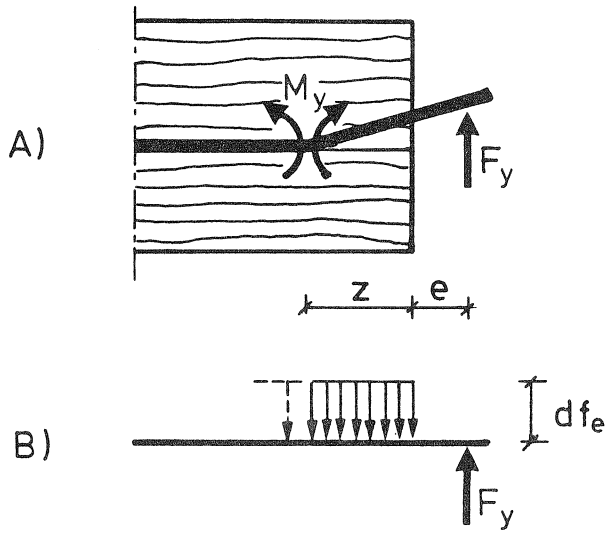


Figure 5.1 Stresses and forces on a lateral loaded glued bolt.

The maximum moment in the rod occurs where it yields, so here the shear force is zero. By equilibrium in the direction of the force and moment equilibrium at the yield hinge the following equations are obtained

$$F_y = z\ d\ f_e \qquad (5.1)$$

$$M_y = F_y(e + z/2) \tag{5.2}$$

By measuring the yield moment of the rod one can from these equations find the embedding strength and the yield hinge position

$$f_e = \frac{F_y}{2d\ (M_y/F_y - e)} \tag{5.3}$$

$$z = 2(M_y/F_y - e) \tag{5.4}$$

When the embedding strength has been determined the lateral load carrying capacity can be calculated from

$$F_y = df_e\left(\sqrt{e^2 + \frac{2M_y}{df_e}} - e\right) \tag{5.5}$$

Under similar assumptions it is possible from figure 5.2 to derive a formula for the embedding strength of a sleeve $f_{e,s}$ glued to the end grain. Here it is assumed that the yield moment of the rod and the embedding strength of the wood have been determined. The derivation is presented in /Ginnerskov, 1985/.

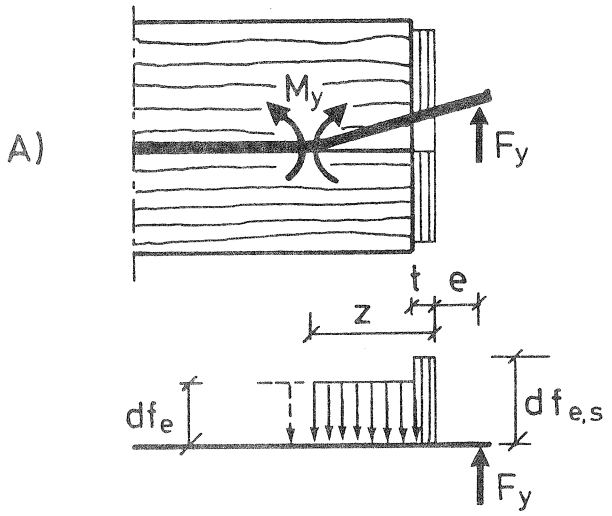


Figure 5.2 Stresses and forces on a lateral loaded glued bolt with a sleeve.

$$f_{e,s} = (F_y/d - 1/2(\sqrt{t^2 + 4k} - t)f_e)/t \qquad (5.6)$$

$$z = (t + \sqrt{t^2 + 4k})/2 \qquad (5.7)$$

where

$$k = \frac{2M_y - 2F_y e - t}{d\, f_e} \qquad (5.8)$$

For known strength values the lateral load carrying capacity can be calculated from

$$F_y = ((\sqrt{e^2 + k_s} - e - t)f_e + t\, f_{e,s})d \qquad (5.9)$$

where

$$k_s = 2M_y/(df_e) - t(2e + t)(f_{e,s}/f_e - 1) \qquad (5.10)$$

## 5.2. Test specimens and their treatment

The specimens were produced so that a threaded rod could be glued in at both ends. The dimensions of the specimens are given in figure 5.3 and table 5.1.

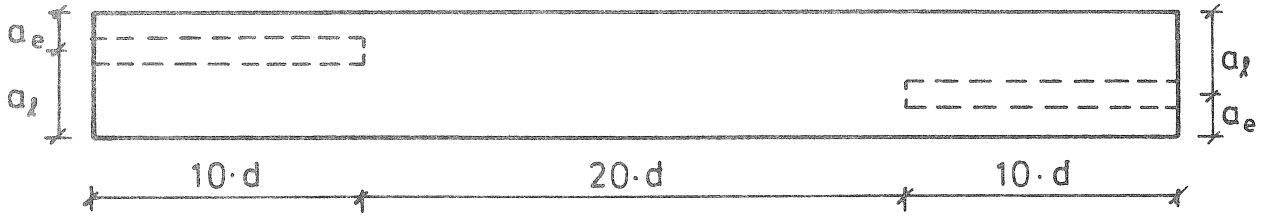


Front view of all specimens

Type 0:

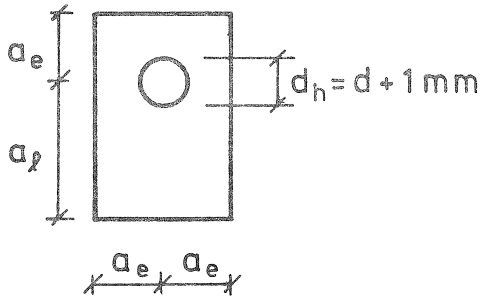


End section

Type 1:

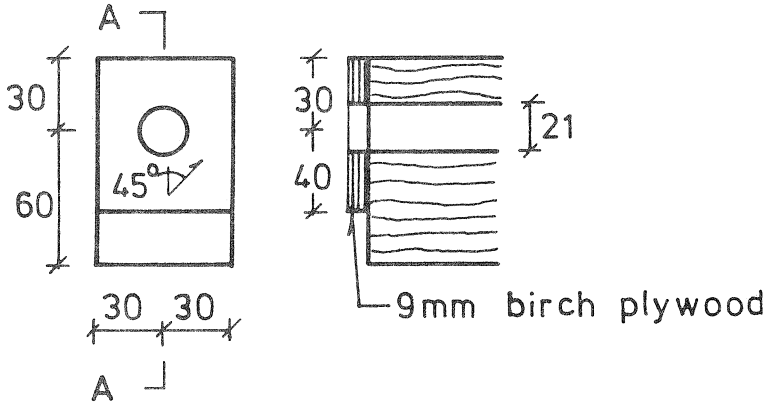


End section Section A-A

Type 2:

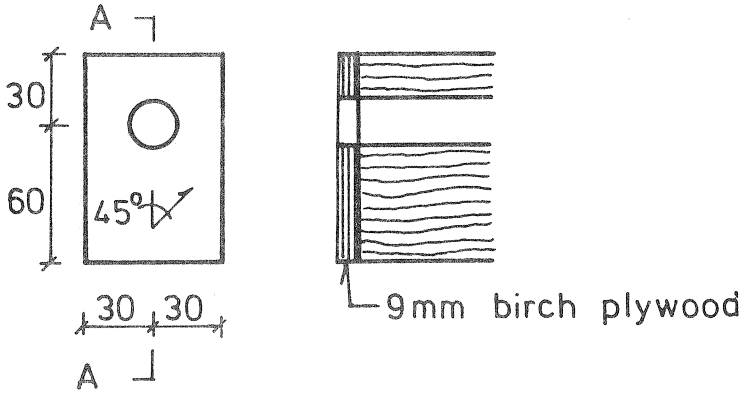


End section Section A-A

All dimensions in mm

Figure 5.3 Wood specimens for bolts loaded laterally. The threaded rods protruded 5d after they have been glued into the specimens.

Table 5.1 Dimensions and design of specimens for lateral load.

| Specimens type | Specimens No. | Rod diameter d mm | Edge distances to free edge $a_e$ mm | Edge distances to loaded edge $a_l$ mm | Comments |
|---|---|---|---|---|---|
| 0 | 5 | 20 | 40 | 80 | Basic specimens for short term tests |
| 0 | 3 | 20 | 30 | 60 | |
| 0 | 5 | 12 | 24 | 48 | |
| 1 | 4 | 20 | 30 | 60 | |
| 2 | 4 | 20 | 30 | 60 | |
| 0 | 5 | 12 | 24 | 48 | Exposed to pres. imp. and drying |
| 1 | 4 | 20 | 20 | 60 | |
| 2 | 4 | 20 | 30 | 60 | |

The quality of the rods was chosen to ISO 4.6, but the delivered rods had a higher yielding stress in bending. The yield moments were measured to 103 and 540 kNmm for M12 and M20 rods respectively. These yield moments include some strain hardening as it occurs in the connection.

It appears from table 5.1 that the edge distances were $a_e$ = 1.5 d or 2 d and to the loaded edge $a_e$ = 3 d or 4 d respectively.

Polyurethan glue was used for all the specimens.

Some test specimens were exposed to 3 cycles of pressure impregnation with a water based CCA solution and subsequent drying in a ventilated heating chamber at approximately 30°C. As for the tension specimens mentioned in chapter 3 this treatment resulted in a change of the overall moisture content between 12% and 35% and for the core between 12% and 18%.

On some test specimens 9 mm birch plywood sleeves were glued to the end grain. This should counteract splitting and increase the embedding strength in the most efficient section. Unfortunately, the sleeves were glued with a PVA glue, which for the pressure impregnated specimens resulted in a decrease in the efficiency of the sleeves.

The plywood sleeves were cut so that the fibre direction of the face veneer formed an angle of 45° with the edge. In this way the failure mode shown in figure 5.4 was counteracted. This failure mode occurred frequently in previous tests as reported in /Ginnerskov, 1985/. Here the angle was 0°.

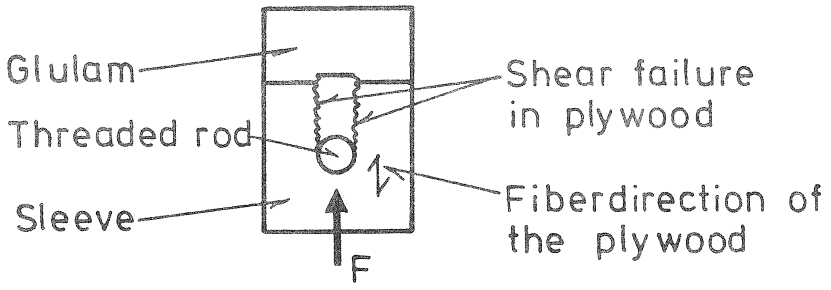


Figure 5.4 Shear failure in the plywood sleeve.

After the shear failure in the plywood the force dropped to a lower value and it could be increased again for larger displacements while the connection acted as one without a sleeve.

## 5.3. Test apparatus and testing

The lateral load was applied in a hydraulic universal testing machine, Mohr & Federhaff, with a capacity of 600 kN.

Figure 5.5 shows how the load was applied to the connection. The force $F_c$ acting on the connection was applied with an eccentricity (distance from end surface) of approximately 10 mm. The exact eccentricity was measured manually during the testing.

The displacement between the top of the glulam and a point in the middle of the nut was measured by means of two Hewlett Packard 7 DCDT 1000 extensometers. A load-displacement curve was plotted on a xy-plotter.

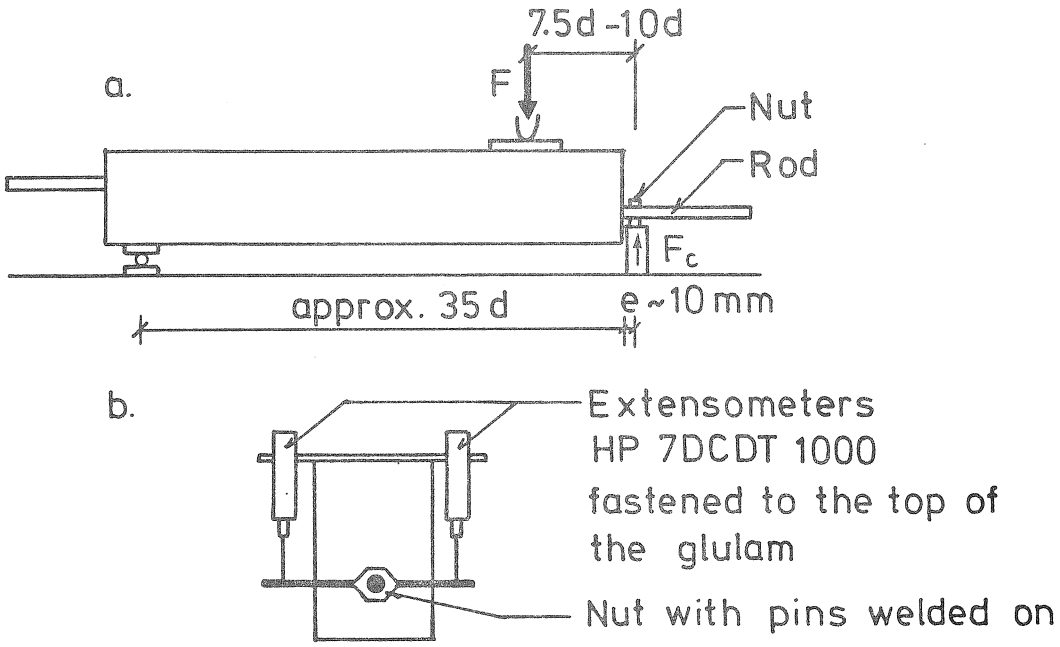


Figure 5.5 Loading arrangement and measurement of displacement rod/glulam.

Each end of the specimens were tested subsequently. The first end was not loaded to a complete rupture, but it was stopped for a relative displacement of 15 mm. In this way the specimen did seldom split during the testing of the first end.

The loading procedure described in the /RILEM/CIB-3TT-1 recommendation, Testing methods for joints with mechanical fasteners/ was used.

After testing bricks were cut out of the lamella above the rod. The density (dry weight/wet volume) and moisture content was measured by drying and weighing.

## 5.4. Results and discussion

From all the load-slip curves some typical ones are selected and shown in figure 5.6. The curves for 12 mm rods have a similar shape.

If the glued bolt had been part of a connection between two wood pieces one would have measured the double slip. So in order to be in accordance with /RILEM/CIB-3TT-1/ the load carrying capacity is defined as the maximum force within a max. slip of 7.5 mm.

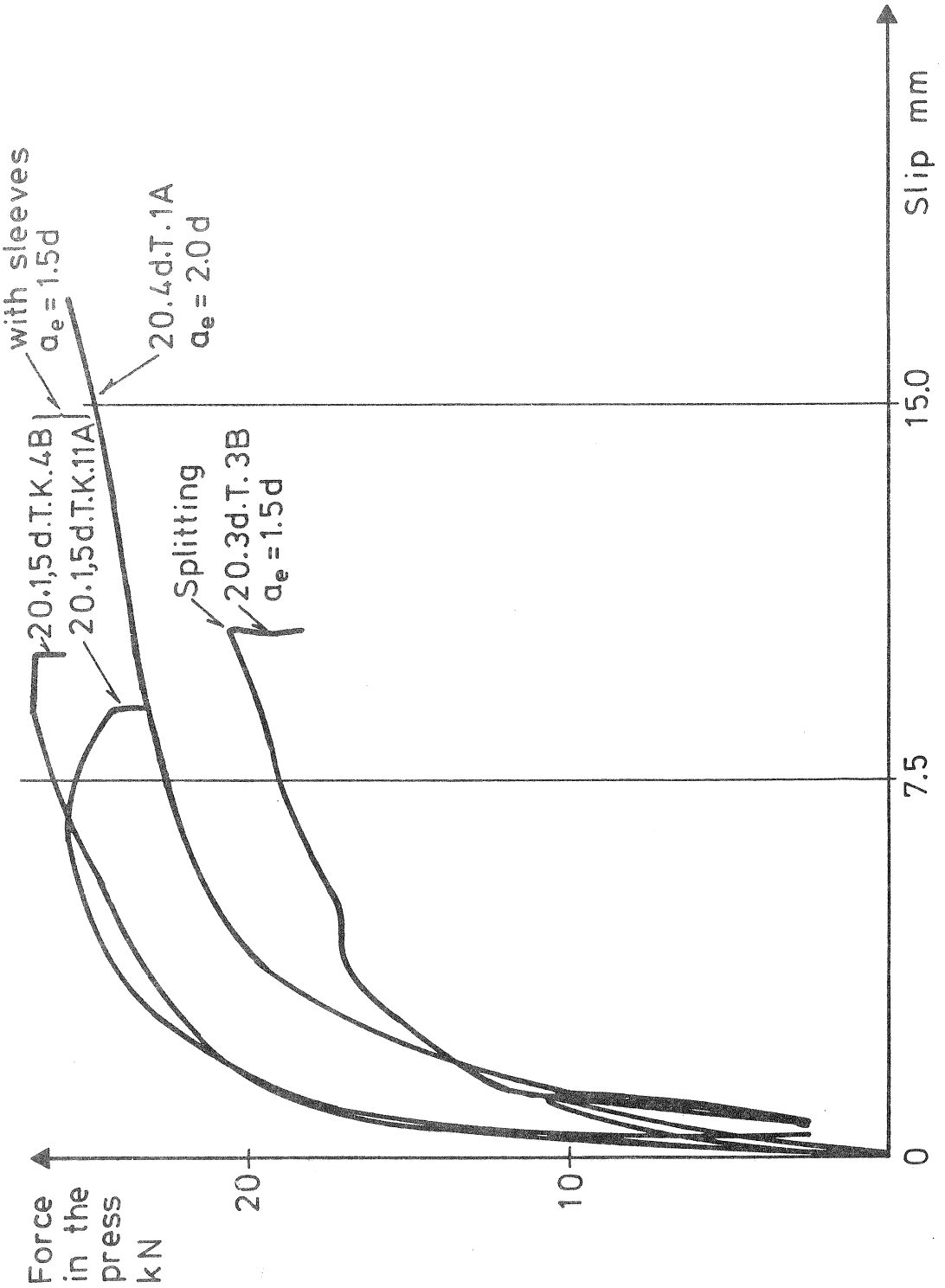


Figure 5.6 Typical load slip curves for glued threaded rods with an outer diameter of 20 mm

The detailed measurements and failure modes are given in enclosure 1. The results are listed in the same order as in table 5.1. Table 5.2 contains a summary.

Some of the headings in table 5.2 are defined as:

| | |
|---|---|
| No | Number of tested rods |
| d | Outer diameter of the rod |
| $d_h$ | Diameter of hole |
| Max $F_c$ | Max force on the connection |
| $f_e$ | Embedding strength of wood |
| $f_{e,s}$ | Embedding strength of birch plywood |

The failure modes were as listed below. The predominant ones are given in the table.

| | |
|---|---|
| S | Splitting of the wood |
| SF | Sleeve was torn off |
| SS | Shear failure (in plane) in the sleeve, see figure 5.4 |

Table 5.2 Results of lateral load tests.

| No | d | $d_h$ | $a_e$ or specim. | Max $F_c$ Mean | Max $F_c$ St.dev. | $f_e$ Mean | $f_e$ St.dev. | e | Spec. dens. | Moist. cont. | Domi. Fail. Mode |
|---|---|---|---|---|---|---|---|---|---|---|---|
| | mm | mm | type | kN | kN | MPa | MPa | mm | | % | |
| Different edge distances and diameters | | | | | | | | | | | |
| 6 | 20 | 21 | 1.5d | 15.6 | 1.6 | 15.0 | 3.3 | 9.5 | 0.42 | 13.1 | S |
| 10 | 20 | 21 | 2d | 14.5 | 1.1 | 13.0 | 2.4 | 10.2 | 0.41 | 12.2 | |
| 8 | The same results | | | 14.7 | 1.2 | 13.3 | 2.6 | 10.4 | 0.41 | 12.2 | No S |
| 2 | sorted by fail.mode | | | 14.1 | 0.8 | 11.6 | 1.5 | 9.5 | 0.43 | 11.9 | S |
| 10 | 12 | 13 | 2d | 5.78 | 0.51 | 24.3 | 6.7 | 8.4 | 0.40 | 12.3 | No S |
| Exposed to pressure impregnation and drying | | | | | | | | | | | |
| 10 | 12 | 13 | 2d | 4.26 | 0.33 | 9.7 | 1.9 | 7.1 | 0.41 | 19.0 | No S |
| | | | | | | $f_{e,s}$ | | | | | |
| Reinforced by birch plywood sleeves | | | | | | | | | | | |
| 7 | 20 | 21 | type 1 | 19.9 | 0.5 | 40.3 | 4.0 | 10.4 | 0.44 | 12.8 | |
| 3 | The same results | | | 20.3 | 0.1 | 42.7 | 1.4 | 10.3 | 0.45 | 12.9 | SS |
| 4 | sorted by fail.mode | | | 19.7 | 0.5 | 38.5 | 4.6 | 10.5 | 0.43 | 12.7 | No SS |
| 8 | 20 | 21 | type 2 | 17.9 | 1.0 | 28.6 | 5.3 | 10.8 | 0.41 | 13.0 | No SS |
| Reinforced by birch plywood sleeves and exposed to pres.imp. and drying | | | | | | | | | | | |
| 8 | 20 | 21 | type 1 | 12.3 | 1.5 | 3.9 | 6.7 | 9.3 | 0.46 | 16.3 | SF |
| 8 | 20 | 21 | type 2 | 14.2 | 2.5 | 14.3 | 17.4 | 9.4 | 0.46 | 16.2 | SF |
| 2 | The same | | | 17.0 | 2.9 | 32.2 | 19.0 | 10.5 | 0.47 | 16.0 | No SF or SS |
| 5 | results sorted | | | 13.1 | 1.8 | 8.2 | 15.1 | 9.0 | 0.46 | 16.3 | SF |
| 1 | by fail.mode | | | 13.6 | | 9.3 | | 9.0 | 0.39 | 15.9 | SS |

## Edge distance

With regard to specimens without plywood sleeves it can be seen from table 5.2 that with an edge distance of 1.5d the predominant failure mode is splitting of the wood specimen. This is not the case with an edge distance of 2d. On the other hand a little higher strength of specimens has been measured with $a_e$ = 1.5d than for $a_c$ = 2d. But splitting is a brittle failure mode.

For specimens with plywood sleeves it is sufficient with an edge distance of 1.5d when the specimen is of type 2, i.e. with a full covering sleeve.

The edge distance in the direction of the applied force will be the double, i.e. 4d or 3d for specimens without or with plywood sleeves.

## Embedding strength

The embedding strength depends on the diameter of the rod. A linear regression gives the following formulae with R-SQUARE = 0.56

$$f_e = 41.4 - 1.32 \cdot d_h \quad \text{MPa} \tag{5.11}$$

where the dimension of $d_h$ is mm.

Several kinds of linear regression have been carried out in order to establish a coherence between the embedding strength and density, moisture content and diameter. But the test results did not allow reasonable regression formulae. The formulae resulted for example in negative embedding strength for a moisture content of 20% and a diameter of 21 mm.

For the 12 mm rods 3 cycles of pressure impregnation and subsequent drying resulted in a decrease of the embedding strength and an increase in the moisture content at testing. The following summary demonstrates this.

| | Moist. content | $f_e$ MPa | Relative $f_e$ |
|---|---|---|---|
| Dry | 12.3 | 24.3 | 100% |
| Press. impreg. | 19.0 | 9.7 | 40% |

The best estimate of the embedding strength at a moisture content u is thus

$$f_{e,u} = 24.3 \cdot (1 - 0.09 \cdot (u - 12.3))$$

$$= 24.3 \cdot (2.1 - 0.09 \cdot u) \text{ MPa} \qquad (5.12)$$

where $u$ is given in percent.

The moisture correction factor (2.1 - 0.09 u) is also suggested employed for other rod diameters.

It must here be emphasized that the moisture correction factor is determined within the moisture limits 12 and 19%. For example it predicts zero strength at a moisture content of 23.3%.

It can thus be concluded that the mean value of the embedding strength of the wood can be estimated from (5.11) and (5.12)

$$f_e = (41.4 - 1.32 \cdot d_h)(2.1 - 0.09 \cdot u) \text{MPa} \qquad (5.13)$$

where $d_h$ Hole diameter in mm
$u$ Moisture content in percent, $12\% < u < 19\%$

In /Riberholt, 1977/ an embedding strength of 21.8 MPa is found. 16 mm rods was tested bonded with resorcinol glue in wood with a moisture content of 11 percent. From equation (5.13) an embedding strength of 22.5 MPa can be calculated for this case.

Further, it is relevant to compare the predicted embedding strength from equation (5.13) with the characteristic values for bolts in wood given in /CIB, Timber Code, 1983/ for load perpendicular to the grain. Moisture content = 12 percent, spec. density = 0.44.

Embedding strength, MPa

| Hole diameter | Eq. (5.13) | CIB, bolts |
|---|---|---|
| 13 | 24.7 | 19.1 |
| 21 | 14.0 | 16.4 |

Reinforcement by plywood sleeves

From table 5.2 it can be seen that the reinforcement by plywood sleeves results in an increase of the load carrying capacity of approximately 10%. Further, this increase is obtained with an edge distance of only 1.5d.

The values of the embedding strength $f_{e,s}$ of the birch plywood sleeves found from the equations (5.6), (5.8) and (5.13) are for dry specimens significantly higher than those for the wood. The mean value of all dry specimens is 34.1 MPa.

The above value of $f_{e,s}$ is found for birch plywood with a fibre angle of 45° with the force direction. In /Ginnerskov, 1985/ there has been found a similar load carrying capacity for the fibres parallel to the applied force. So the embedding strength of the plywood do not depend very much on the angle between force and fibre.

For the specimens exposed to pressure impregnation the plywood sleeves were torn off in almost all the cases, because the employed PVA glue had lost its bond-capability. Only two specimens did not fail in this way, and for these a mean value of $f_{e,s} = 32.2$ MPa was found. This indicates that pressure impregnation/drying only causes a slight reduction in $f_{e,5}$ which just as well can be explained by the fact that the tests were carried out at an elevated moisture content.

On this background it seems reasonable to estimate the mean value of the embedding strength of birch plywood sleeves from equation (5.14). This is expected to give conservative values for a moisture content $u$ above 13 percent

$$f_{e,s} = 34 \cdot (2.1 - 0.09 \cdot u) \quad \text{MPa} \qquad (5.14)$$

# 6. MOMENT STIFF COLUMN-FOUNDATION JOINTS

In this chapter a theory of the strength of a column-foundation joint subjected to combined (N,V,M) has been set up. The theory has been verified by tests.

The load-carrying capacity of the joint can be illustrated by the fact that the mean value of the bending stress in a similar hypothetic column would have been 31 MPa. The characteristic bending strength of L40 glulam is 40 MPa.

## 6.1. Object and theory

It was the object to set up a theoretical description of the behaviour of the moment stiff joint and to verify it by tests.

### Theory for a pure bolt joint

The theory is applicable to a joint where the load is transferred only by the glued bolts. The theory consider the forces $(N, V_y, V_z)$ and the moments $(M_y, M_z)$.

It is assumed that the deformation between the two connected parts can be described by 3 translations and 2 rotations, i.e. rigid body deformations.

Further, it is assumed that the glued bolt connection behaves linear elastic - ideal plastic. See for example figure 3.7.

Figure 6.1 shows the investigated joint of glued bolts of equal size.

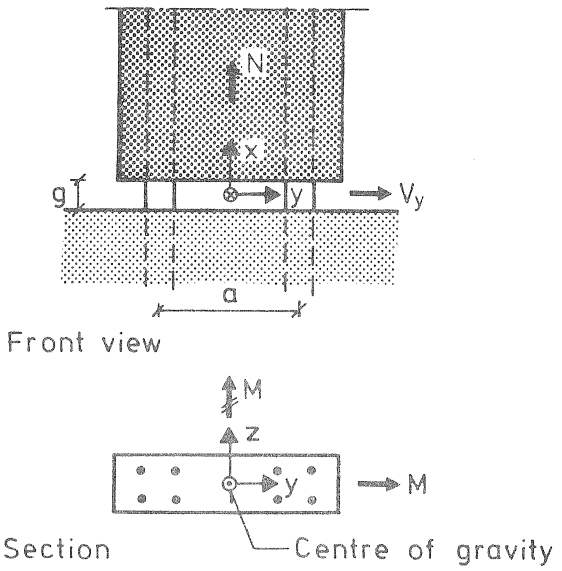


Figure 6.1 Moment stiff joint with glued bolts alone.

From these assumptions it can be shown that in the linear elastic range the forces in the bolts can be found from

$$F_{ax} = N/n + M_y/I_y \cdot z - M_z/I_z \cdot Y \qquad (6.1)$$

$$F_{lat,y} = V_y/n \qquad (6.2)$$

$$F_{lat,z} = V_z/n \qquad (6.3)$$

Where $F_{ax}$ is the axial force in a glued bolt connection

$n$ is the total number of glued bolts

$I$ is the moment of inertia for the y- and z-axis. For example $I_y = \sum_{1}^{n} z^2$

$F_{lat}$ is the lateral force in the y- or z-direction

When the compressed bolts enter the plastic range then they fail due to the combination of compression force, bending moment and second order column effect. The bolts in tension are in a more favourable situation because the lateral force can be transferred by tension in the inclined bolts.

Meanwhile, if the bolts are put in two groups as in figure 6.1, and the applied forces are $(N, M_z)$, then the axial force in the bolts can be found from

$$F_{ax} = N/n + 2\, M_z/n\, a \qquad (6.4)$$

where $a$ is the distance between the centres of gravity for each bolt group.

This equation is correct if the bolts exhibit some plastic behaviour. Further, it gives approximately the same result as equation (6.1) for two spaced bolt groups, even if they behave linear elastic.

Theory for a joint with bolts and tamped mortar

If the joint is to be analyzed under service load, or if the glued length is too short to secure yielding in the bolts, then a linear elastic theory should be employed. It can here be utilized that compression stresses can be transferred to the tamped

mortar, if this does not shrink during the hardening.

The report deals with the common case, where in the moment stiff joint there is tension force in one of the bolt groups and compression in the other. Further, it is assumed that the anchorage of the bolts is sufficient to secure yielding of these. Figure 6.2 shows the forces and stresses, which are very similar to the situation in reinforced concrete.

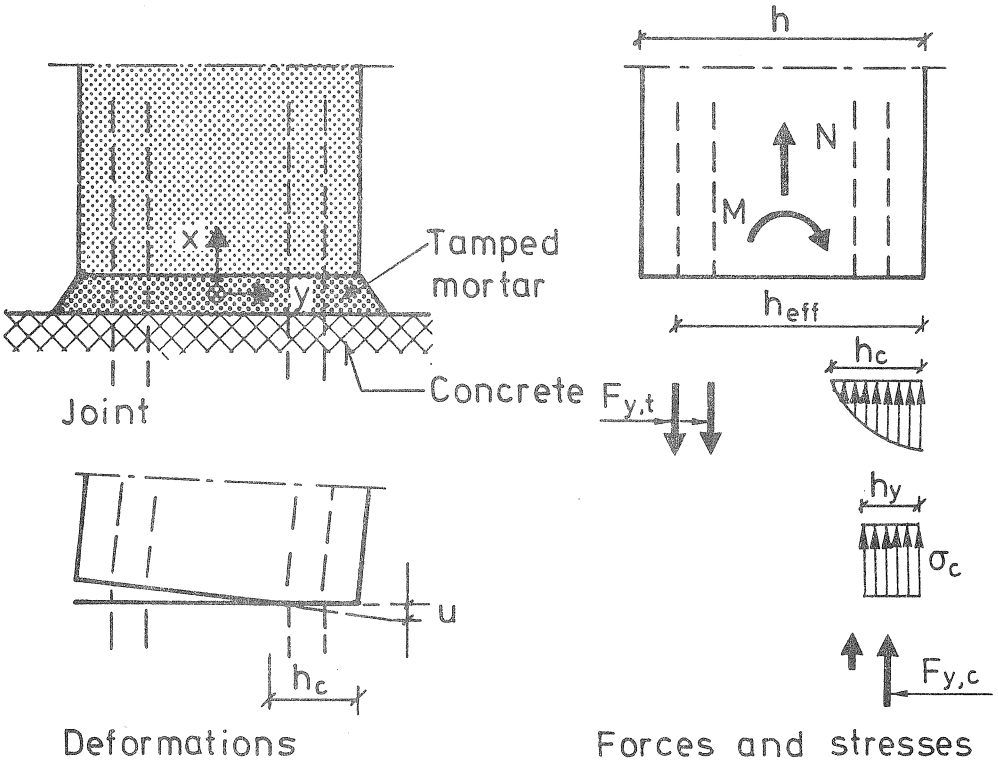


Figure 6.2 Moment stiff joint with glued bolts and tamped mortar.

It is assumed that the load-slip behaviour of the tensile bolts determines the crack width $u_t$ between the mortar and the end grain at the outer bolts. In the compressed zone it is assumed that at the failure limit there is a certain compression $u_c$. There will thus be contact stresses (compression) over a height $h_c$, which is determined by the stiffness of the glued bolt connections, the mortar and the surrounding structure. As an approximation it can be determined from tests as a proportion of the effective height $h_{eff}$.

As for reinforced concrete the distribution of the contact stresses can be simplified further by assuming that they are constant over the height $h_y$, where $h_y$ is given by

$$h_y = 0.8\ h_c \qquad (6.5)$$

On the safe side the compressed bolts can be disregarded. But they can also be taken into account by calculating the compression at each bolt position and determine the force in the bolt from the load-slip curve. This can for example be the idealized load slip curve shown in figure 6.3. The mutual slip in the linear elastic part can be calculated from formula (6.6), which has been calibrated to the measured deformations at short term tests.

$$u = 6 \cdot 10^{-6} \cdot l_g \cdot \sigma_{rod} \qquad (6.6)$$

where $u$ mutual slip between 2 wood parts /mm/

$l_g$ normal stress = $F_{ax}/A_{stress}$ in the rod, /MPa/

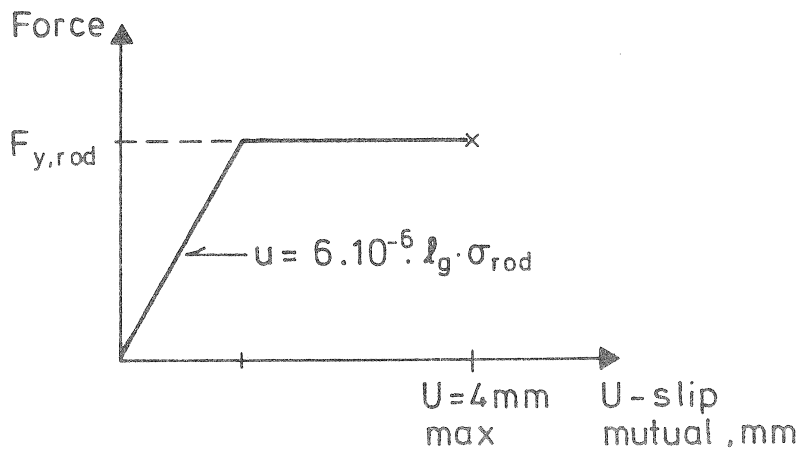


Figure 6.3 Idealized load-slip curve for axially loaded glued bolts. Mutual slip between 2 wood parts.

The maximum mutual slip in tension should not be set higher than 4 mm, which is among the largest recorded values.

With the assumptions mentioned above it is possible to set up equations, so that the load carrying capacity can be determined.

## 7. TRIMMER JOINT

Glued bolts are judged useful to trimmer joints, see figure 7.1. The advantages are: High load-carrying capacity, invisible connectors which are protected against fire.

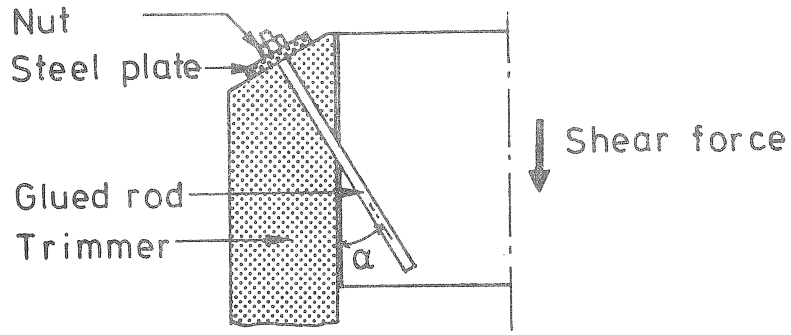


Figure 7.1 Trimmer joint with glued bolt.

It has been investigated whether there is an optimum angle of inclination $\alpha$ for the glued rod, but no such optimum has been found. As long as $\alpha < 38^0$ it appears that the joint has a reasonable design.

Several rods can be glued in, either on top of or beside each other.

### 7.1. Object and theory

It was the object to set up a simple theoretical description of the load-carrying capacity of a trimmer joint and to verify it.

In figure 7.2 the assumed stress distribution of a trimmer joint is shown in the case where it is subjected to a shear force V.

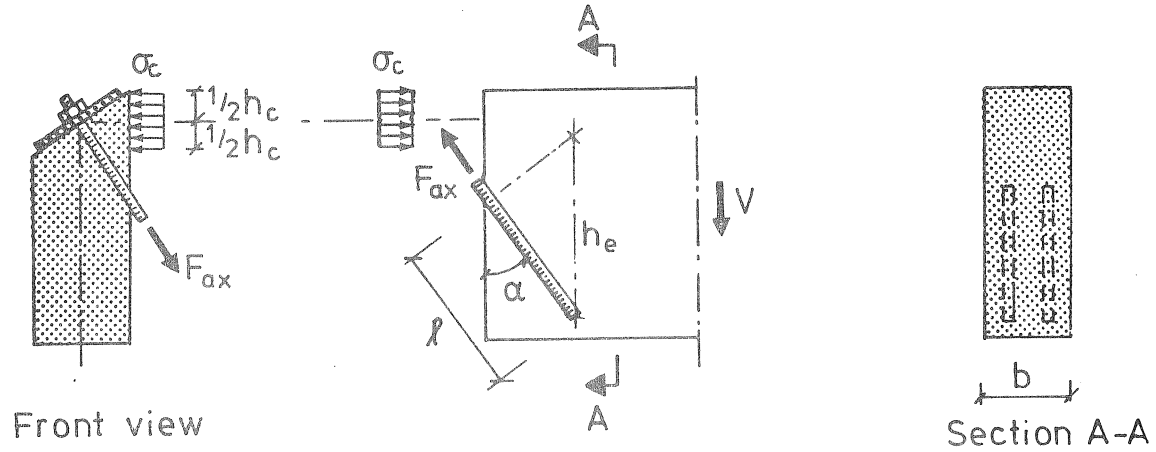


Figure 7.2 Design of trimmer joint. Internal stresses and forces.

The axial force in the rods can be found from the shear force V and the number of rods n.

$$F_{ax} = V/(n \cdot \cos\alpha) \tag{7.1}$$

This must be less than the axial yielding force and the pull-out strength of the rod.

The axial force $F_{ax}$ and the resultant of the contact pressure should intersect at the middle of the trimmer beam.

The steel plate must be of a size and thickness so that $F_{ax}$ can be distributed over a sufficiently large area. The plate area $A_{pl}$ and the contact area $a \cdot h_c$ between the wood parts has to fullfil

$$A_{pl} > F_{ax}/f_{c,90} \tag{7.2}$$

$$bh_c > V \cdot tg\alpha/f_{c,90} \tag{7.3}$$

Further a shear failure may occur in the bottommost part of the beam carried by the trimmer. An investigation of this failure mode can be done with the following inequality.

$$V < 2/3 \cdot bh_e f_v \tag{7.4}$$

The height $h_e$ is shown in figure 7.2 and it is equal to $1/\cos\alpha$. The height $h_e$ should define the sheared area.

## Conclusion

The simple model appears to describe the test results well and there is agreement between the predicted and the experimentally found failure modes.

## 8. FRAME CORNER

The main idea was to develop a frame corner in which two straight glulam beams could be connected moment stiff on site. Since gluing on site requires special precautions it was desired to glue in the bolts at the glulam manufacturer and to assemble the frame corner mechanically on site.

The design and testing of a frame corner joint started during the final year project of Michael Ginnerskov. He tested 6 corner joints in which the glued length of the rods was so short that yielding did not occur. So the glued bolt connection was rather brittle which resulted in splitting and failure loads considerably below what was predicted by a theory which assumed a certain plastic and ductile behaviour.

During the first 6 tests small alterations were introduced in order to counteract the brittle behaviour. Further, in the 3 tests of this project the middle section of the rods was milled down so that the yielding force of the rod should be below the pull out force.

But the improvements did not fully result in failure loads in accordance with the theoretically predicted. The partial brittle behaviour of the joint prevented a full utilization of the axial strength of all bolts.

So the design of the employed fitting cannot be recommended. In the last section improved joint designs are proposed, and it is expected that they may secure a considerably better utilization of the axial strength of the bolts.

Anyhow, with the employed design of the frame corner there was obtained capacities which in a hypothetic beam would have caused edge stresses in the range of 28-38 MPa.

### 8.1. Object and theory

It was the object to design a moment stiff frame corner connection which may be assembled mechanically on site. Further, it was wished to set up a theoretical description of the behaviour of the joint and to verify it by tests.

The design proposed is shown in figure 8.1, where it is adapted to the tested specimens.

Further, it was wished to investigate how ductile the glued bolt connection should be in order to secure a full utilization of the axial strength of all bolts in a connection.

## Theoretical description

In the following a description is given of the static behaviour close to failure of the joint shown in figure 8.1.

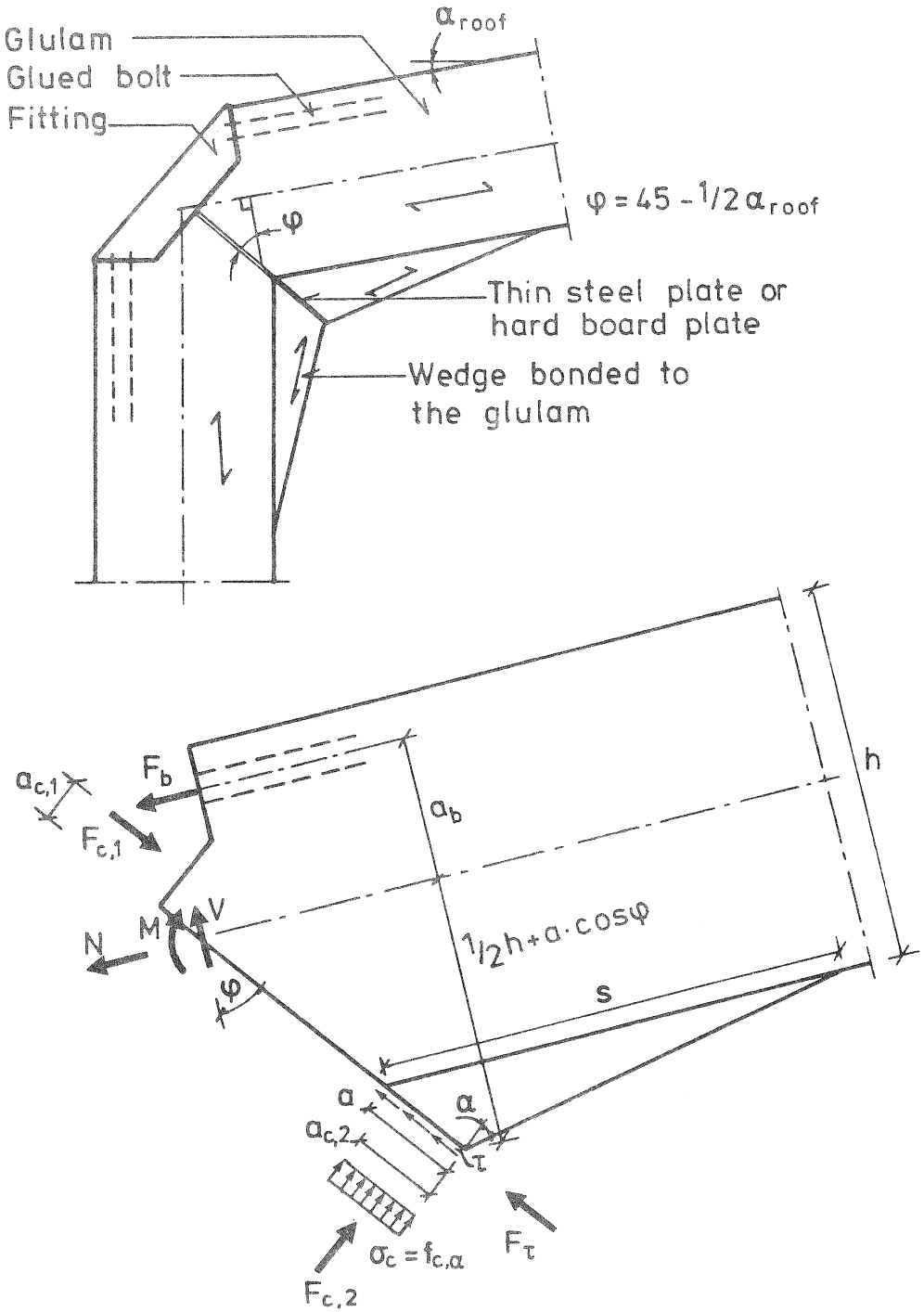


Figure 8.1 Shows the assumed forces in the joint together with the geometry.

Table 8.3 Calculated total bolt force in a group of 4 at failure and the capacity.

| Type | no. | Force in press kN | Calculated total bolt force kN | Capacity due to: Pull out kN | Yielding kN |
|---|---|---|---|---|---|
| I | 1 | 56 | 156 | 400 | 410 |
| | 2 | 58 | 163 | 400 | 410 |
| | 3 | 61 | 176 | 400 | 410 |
| II | 1 | 116 | 145 | 400 | 410 |
| | 2 | 124 | 160 | 400 | 410 |
| | 3 | 132 | 167 | 400 | 410 |
| III | 1 | 64 *) | 182 | 375 | 255 |
| | 2 | 65 | 184 | 399 | 255 |
| | 3 | 60 | 167 | 423 | 255 |

*) Failure caused by shear in the wedge.

It can be concluded that the full capacity of the bolts could not be utilized because of:

Uneven force-distribution in the rods combined with insufficient yielding capacity of the employed glued bolt connection.

Splitting at the topmost bolts caused by the outward deformations of the steel fitting.

## 8.4. Modified design of frame corner

In order to obtain a full utilization of the axial strength of the bolt connections, they must be provided with so large glued lengths that they yield before they are pulled out.

Further splitting due to an outward deformation of the fitting must be avoided. The frame corner shown in figure 8.10 should secure this

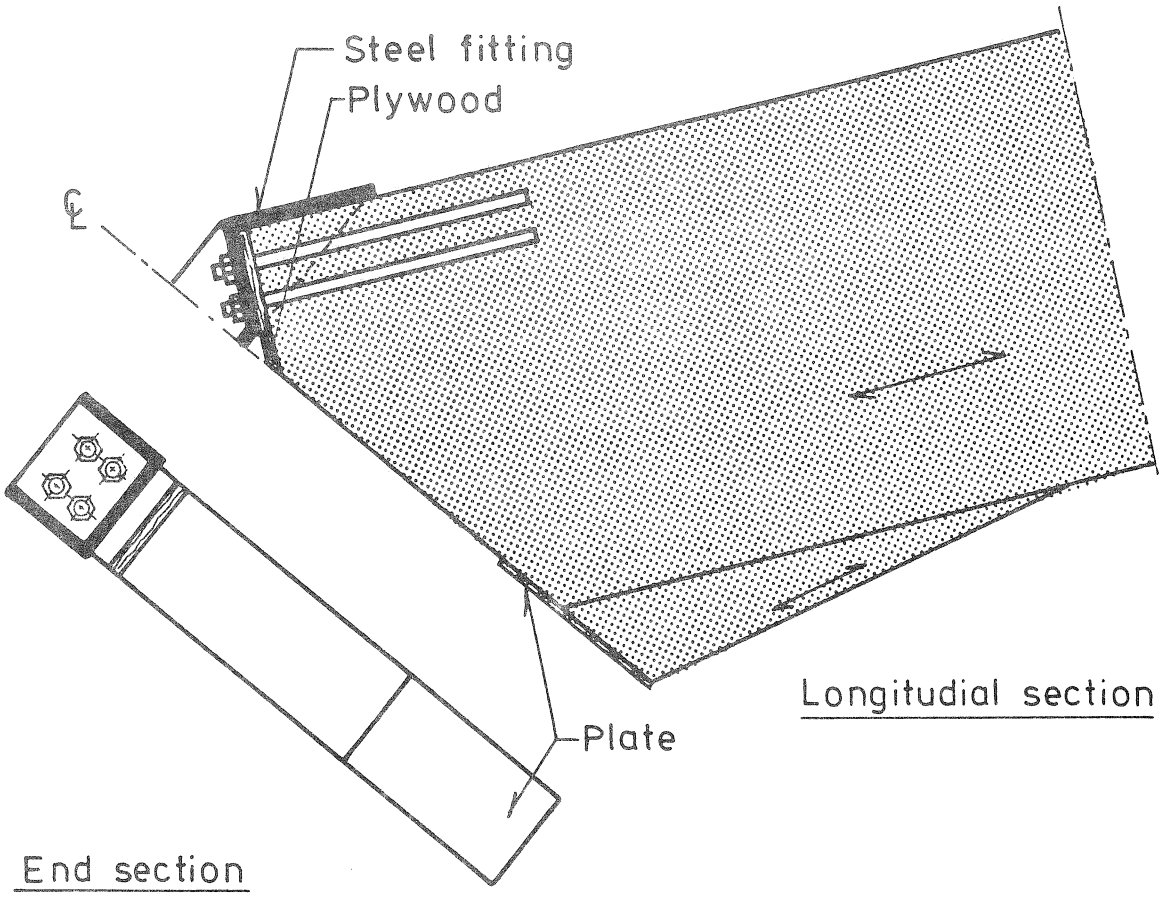


Figure 8.10 Improved design of frame corner.

## 9. SPLITTING OF LATERALLY LOADED GLULAM BEAMS

Glued bolt connections are often used for suspension of loads at the underside of the beam. In this case there is a risk of splitting of the glulam beam.

### 9.1. Object

It was the object to carry out tests where axial loaded bolts are being glued into the under side of a glulam beam in order to reveal the risk of splitting.

Further, it was the intention to support or reject the inequality below which often are applied to joints with mechanical fasteners in order to check the risk of splitting.

$$V < 2/3\ f_v\ h_e\ t \qquad (9.1)$$

where

| | |
|---|---|
| $V$ | Shear force produced by the fasteners |
| $f_v$ | Shear strength |
| $h_e$ | Effective height |
| $t$ | Thickness of beam |

### 9.2. Test specimens, instrumentation and loading

#### Specimens

It was chosen to use a simple supported beam loaded in the middle by two glued bolts. Figure 9.1 shows the dimensions of the glulam specimen of the quality L 40.

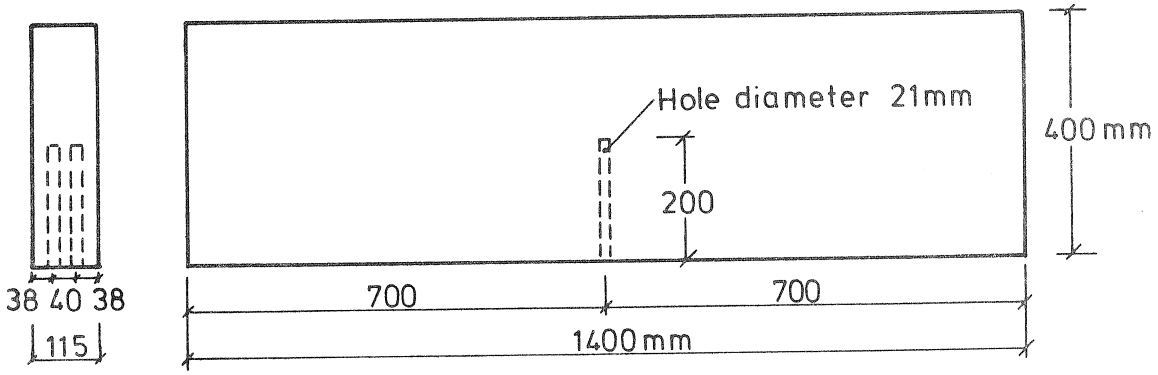


Figure 9.1 Glulam specimen before threaded rods are glued in.

Threaded rods with a diameter of 20 mm and of quality ISO 4.6 were bonded with polyurethan glue.

## Instrumentation

On both rods two extensometers of the type HP 7 DCDT-1000 were mounted, see figure 9.2. Hereby the deformation between rod and wood surface could be measured as for the bolts glued in parallel to the fibres.

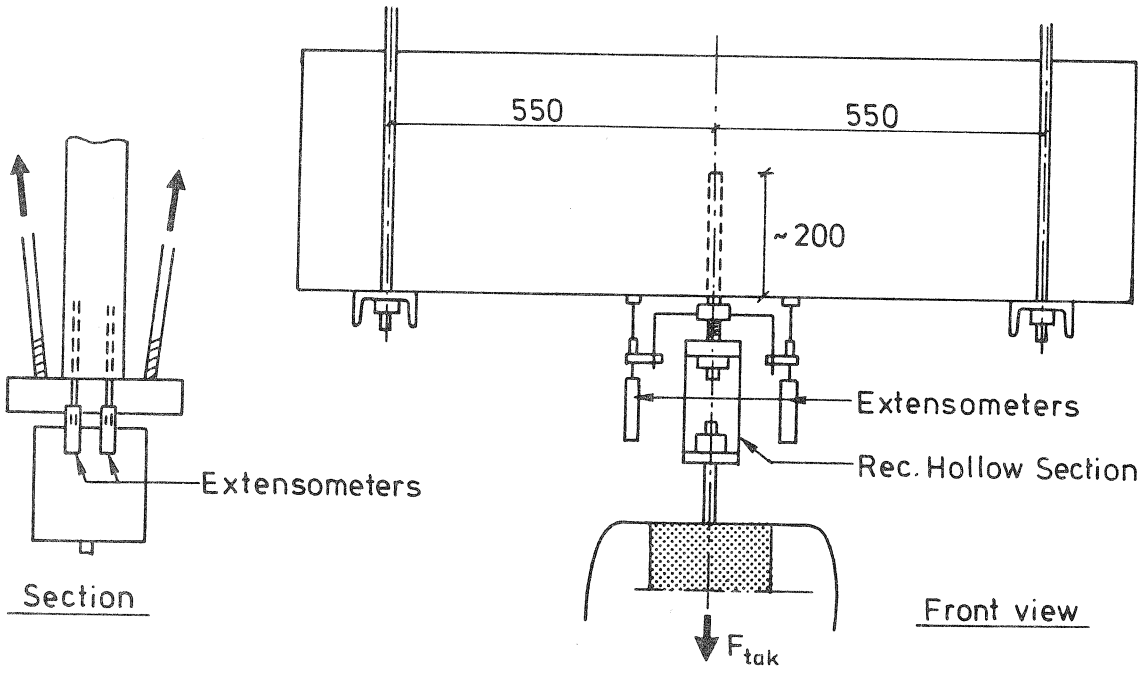


Figure 9.2 Extensometers and loading of the two bolts.

## Conclusion

It seems that the inequality (9.1) often employed can be used to check the risk of splitting in glulam beams. The effective height $h_e$ is to be determined from the end of the glued bolt.

Literature

CIB, 1983. Structural timber design code. CIB Report, publication 66.

Edlund, Gunnar 1975. I limträ inlimmad skruer. Svenska Träforskningsinstututet, Serie B nr. 333.

Feldborg Nielsen, T. and Johansen, Marius. 1970. Forsøg med træforbindelser med bolts og mellemlæg (Investigation of timber joints with bolts and connectors). Statens Byggeforskningsinstitut, SBI-rapport 67.

Ginnerskov, Michael 1985. Indlimede bolte i limtræ. Eksamensprojekt ved ABK.

Riberholt, H. 1977. Bolte indlimet i limtræ. Dept. of Struc. Eng., Tech. University of Denmark. Report 83. (German version: Eingeleimte Gewindstangen, 1978, Rapport 99).

Riberholt, H. 1984. Limtræmasts forskydningsstyrke. ABK-rapport serie S no. 8422.

RILEM/CIB-3TT-1, 1979. Testing methods for joints with mechanical fasteners in load-bearing timber structures.

CIB-W18/19-7-3

INTERNATIONAL COUNCIL FOR BUILDING RESEARCH STUDIES AND DOCUMENTATION

WORKING COMMISSION W18 - TIMBER STRUCTURES

# EFFECTIVENESS OF MULTIPLE FASTENER JOINTS ACCORDING TO NATIONAL CODES AND EUROCODE 5 (DRAFT) -

by

G Steck
University of Karlsruhe
Federal Republic of Germany

MEETING NINETEEN
FLORENCE
ITALY
SEPTEMBER 1986

# Effectiveness of multiple fastener joints according to national codes and Eurocode 5 (draft)

The design rules in some national codes for multiple fastener joints with nails, bolts and dowels resp. are given in Table 1 and Fig. 1.

In Fig. 2 and Fig. 3 resp. the EC 5 design rules are compared with the most unfavourable (effectiveness $\eta$ very low) and most favourable ($\eta$ = 1,0) design rules of Table 1.

The big differences

- emphasize the conclusions in CIB-paper 18-7-3
- show the need of further research.

References

SMITH, I and G STECK: Influence of Number of Rows of Fasteners or Connectors upon the Ultimate Capacity of Axially Loaded Timber Joints. CIB-W18, Beit Oren, June 1985.

Drafting Panel EC 5: Eurocode 5 (draft); Common Unified Rules for Timber Structures, 1986.

Table 1: Design rules in national codes for multiple fastener joints

| Country | | Code | NAILS Number n | NAILS Effectiveness $\eta = n_{ef}/n$ | Notes | BOLTS/DOWELS Number n | BOLTS/DOWELS Effectiveness $\eta = n_{ef}/n$ | Notes |
|---|---|---|---|---|---|---|---|---|
| A | Austria | ÖNorm 4100, Teil 2 08/1981 | $n \leq 10$<br>$10 < n \leq 20$<br>$n > 20$ | 1,0<br>0,9<br>0,8 | | $n \leq 6$<br>$n > 6$ | 1,0<br>6/n | only for dowels |
| AUS | Australia | AS 1720-1975 | $n < 5$<br>$5 \leq n < 10$<br>$10 \leq n < 20$<br>$n \geq 20$ | 1,0(1,0)<br>0,94(0,90)<br>0,90(0,80)<br>0,85(0,75) | ( ) MC > 15 % | $n < 5$<br>$5 \leq n < 10$<br>$10 \leq n < 15$<br>$15 \leq n < 16$<br>$n \geq 16$ | 1,0(1,0)<br>1,0(0,95)<br>1,0(0,80)<br>1,0(0,55)<br>1,0(0,50) | prefabricated, dry timber<br>( ) MC > 15 % |
| CAN | Canada | CAN 3-086 M84 | | 1,0 | | | see Fig. 1 | |
| CH | Switzerland | SIA 164-1981 | $n \leq 10$<br>$10 < n \leq 20$<br>$n > 20$ | 1,0<br>0,9<br>0,8 | | $n \leq 5$<br>$5 < n \leq 10$<br>$n > 10$ | 1,0<br>0,9<br>0,8 | |
| CS | Czechoslovakia | CSN 73-1701 | $n \leq 10$<br>$n > 10$ | 1,0<br>0,9 | | | | |
| D | Federal Republic of Germany | DIN 1052, Teil 2 (draft 08/1984) | $n \leq 10$<br>$10 < n \leq 30$<br>$n > 30$ | 1,0<br>2/3 + 10/3n<br>70/3n | | $n \leq 6$<br>$6 < n \leq 12$<br>$n > 12$ | 1,0<br>2/3 + 2/n<br>10/n | |
| DDR | German Democratic Republic | TGL 33135/01 - 01/1984 | $n \leq 10$<br>$10 < n \leq 20$<br>$n > 20$ | 1,0<br>0,9<br>18/n | | | | |
| DK | Denmark | DS 413-09/1975 | $n \leq 10$<br>$n > 10$ | 1,0<br>0,67 | | | | |
| GB | United Kingdom | BS 5268-1984 | $n \leq 10$<br>$n > 10$ | 1,0<br>0,9 | | $n \leq 10$<br>$n > 10$ | 1 - 0,03(n-1)<br>0,7 | |
| N | Norway | NS 3470-1979 | | | | | | |
| NL | Netherlands | NEN 3852-07/1973 | $n \leq 10$<br>$10 < n \leq 20$<br>$n > 20$ | 1,0<br>0,9<br>0,8 | | | | |
| P | Poland | PN-81/B-03150.03 - 1982 - | $n \leq 10$<br>$10 < n \leq 20$<br>$n > 20$ | 1,0<br>0,9<br>0,8 | | | | |
| S | Sweden | Svensk Byggnorm - 1975 - | | | | | | |
| SU | USSR | SNIP II-W. 4-71 | | | | | | |
| USA | USA | NDS - 1977 - | | 1,0 | | | see Fig. 1 | |

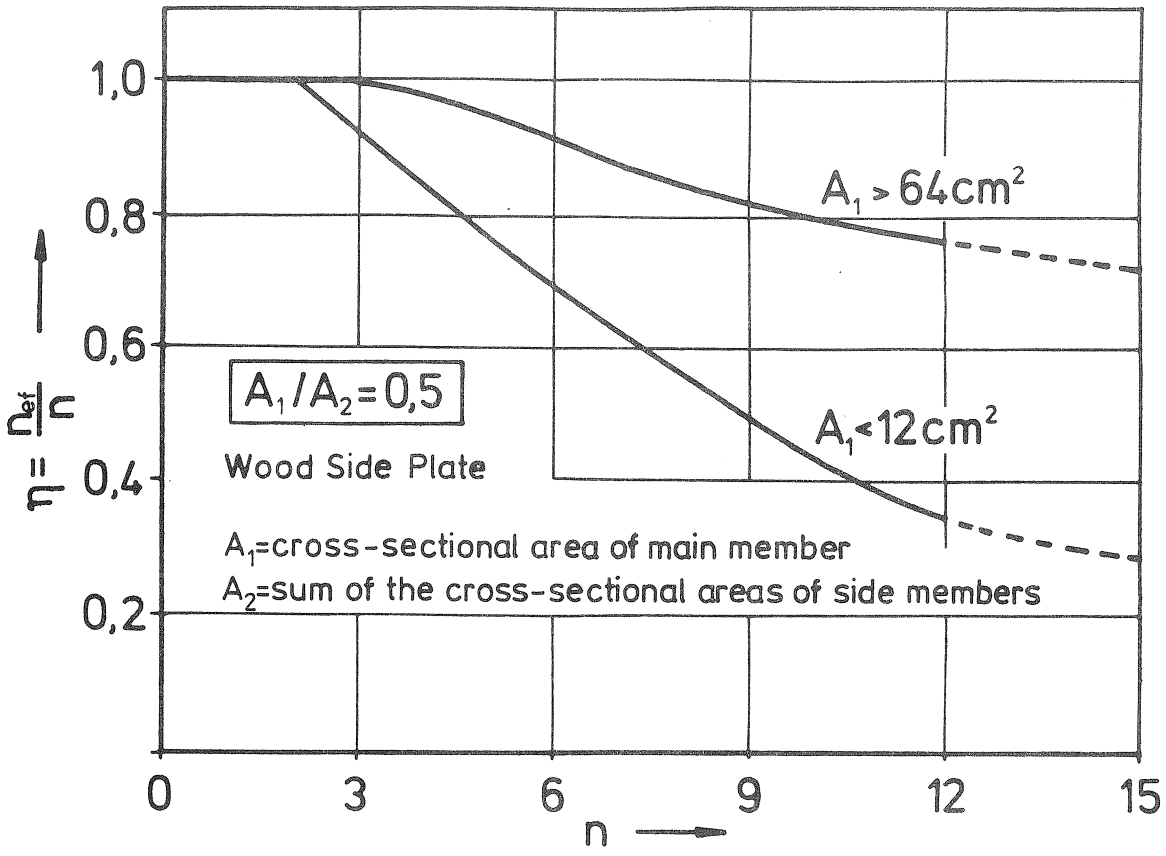


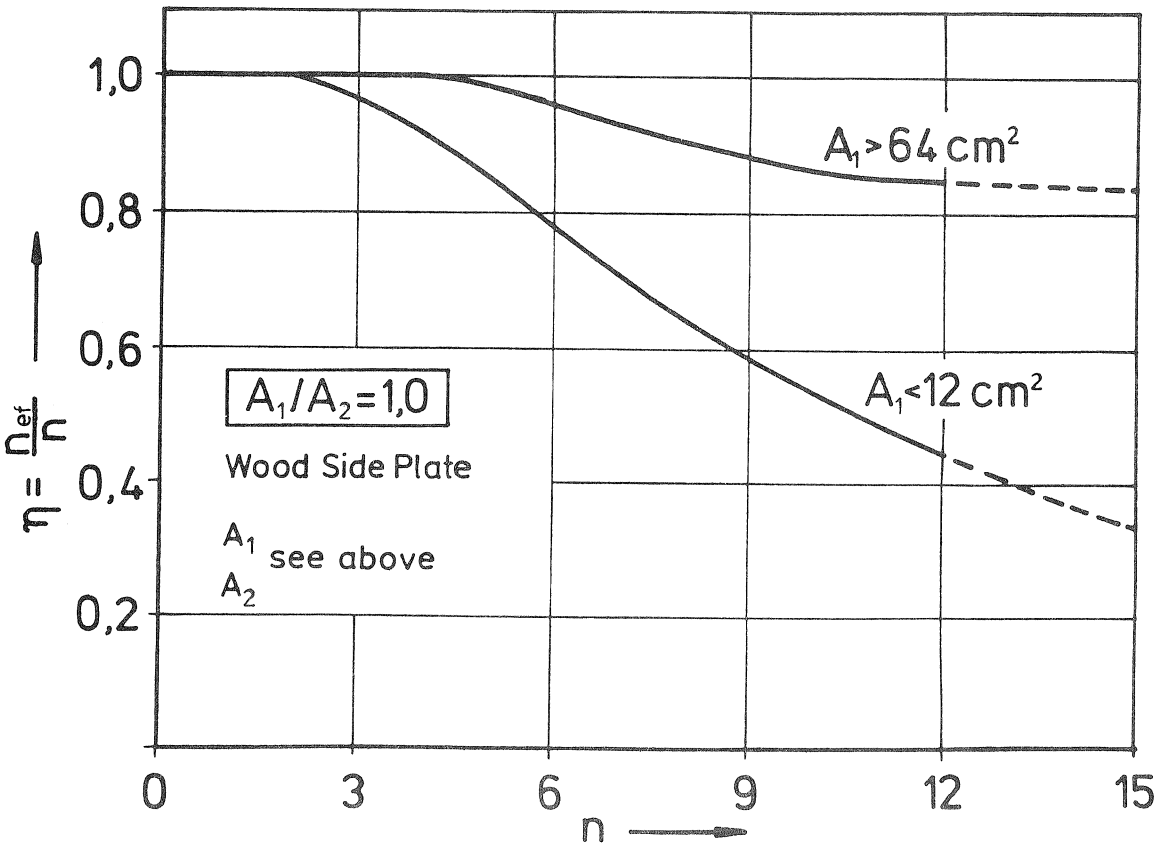


Fig. 1: Effectiveness $\eta$ for bolts/dowels according to Canadian and USA standard

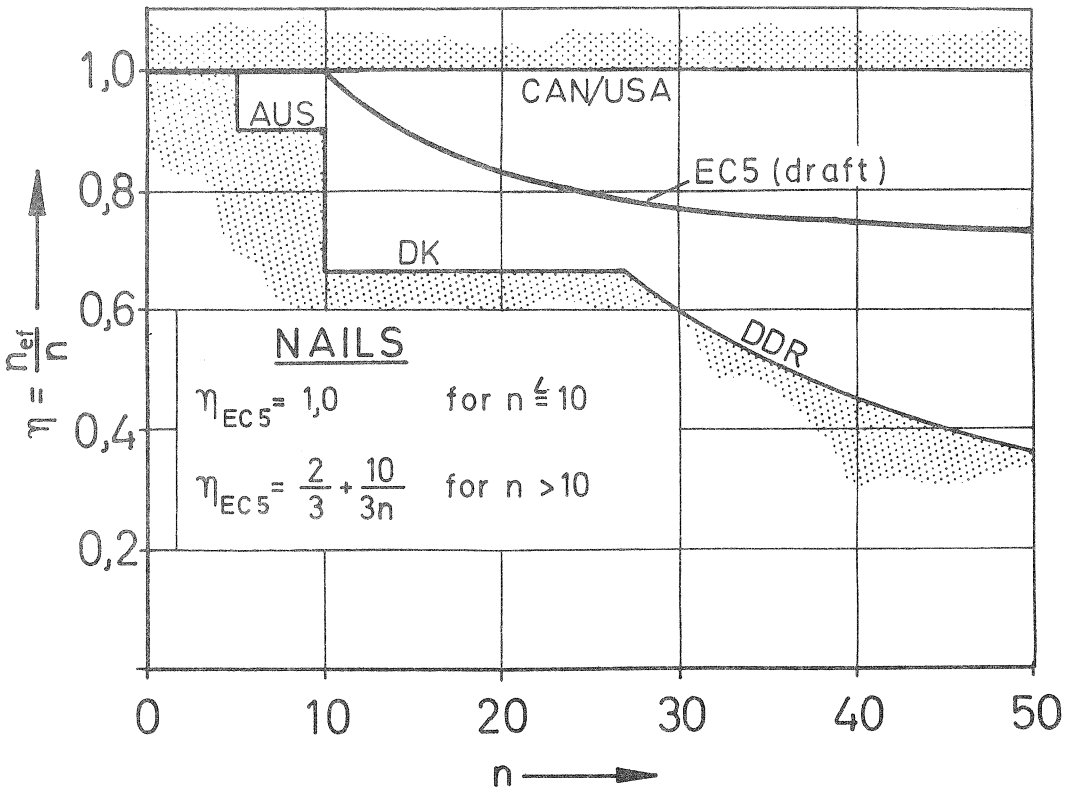


Fig. 2: Effectiveness $\eta$ according to Eurocode 5 (draft) compared with national code design rules for nailed joints

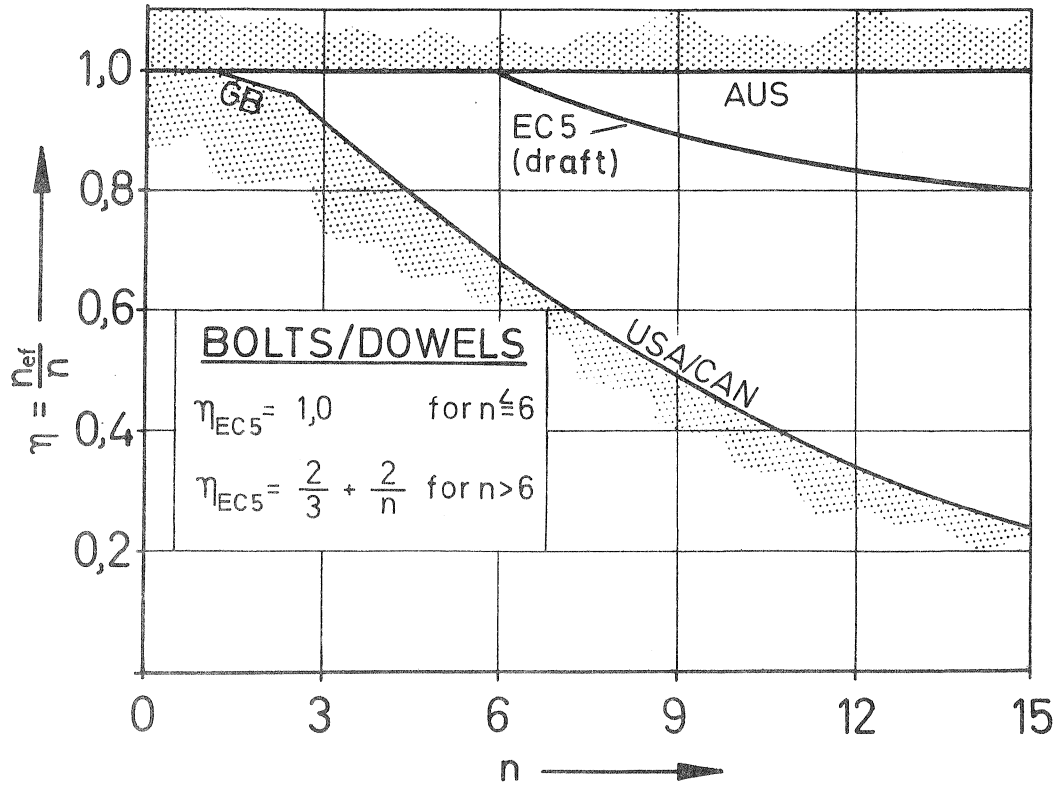


Fig. 3: Effectiveness $\eta$ according to Eurocode 5 (draft) compared with national code design rules for bolted/doweled joints

CIB-W18/19-7-4

INTERNATIONAL COUNCIL FOR BUILDING RESEARCH STUDIES AND DOCUMENTATION

WORKING COMMISSION W18 - TIMBER STRUCTURES

# THE PREDICTION OF THE LONG-TERM LOAD CARRYING CAPACITY OF JOINTS IN WOOD STRUCTURES

by

Y M Ivanov and Y Y Slavic
Central Research Institute for Building Structures CNIISK of Gosstroy
USSR

MEETING NINETEEN
FLORENCE
ITALY
SEPTEMBER 1986

# THE PREDICTION OF THE LONG-TERM LOAD CARRYING CAPACITY OF JOINTS IN WOOD STRUCTURES

by Yu.M.IVANOV and Yu.Yu.SLAVIC

The purpose of the paper is to consider the experimental principles of normalizing the design carrying capacity of joints according to the strength and the strain criteria.

1.Glued joints normalized according to the strength criterion.

Let us consider as an example the joints with steel deformed bars glued into wood. The results of long-term tests of this joints carried out in CNIISK (bars by diameter d=14mm glued on the 20d langs at an angle of $30^{\circ}$ to the grain) are demonstrated by demilogarithmic coordinates in Figure 1 (the straight line I). The failure of the joints was a result of an initial shear of the bar along the glue line (the phenol resorcinol glue),i.e. was a cohesion failure. The long-term carrying capacity of the joints is characterized by a linear relatioship log t(N) (t is time-to-failure,sec.; N is the force acted) and hence is in agreement with the general strength relatioship of solids /1/;this straight line I cuts on the abscisse the segment $\log A=17,56\pm0,86$.

The polymers unplastisized as a glue hardened (on which bars glued into wood) have the relative strength decrease in time under a constant load the same at different stress states. Therefore the value of log A for the work of a glue interlayer basically in shear might be determined for example from tensile tests. Such experiments have been made in CNIISK on films of a hardened phenolic glue KB-3 (at $20^{\circ}$C) by means of testing machine with a constant force program. In Figure 1 is shown the straight line 2 being middle for experimental points with the confidence interval $\pm2,5$ percent. This line cuts on the axis log t the segment $\log A=17,42\pm0,74$. The data for films

of phenol-formaldehyde resin hardened with cloth filler (specimens were made under pressure with polymerization at high temperature) under tensile stress during from 300 up to 2800 hours /2/ are in agreement (Figure 1,3) with the data mentioned above. The practically coincidence takes place (i.e. log A for films and glued joints do not differ statistically). Wood has the same log A /3/. And this signifyes that the qualitative glued joints which at machine control tests shown failure by wood (so far as a pure adhesion failure does not proceed due to porous wood surface greatly developed) will have the relative strength decrease under long-term load not more than wood; therefore the prediction of their long-term carrying capacity might be based on a long-term strength of wood /4/.

2. The joints with metal working part normalized according to the strain criterion.

The work of those joints under load is determined by bearing strain in wood and bending of a metal working part. To this are attributed joints with nails, bolts, plates with pressed teeth. The peculiarity of these joints cosists in that the maximum force at short time test corresponds to an continual growth of shear strain up to a significance magnitude without any increase in load. The diagramms "deformation-force" here obtained are a smouth curves (Figure 3,a). In these curves the different stages of the deformation process are not distinguished although they are essential for the establishemnt of design load carrying capacity of joint according to the strain criterion. Thus the test with uninterrupted loading does not supply us any necessary information in order to have a right conception about the real resource of the prolonged serviceability of the joint. By means of test with periodically unloading by equal steps of the load growth (Figure 2,b) we can isolate elastic and permanent deformations but both depend on force non-linearly. However, a linear part

will appear on the diagramm "elstic deformation-permanent deformation per cycle"(Figure 2,c); by means of its comparison with the shear strain augmentations under long-term load for example of nail joints (Figure 2,d) might be shown in the range $0 < N < N_{I-II}$ deformations rise in time insignificantly whereas an excess of the force $N_{I-II}$ (it is the upper border of the mentioned linear deformation region corresponding the elastic strain $D_{eI-II}$ ) is followed by an intesive strain development; the latter might in time give rise the significant shear deformations in joint. This conclusion is supported by long-term tests of different kind of joints of this type. From this the conclusion follows that we can provide a reliable work of wood structures under long-term load proceeding from the value of $N_{I-II}$ for the determination of design carrying capacity of joints.In this case a lowering coefficient of the upper border of the region mentioned above for the service life of joints ought to be introduced to the experimental value of $N_{I-II}$ .However,as the exceeding $N_{I-II}$ does not give rise an immediate breakdown of structure but will be followed by growth of its deformations that coefficient is taken equal to 1,3. From this the long-term carrying capacity of joint is $N_t \leq (N_{I-II} / 1,3)$.

In conclusion it is necessary to note that according to the calculation method of limit states (on strength condition) the design load carrying capacity is just the long-term carrying capacity of structure in the end of its service life /4/.

REFERENCES

1. Zurkov S.N., Narsullaev B.N. The time strength relationship for solids.-J.of techn.physics (in Russ) 1953,v.7,N 10

2. Chasman B. Creep and time fracture strength of plastics under tensile stresses.-Modern Plastics,1944,v.21,N 6

3. Ivanov Yu.M. The moisture effect on the long-term strength of wood.-Forestry Journal (in Russ),1975,N 5.

4. Ivanov Yu.M., Slavik Yu.Yu. On the long-term carrying capacity of wood structures.-CIB Working Commission W-18 on timber structures.21-25 of May 1984,Rappenswil.

5. Ivanov Yu.M. The regions of elastic and permanent strains of wood.Building and Architecture (in Russ),1979,N 12

Central Research Institute for Building
Structures CNIISK of Gosstroy USSR

SUMMARY

THE PREDICTION OF THE LONG-TERM LOAD CARRYING CAPACITY OF JOINTS IN WOOD STRUCTURES by Yu.M.IVANOV and Yu.Yu.SLAVIK.

The experimental principles were considered of the normalization of joints according to the strength and strain criteria. By means of the data of long-term tests it was shown a near one to another by magnitude of the relative decrease of strength in time that is applied to the prediction of long-term carrying capacity of wood joints with phenolic glues. According to the analysis of diagramms of elastic and permanent deformations the region of a stabile work of joint under long-term load has been established for joints with metal working part.The upper border of this region is taken in normalizing calculation of such joints.Figurs 2,references 5.

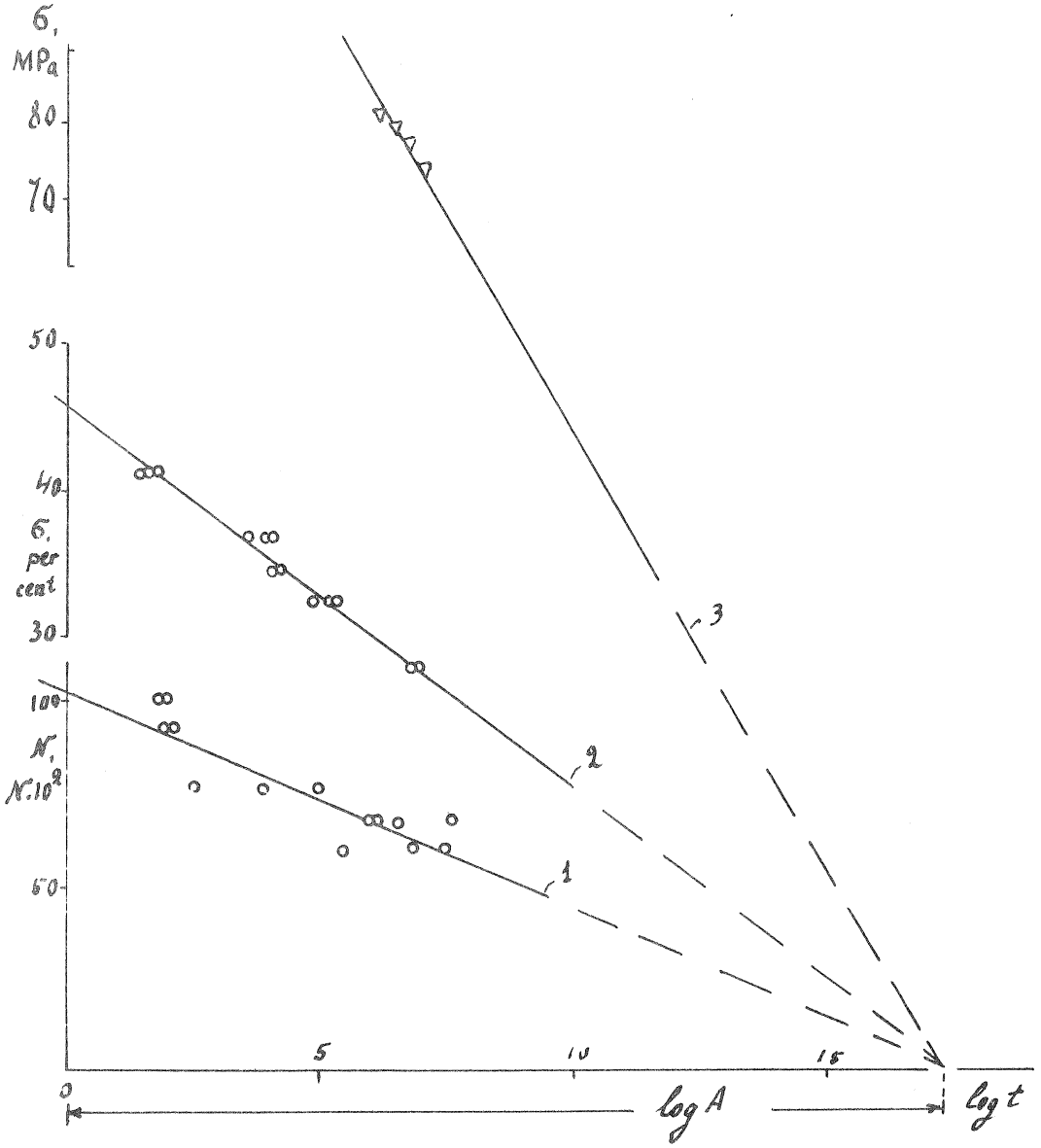


Yu. M. Ivanov, Yu. Yu. Slavik. Figure 1

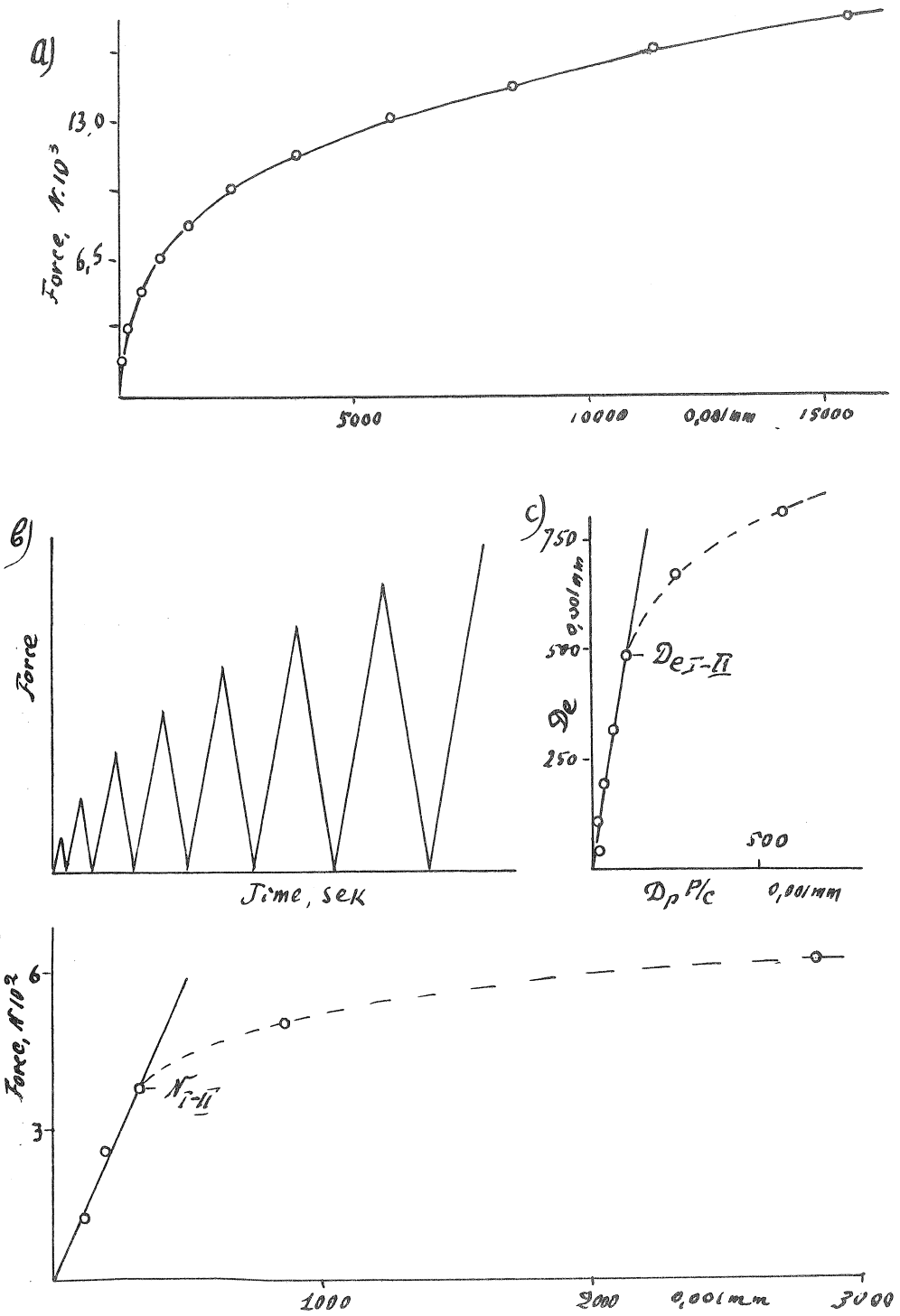


Figure 2

Yu. M. Ivanov, Yu. Yu. Slavik.

CIB-W18/19-7-5

INTERNATIONAL COUNCIL FOR BUILDING RESEARCH STUDIES AND DOCUMENTATION

WORKING COMMISSION W18 - TIMBER STRUCTURES

# SLIP IN JOINTS UNDER LONG-TERM LOADING

by

T Feldborg and M Johansen
Danish Building Research Institute
Denmark

MEETING NINETEEN
FLORENCE
ITALY
SEPTEMBER 1986

# Slip in splice joints under long-term loading

## Introduction

For timber trussed structures with mechanical fasteners the main part of the deflection of the structure is due to slip in the joints. In chords, continuously over two or more spans, the stiffness of the joints has considerable influence on the bending moment distribution to spans and supports at the nodes.

Full scale experiments with timber trussed rafters, type W, mounted as roof structure of an open house were carried out in the years 1974-1978 at SBI and reported in (1). The structure was long-term loaded, and measurements were taken of the deflections of the trussed rafters and deformations of the splice joint at midspan of the lower chord. The moisture content of the timber varied in accordance with the outdoor climate.

The deformations varied very much and were bigger than expected.

It was therefore decided to perform long-term tests on splice joints under controlled climate conditions in order to study how the deformations and the strength are influenced by alternating moisture content. One of the aims is to get realistic design values for slip in joints when calculating internal forces and deflections of timber trussed structures.

The tests are being carried out at the laboratory of the Danish Building Research Institute (SBI). The loading was applied in the autumm of 1984 and the main preliminary results of the slip-measurements that will be continued for half a year are reported below.

## Test programme

The tests comprise:

4 types of connectors used in splice joints in pure tension having the same characteristic short-term strength $F_k$ according to Danish design rules:

Hy: Hydro-Nail plates

Sa: Steel plates with prepunched holes and annularly threaded nails

Ps: Plywood gussets and square plain-shank nails

Pa: Plywood gussets and annularly threaded nails

2 levels of constant long-term loading:

N: No load

L: Loaded with 0,4 $F_k$

After the long-term loading period the strength and stiffness in short-term loading of each specimen will be measured.

5 moisture conditions:

| Series | Conditioned at 23 °C and the relative humidity mentioned below: | | |
|---|---|---|---|
| | Before production of specimens | During the long-term testing | Before the short-term testing |
| | RH p.c. | RH p.c. | RH p.c. |
| 1N and 1L | 65 | 65 | 65 |
| 2N and 2L | 85 | 85 | 85 |
| 3N and 3L | 85 | 85 | 50 |
| 4N and 4L | 85 | 85 alt. with 50 | 85 |
| 5N and 5L | 85 | 85 " " 50 | 50 |

6 test specimens in each series (repetitions).

The test programme is shown in figure 1.

| Relative humidity | | Series | Load | Number of specimens | | | |
|---|---|---|---|---|---|---|---|
| | | | | Hydro-Nail | Steel plates | Plywood gussets | Plywood gussets |
| | | | | | Annularly threaded nails | Square plain-shank nails | Annularly threaded nails |
| RH p.c. | RH p.c. | | F kN | Hy | Sa | Ps | Pa |
| 65 1N | 1L 65 | 1N | 0 | 6 | 6 | 6 | 6 |
| | | 1L | 10,0 | 6 | 6 | 6 | 6 |
| 0 | 0 | | | | | | |
| | | 2N | 0 | 6 | 6 | 6 | 6 |
| 85 2N | 2L 85 | 2L | 8,6 | 6 | 6 | 6 | 6 |
| | 50 | 3N | 0 | 6 | 6 | 6 | 6 |
| | 3N 3L | 3L | 8,6 | 6 | 6 | 6 | 6 |
| 0 | 0 | | | | | | |
| | 4N | 4N | 0 | 6 | 6 | 6 | 6 |
| 85 | 4L 85 | 4L | 8,6 | 6 | 6 | 6 | 6 |
| 50 | 50 | 5N | 0 | 6 | 6 | 6 | 6 |
| 6 weeks | 5N | 5L | 8,6 | 6 | 6 | 6 | 6 |
| 0 | 5L 0 | | | | | | |
| Loading time | | | | | | | |

Total number of test specimens 240. 120 of these (series L) are long-term loaded and their slips are measured.
—●— Shaping of specimens.
—✕— Short-term test.

Figure 1. Test programme for long-term tested splice joints.

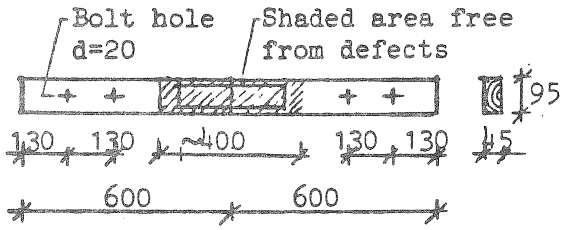


Specimen for short-term loading

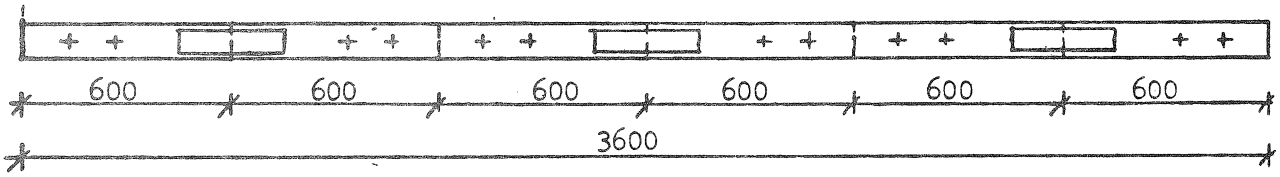


Specimen for long-term loading

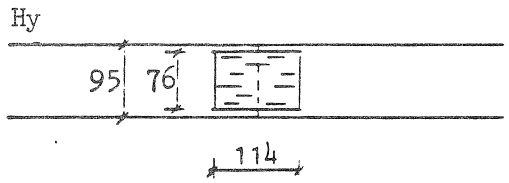


**Hydro-Nail plates**
**2 plates 76 x 114 x 1.25 mm**

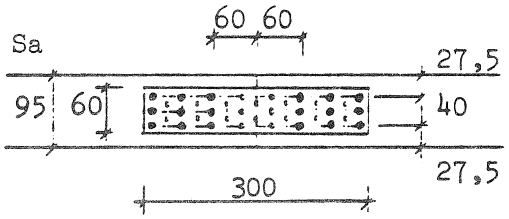


**Steel-plates**
**2 plates 60 x 300 x 1.5 mm**
**4 x 9 annularly threaded**
**nails 4.0 x 35 mm**

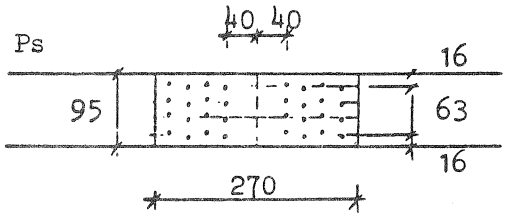


**Plywood gussets**
**2 gussets 95 x 270 x 12 mm**
**4 x 16 square plain-shank**
**nails 2.5 x 45 mm**

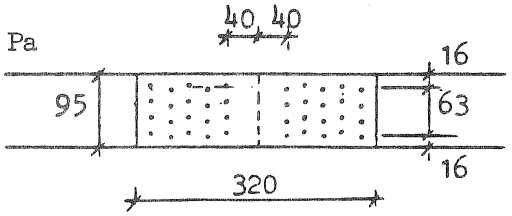


**Plywood gussets**
**2 gussets 95 x 320 x 12 mm**
**4 x 20 annularly threaded**
**nails 2.5 x 45 mm**

Figure 2. Test specimens.

## Test specimens

The timber is Swedish spruce, selected on the basis of the density $\rho$ (mass and volume at moisture content $\omega \sim 0.15$) in the interval of 0.41 to 0.51 and delivered planed in the size of 45 × 95 mm.

The test specimens were cut from the timber material and distributed over the different test series so as to obtain the same average density for all series and so that a specimen for short-term load only (series N) was paired with the corresponding specimen for long-term load (series L) in the same plank of timber.

Before shaping, the timber members underwent a conditioning period for 6 to 7 weeks in climate rooms at 23 ± 2 °C and 65 ± 3 per cent relative humidity for series 1 and 85 ± 3 per cent for series 2, 3, 4 and 5.

Dimensions and details of the test specimens are shown in figure 2.

## Test methods

### Short-term loading

The rigidity and the ultimate strength of the splice joints are determined according to ISO 6891 Timber structures - Joints made with mechanical fasteners.

### Long-term loading

All the test specimens were designed with the same characteristic short-term strength $F_k$ = 25 kN according to Danish design rules. The long-term load was fixed at 10.0 kN for series 1 and at 8.6 kN for series 2, 3, 4 and 5.

### Test arrangement

The test arrangement is shown in figure 3a and 3b.

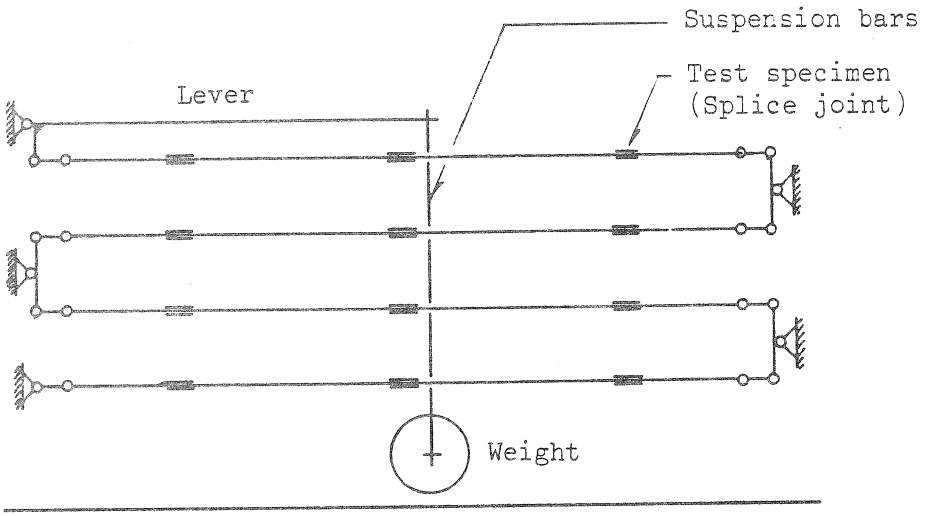


Figure 3a. Principle of test apparatus for long-term loaded splice joints.

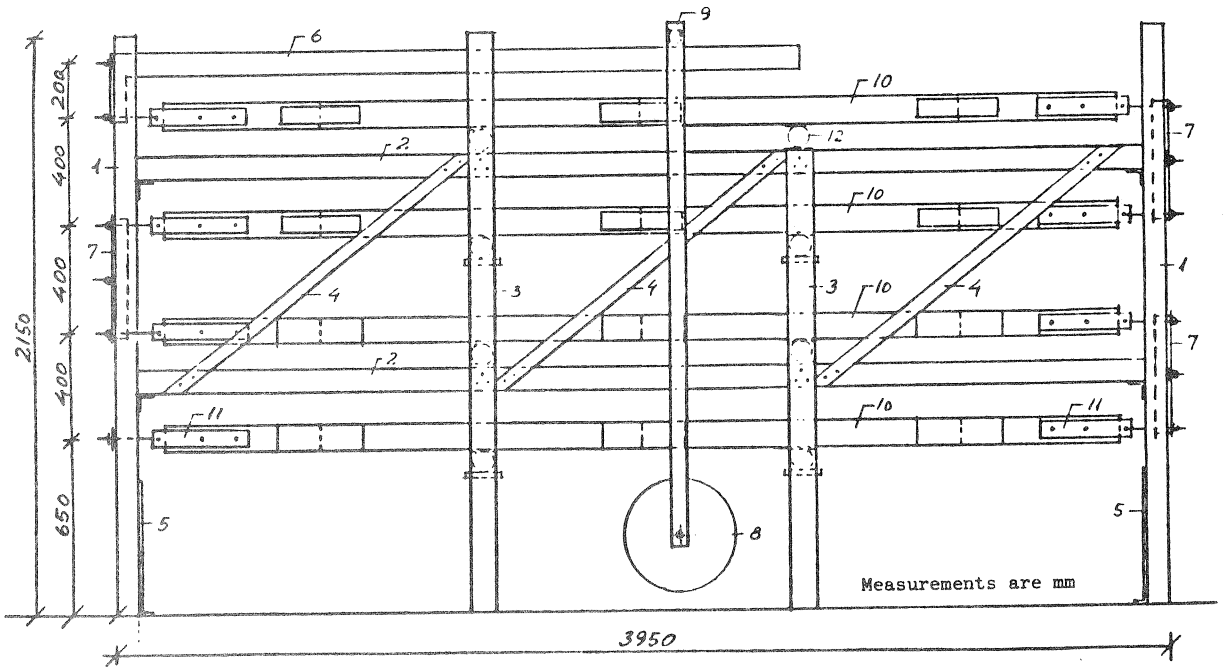


1. Steel columns
2. Glulam beam
3. Boards supporting beams
4. Longitudinal bracing
5. Transversal bracing
6. Lever for loading (gear approx. 1:10)
7. Lever between test specimens (gear 1:1)
8. Concrete weight
9. Suspension of concrete weight
10. Test specimen. Splice joints in pure tension
11. Fastening of test specimen. Bolted steel plates
12. Roller support of test specimen

Figure 3b. Test apparatus for long-term loaded splice joints. There are 10 of such rigs.

Measurement of slip due to long-term loading

The slip in the joint is measured as the mutual displacement of the two connected timber members. The measuring "points" are two pairs of brass angles, one pair fastened to the top and one pair to the bottom of the timber with a horizontal spacing of about 30 mm.

The slip is measured by means of a displacement transducer in a "gauge" as shown in figure 4. The measuring data was recorded by a portable data-logger and transferred to a permanent disc store.

The long-term stability of the measuring instrument is checked at every measurement of 12 joints and corrections are carried out if necessary.

The slip is taken as an average of the top and bottom measurements. The error of the recorded slip is in the interval of ± 0.05 mm.

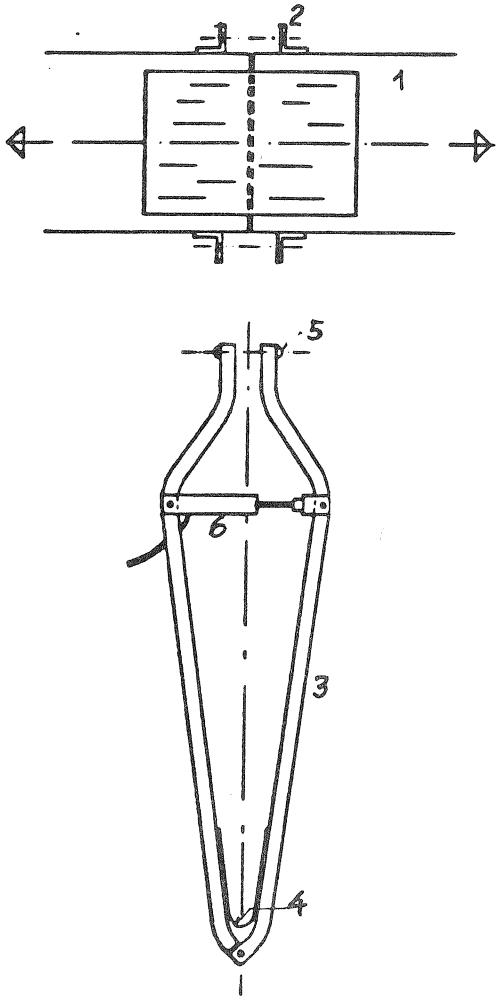


1 Timber specimen with connector

2 Brass angle with conical hole for slip measuring

3 Frame of solid aluminium

4 Spring

5 Sphere

6 Displacement transducer

Figure 4. Gauge and measuring points.

Conditioning

The tests are being carried out in climate rooms with controlled and continuously recorded relative humidity and with the temperature continuously recorded.

The three levels of the relative humidity aimed at are determined within 85 ± 3 per cent RH, 65 ± 3 per cent RH and 50 ± 3 per cent RH, with the temperature 23 ± 3 °C.

Moisture content

Variation in the moisture content of the timber at the joints is estimated on the basis of weekly weighings of small clear specimens of the test material, 100 mm long and with a cross section of 45 x 95 mm. The variations are shown in connection with the relevant slip-time curves.

Loading and slip measuring

The day before the long-term load was applied, the joint "slips" were measured and defined as zero.

The load was applied in two turns. First the specimens were loaded with a tension force due to the load from the lever arm and the suspension bars, see figure 3, which came to about 25 per cent of the full long-term load. The specimens were then lined up and the day after the rest of the load was applied by means of the concrete weight. The time for applying the concrete weight was about 1.5 minute.

As soon as possible after full load was achieved the slip measuring started, having the first measuring of each joint in the interval of 2 to 20 minutes. Within the first hour, day, week and month the number of measurings per joint was about 3, 5, 8 and 10 respectively.

Results

The initial slip was chosen as the slip after 10 minutes of full load, in the following named $v_{t10}$, derived from a liniar regression analysis of the slip and log time taking into account the values of the first month. These values of $v_{t10}$ are shown in figure 5.

| Series | Load | Rel.hum. | Hy | Sa | Ps | Pa |
|---|---|---|---|---|---|---|
| | kN | per cent | mm | mm | mm | mm |
| 1L | 10.0 | 65 | 0.27 | 1.25 | 0.88 | 1.20 |
| 2L | 8.6 | 85 | 0.26 | 0.90 | 0.63 | 0.63 |
| 3L | 8.6 | 85 | 0.29 | 0.96 | 0.56 | 0.71 |
| 4L | 8.6 | 85 | 0.25 | 0.95 | 0.55 | 0.71 |
| 5L | 8.6 | 85 | 0.25 | 1.07 | 0.62 | 0.67 |

Figure 5 Initial slip values $v_{t10}$ defined as average slip values after 10 minutes of full load. The values are based on measurings from 6 specimens per joint type in each series.

Series 2 and 3 have been treated identically and can thus be pooled. The same applies to series 4 and 5.

Figure 6 shows joint slips in relation to time and with comparison of the slips, when the joints are exposed to constant (series 1, 2 and 3) or alternating (series 4 and 5) relative humidity, together with the corresponding moisture content of the series in question.

Figure 7 shows the same slip-time curves as in figure 6, but with the time in logaritmic scale.

From the curves shown in figure 6 it appears that the main part of the slip-increase takes place in the drying-out periods. In the latest periods with increasing moisture content the slips have apparently even decreased slightly.

Until the end of May 1986 there have been 7 cycles of alternating relative humidity (one cycle is 6 weeks with 85 per cent RH followed by 6 weeks with 50 per cent RH). The increase of the slip per cycle has been systematically falling for all types of joints, but there is no indication as to whether or when a limit value of the slip will be reached.

Figures 7a and 7b show joint slip in relation to time, keeping load and climate conditions constant. Series 1 is loaded with 10.0 kN and kept at 23 °C and 65 per cent RH, which is an often used climate for lab experiments. Results from series 1 can therefore be useful for instance when comparing with standardized short-term tests of mechanical timber fasteners.

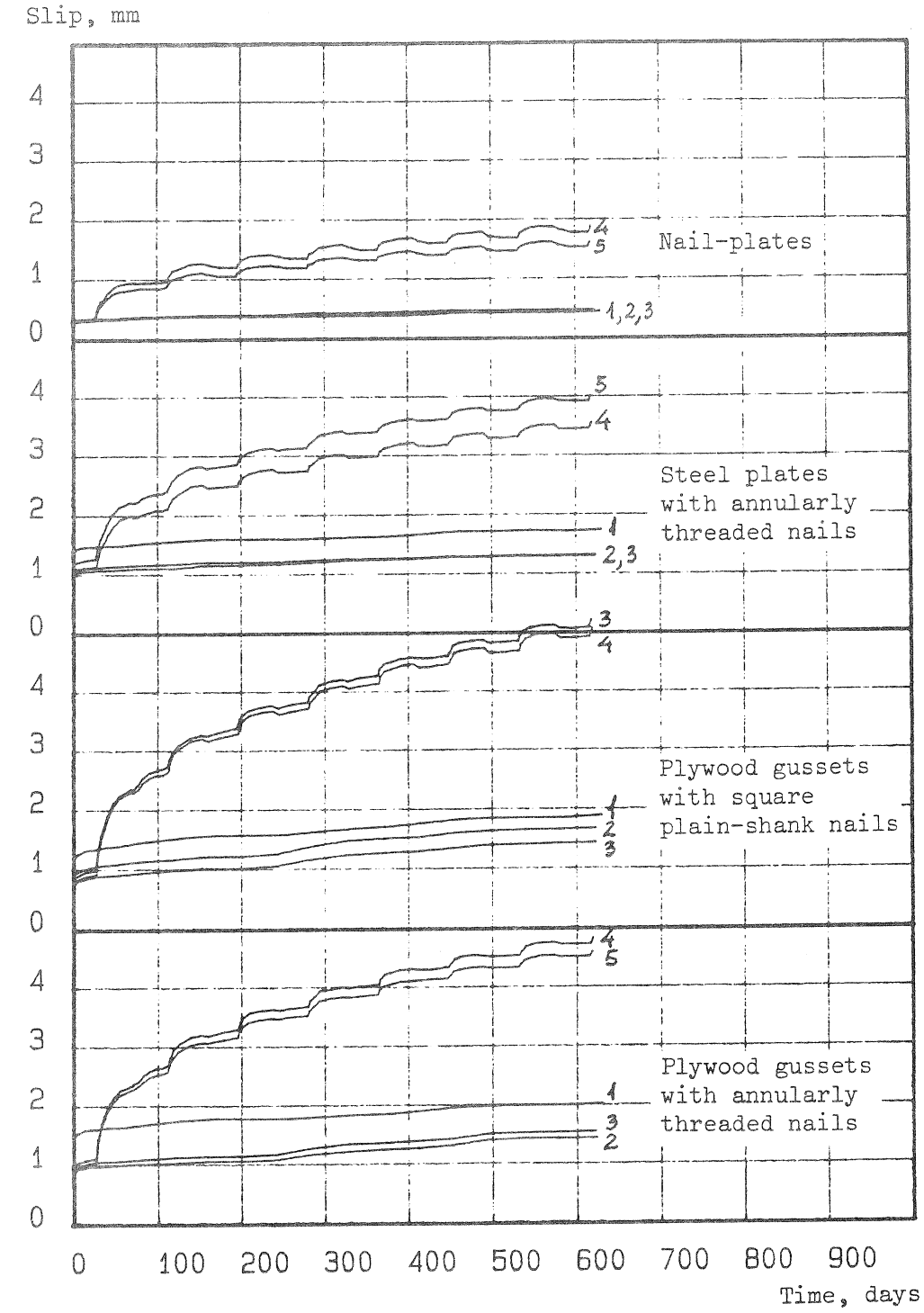


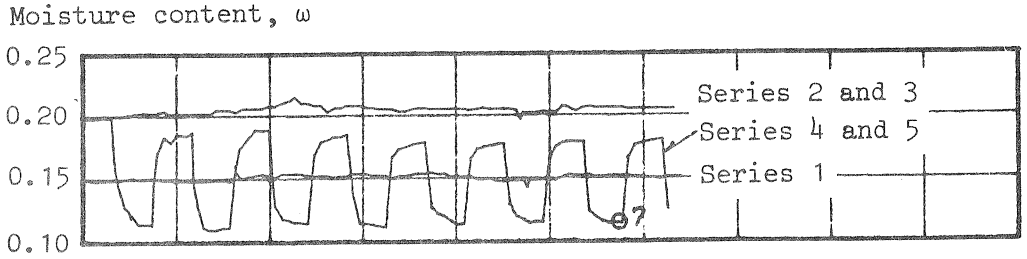


Figure 6. Slip in long-term loaded splice joints.
Series 1: Constant load F = 10.0 kN. Constant rel.hum. 65 p.c.
Series 2 and 3: Constant load F = 8.6 kN. Constant rel.hum. 85 p.c.
Series 4 and 5: Constant load F = 8.6 kN. Alternating rel.hum. 85–50 p.c.
Each curve is an average from 6 joints.

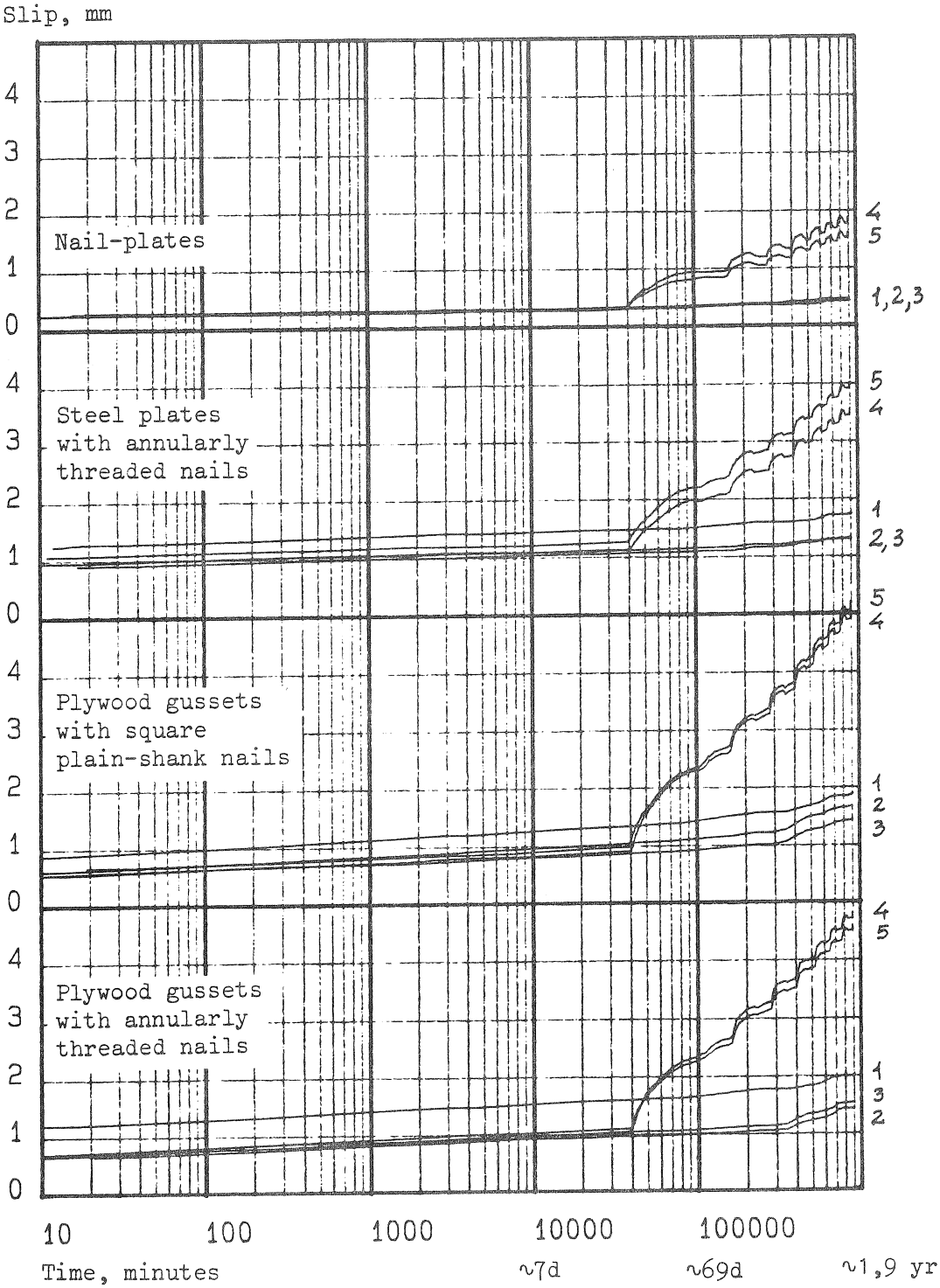


Figure 7. Slip in long-term loaded splice joints.
Series 1: Constant load F = 10.0 kN. Constant rel.hum. 65 p.c.
Series 2 and 3: Constant load F = 8.6 kN. Constant rel.hum. 85 p.c.
Series 4 and 5: Constant load F = 8.6 kN. Alternating rel.hum. 85-50 p.c.
Each curve is an average from 6 joints.

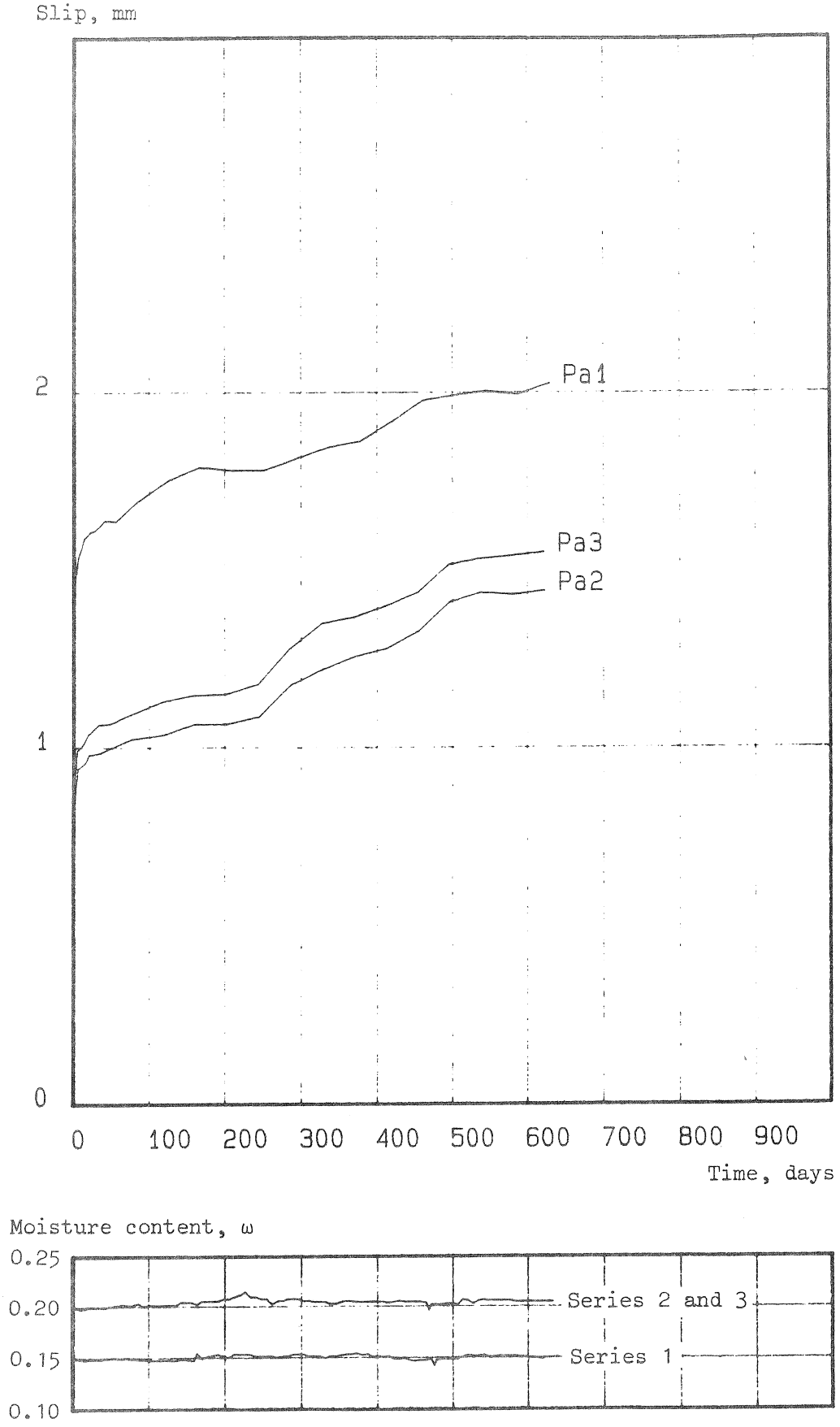


Figure 8. Increase of slip influenced by variation in moisture content. Each curve is an average from 6 joints.

The joints with nailed plywood gussets have in series 2 and 3 and to some extent also series 1 a notable increase in the slips after a loading time of about 230 days. This might be due to the small deviations from the "constant" relative humidity, which give a corresponding variation in the moisture content. The increase mentioned can be seen in a large scale in figure 8.

Slip values are shown in figure 9. The results from series 2 and 3 are pooled and so are the results from series 4 and 5.

| Series | Number of specimens | Load | Relative humidity | Initial slip | Slip after long-term loading | | | Relative slip |
|---|---|---|---|---|---|---|---|---|
| | | F | | $v_{t10}$ | | v | δ | $v/v_{t10}$ |
| | | kN | per cent | mm | Days | mm | | |
| 1LHy | 6 | 10.0 | 65 | 0.27 | 588 | 0.45 | 0.10 | 1.6 |
| 1LSa | 6 | 10.0 | 65 | 1.25 | 588 | 1.70 | 0.07 | 1.4 |
| 1LPs | 6 | 10.0 | 65 | 0.90 | 588 | 1.85 | 0.12 | 2.1 |
| 1LPa | 6 | 10.0 | 65 | 1.20 | 588 | 2.00 | 0.08 | 1.7 |
| 2+3LHy | 12 | 8.6 | 85 | 0.28 | 596 | 0.45 | 0.11 | 1.6 |
| 2+3Lsa | 12 | 8.6 | 85 | 0.95 | 596 | 1.30 | 0.15 | 1.4 |
| 2+3LPs | 12 | 8.6 | 85 | 0.60 | 596 | 1.55 | 0.13 | 2.6 |
| 2+3LPa | 12 | 8.6 | 85 | 0.65 | 596 | 1.50 | 0.08 | 2.2 |
| 4+5LHy | 12 | 8.6 | 85 (50) | 0.25 | 604 | 1.75 | 0.09 | 7.0 |
| 4+5LSa | 12 | 8.6 | 85 (50) | 1.00 | 604 | 3.75 | 0.09 | 3.7 |
| 4+5LPs | 12 | 8.6 | 85 (50) | 0.60 | 604 | 5.05 | 0.07 | 8.7 |
| 4+5LPa | 12 | 8.6 | 85 (50) | 0.70 | 604 | 4.65 | 0.06 | 6.7 |

Figure 9. Average values of the initial slip and slip measured after 7 cycles of alternating relative humidity, indicated by "7" on figure 6. δ is the coefficient of variation.

## Conclusion

The absolute slip values listed in figure 9 are rather high for the joint types other than the joint with nail plates and for these types the slip will often be decisive for the design of the joint.

From the values of relative slip it appears that stiffness of joints based on slip measurements from short-term loading does not give sufficient information about the development of the slip due to long-term loading. The relative slip varies considerably for the different types of joints.

Further tests are needed to clarify the influence of other load levels and other humidity histories.

Reference

(1) Wood trussed rafter design. Strength and stiffness tests on joints. Long-term deflection of W-trussed rafters. Th. Feldborg and Marius Johansen. SBI-report 118, 1981, 166 p. Danish Building Research Institute.

CIB-W18/19-7-6

INTERNATIONAL COUNCIL FOR BUILDING RESEARCH STUDIES AND DOCUMENTATION

WORKING COMMISSION W18 - TIMBER STRUCTURES

# THE DERIVATION OF DESIGN CLAUSES FOR NAILED AND BOLTED JOINTS IN EUROCODE 5

by

L R J Whale
Timber Research and Development Association
United Kingdom
I Smith
University of New Brunswick
Canada

MEETING NINETEEN
FLORENCE
ITALY
SEPTEMBER 1986

## INTRODUCTION

During the period February 1983 - December 1985, TRADA was awarded research contracts from both the Commission of the European Communities and the UK Department of the Environment, to study the properties of mechanical timber joints under short-term lateral loading. In both projects emphasis was placed upon joints with dowel-type fasteners such as nails and bolts, and a broad range of timber species, and wood-based sheet materials were included in the test programmes. Detailed discussions of the research methodologies and test results from various aspects of these projects are available in previous papers (1 - 4).

In July 1985, based upon a preliminary analysis of test results which were available at the time, the authors were able to provide the drafting committee of Eurocode 5 with tentative proposals for changes to the draft Eurocode clauses relating to joint design as they stood at that time. These were partially accepted, and selected clauses have appeared in subsequent drafts. This paper sets out the interpretation procedures adopted in deriving these design clauses, and based now upon the complete set of results, final suggestions are made as to their precise form.

## SCOPE AND TEST METHODS

A large part of the materials test programme concentrated upon deriving reliable embedment characteristics for solid timbers and sheet materials of significance to the European Community. A schematic representation of an embedment test is provided in Figure 1. Strengths and stiffnesses derived from this special type of joint test provide the basis upon which properties of more conventional jointing arrangements may be predicted. Seven timbers were selected for embedment testing; UK grown sitka spruce and Scots pine, European redwood and whitewood, spruce-pine-fir, keruing and greenheart. These were loaded parallel or perpendicular to the grain in either a compressive or a tensile mode, with nails ranging from 2.65 to 6 mm in diameter and bolts from 8 mm to 20 mm in diameter.

Sheet material specimens of Finnish birch plywood, Finnish spruce plywood, French pine plywood, Canadian Douglas fir plywood, 4.8 mm and 8 mm tempered hardboard were also tested, with nails ranging from 2.65 mm to 4mm in diameter. Twenty test replications were used throughout the programme of embedment tests, and specimen dimensions conformed with the minimum requirements of BS5268: Part 2 (5). Solid wood material was sampled such that each set of test replications for a given species, possessed a similar density distribution (Smith and Whale (6)). The thickness of solid wood specimens was limited to twice the connector diameter, whilst actual board thicknesses were used in the case of the sheet material specimens. Toleranced holes, approximately 1.5mm oversize, were provided in all bolted specimens. Nailed hardwood specimens were prebored to 80% of the nail diameter.

Test specimens were pre-conditioned in an environment of 20° ± 2° C and 65% ± 5% RH prior to testing. The embedment test apparatus was carefully designed and calibrated to ensure accurate load-embedment properties were established. Specimens were subjected to nine pre-loading cycles before being loaded to failure. Test durations were always in the order of 15 minutes. In total, the embedment test programme extended to some 3200 tests. In addition 1500 tests were conducted to establish connector properties, with 420 tests on complete joints.

## TEST RESULTS

### Nailed embedment specimens

Results from the nailed embedment test programme are fully documented in annexed volumes which accompanied the final project reports for each research contract (2,3). The results of linear regression analyses of correlations between mean maximum embedding strengths (defined at an embedment of 2.1 mm if a maximum had not already been reached) and mean timber density, for sets of twenty test specimens, are summarized in Table 1. Although timber density was measured as oven dry mass/volume at test, it was subsequently adjusted to the draft Eurocode definition of mass and volume at 20°C/65% RH, based on an average specimen moisture content of 13%. All regression lines were fitted through zero.

Table 1 — Results of linear regression analyses of maximum nail embedding strength against mean timber density at 20°C/65% r.h.

| | Nail diameter | Number of timber species tested | Mean maximum embedding strength (N/mm²) | | | Combined regression parallel and perp. to grain |
|---|---|---|---|---|---|---|
| | | | Tension parallel to grain | Compression parallel to grain | Compression perpendicular to grain | |
| Softwood | 2·65 | 2 | 0·056 ϱ | — | 0·069 ϱ | 0·063 ϱ |
| | 3·35 | T//, Ch 5<br>C// 2 | 0·059 ϱ | 0·062 ϱ | 0·064 ϱ | 0·062 ϱ |
| | 4·00 | 2 | 0·056 ϱ | — | 0·057 ϱ | 0·057 ϱ |
| | 5·00 | 2 | 0·052 ϱ | — | 0·058 ϱ | 0·055 ϱ |
| | 6·00 | T//, Ch 5<br>C// 2 | 0·049 ϱ | 0·046 ϱ | 0·049 ϱ | 0·048 ϱ |
| Hardwood | 3·35 | T//, Ch 2<br>C// 1 | 0·086 ϱ | 0·084 ϱ | 0·079 ϱ | 0·083 ϱ |
| | 6·00 | T//, Ch 2<br>C// 1 | 0·080 ϱ | 0·072 ϱ | 0·062 ϱ | 0·071 ϱ |

ϱ is adjusted to mass and volume at 20°C/65% r.h. (kg/m³)

Figure 2 provides a graphical illustration of the trends summarized in Table 1. It is evident that softwoods and tropical hardwoods do not project along the same density trend defined through zero, and that a diameter dependency also exists. Since differences between the strength properties of specimens loaded at different grain orientations, or in a tensile or compressive mode, were only very small, the combined regression values which appear in Table 1 and are plotted in Figure 2, were used in subsequent analyses.

It was assumed that the diameter dependency illustrated in Figure 2 could be represented by a power law relationship. Hence, indexing all values to those of a 6 mm nail:

$$\frac{S_{H,d}}{S_{H,6}} = \left(\frac{d}{6}\right)^{\alpha} \text{ or } \log\left(\frac{S_{H,d}}{S_{H,6}}\right) = \alpha \log\left(\frac{d}{6}\right)$$

The corresponding log-log plot to determine values of $\alpha$ is given in Figure 3. From this graph $\alpha$ was estimated to be -0.36 for softwoods and -0.28 for tropical hardwoods. Nail embedding strengths could therefore be represented thus:

Softwoods $S_{H,d} = 0{\cdot}048\,\varrho \left(\frac{d}{6}\right)^{-0{\cdot}36}$ ..... Eq. 1

Tropical Hardwoods $S_{H,d} = 0{\cdot}071\varrho \left(\frac{d}{6}\right)^{-0{\cdot}28}$ ..... Eq. 2

where:

$S_{H,d}$ is mean maximum embedding strength ($N/mm^2$)
$\varrho$ is timber density (mass and volume at 20°C/65%RH ($Kg/m^3$)

Bolted embedment specimens

A complete set of results from the programme of bolted embedment tests is provided in the annexed volumes which accompany the final reports for each of the research contracts (2,3). Regression analyses similar to those described earlier for nailed specimens, yielded the following results:

Table 2 - Results of linear regression analyses of mean maximum bolt embedding strengths against mean timber density at 20° C/65% r.h.

| Bolt diameter | Number of timber species tested | Mean maximum embedding strength ($N/mm^2$) | | | Combined regression parallel to grain |
|---|---|---|---|---|---|
| | | Tension parallel to grain | Compression parallel to grain | Compression perpendicular to grain | |
| M8 | 2 | 0·075ϱ | — | 0·034ϱ | 0·075ϱ |
| M12 | T//, Ch. 5 C// 2 | 0·073ϱ | 0·069ϱ | 0·029ϱ | 0·071ϱ |
| M16 | 2 | 0·065ϱ | — | 0·027ϱ | 0·065ϱ |
| M20 | T//, Ch. 5 C// 2 | 0·066ϱ | 0·063ϱ | 0·023ϱ | 0·064ϱ |
| M12 | T//, Ch. 2 C// 1 | 0·072ϱ | 0·068ϱ | 0·033ϱ | 0·070ϱ |
| M20 | T//, Ch. 2 C// 1 | 0·067ϱ | 0·065ϱ | 0·027ϱ | 0·066ϱ |

ϱ is adjusted to mass and volume at 20°C/65% r.h. ($kg/m^3$)

Since the strength properties of tensile and compressive specimens loaded parallel to grain are very similar, these results are combined in the right-hand column of the Table, to form a single regression trend for parallel to grain loading. The diameter trends evident in Table 2 are illustrated in Figure 4. "Best-fit" straight lines were used to describe these trends as follows:

| | | |
|---|---|---|
| Loading parallel to grain | Softwoods and Tropical Hardwoods | $-S_{H,d} = (0{\cdot}082 - 0{\cdot}00082d)\,\varrho$ ..... Eq. 3 |
| Loading perpendicular to grain | Softwoods | $-S_{H,d} = (0{\cdot}041 - 0{\cdot}00088d)\,\varrho$ ..... Eq. 4a |
| | Tropical Hardwoods | $-S_{H,d} = (0{\cdot}043 - 0{\cdot}00081d)\,\varrho$ ..... Eq. 4b |

## CALIBRATION OF DESIGN EQUATIONS

### Nailed joints

For nailed joints in which the nail has a high slenderness ratio i.e. joints which would tend to produce a mode 3 failure, Larsen (7) has shown that the yield load for a joint, assuming both the nail steel and the wood act as ideal rigid-plastic materials, is given by: 6

$$P_y = 0{\cdot}40825 \times \emptyset^{0.5} \times S_H^{0.5} \times d^2 \times f_y^{0.5} \quad \text{..... Eq. 5a.}$$

$$\emptyset = \frac{4\beta}{1+\beta} \qquad \beta \text{ is defined as } \frac{S_H(\text{Joint member 1})}{S_H(\text{Joint member 2})}$$

If the joint has members with similar embedding strengths this simplifies to:

$$P_y = \sqrt{2} \times 0{\cdot}40825 \times S_H^{0.5} \times d^2 \times f_y^{0.5} \quad \text{..... Eq. 5b}$$

For the purposes of design codes, a simplified expression has often been employed:

$$R_K = Kd^{\beta} \quad \text{..... Eq. 6}$$

where:—

$R_K$ is the characteristic load-carrying capacity

$K$ and $\beta$ are constants

By assuming that nail embedding strengths can be described by equations 1 and 2, and assuming nail yield stress varies according to the equation $f_y = 50(16-d)$ N/mm², which has previously been derived by the authors following extensive nail bending tests (8, 9), equation 5b can be re-written and simplified thus:

Softwoods:

$$P_y = \sqrt{2} \times 0.40825 \times \left[0.048 \varrho \left(\frac{d}{6}\right)^{-0.36}\right]^{0.5} \left[50(16-d)\right]^{0.5} d^2$$

$$\Rightarrow P_y = 1.235 \varrho^{0.5} (16-d)^{0.5} d^{1.82} \quad \text{.....Eq. 7}$$

Tropical Hardwoods:

$$P_y = \sqrt{2} \times 0.40825 \times \left[0.071 \varrho \left(\frac{d}{6}\right)^{-0.28}\right]^{0.5} \left[50 (16-d^2\right]^{0.5} d^2$$

$$\Rightarrow P_y = 1.398 \varrho^{0.5} (16-d)^{0.5} d^{1.86} \quad \text{.....Eq. 8}$$

A least squares fitting procedure was then adopted to establish "best-fit" estimates of K and $\beta$ which would minimise discrepancies between the form of equations 7 and 8 and that in equation 6. The corresponding design equations therefore became:

Softwoods: $R_K = (5.5 \sqrt{\varrho}) d^{1.65}$ .....Eq. 9

Tropical Hardwoods: $R_K = (6.3 \sqrt{\varrho}) d^{1.65}$ * ..... Eq. 10

$\varrho$ is the characteristic timber density (kg/m$^3$)

At low loads, slip in nailed joints can be estimated from Wilkinson's linear elastic solution for joints which tend to produce mode 3 failures (10). For joints with members of the same embedding strength throughout, this can be written:

$$\frac{P}{\delta} = \frac{0.665668}{4} E^{1/4} K_{01}^{3/4} d^{7/4} \quad \text{.....Eq. 11}$$

where:

$E$ = connector modulus N/mm$^2$

$K_{01}$ = joint member elastic bearing constant N/mm$^2$

Elastic bearing constants defined from tangents to the initial portion of the load-embedment curve, were collected during the embedment test programme. Analyses similar to those described earlier for nail embedding strength, yield the following approximate density/diameter trends in these tangent moduli:

Softwoods: $K_{01} = 0.25 \varrho \left(\frac{d}{6}\right)^{-1.10}$

Tropical Hardwoods: $K_{01} = 0.46 \varrho \left(\frac{d}{6}\right)^{-0.78}$

where $\varrho$ is the mean timber density (kg/m$^3$)

---

* assuming nail holes are pre-bored to 0.8d.

Inserting these, along with the following expression for connector modulus $E = 4960(d+35.5)\ N/mm^2$ derived in previous papers by the authors (8,9), equation 11 yields the following:

Softwoods: $$\frac{P}{\delta} = 2{\cdot}13\,\varrho^{3/4}\,(d+35{\cdot}5)^{1/4}\,d^{0{\cdot}93}$$

Tropical Hardwoods: $$\frac{P}{\delta} = 2{\cdot}24\,\varrho^{3/4}\,(d+35{\cdot}5)^{1/4}\,d^{1{\cdot}16}$$

These formulae are approximated to a good degree by the following simplified expressions for nailed joint slip at low loads:

Softwoods: $$\delta = \frac{P}{5{\cdot}15\,\varrho^{3/4}\,d^{0{\cdot}95}} \quad (mm) \qquad \text{.....Eq. 12}$$

Tropical Hardwoods: $$\delta = \frac{P}{5{\cdot}4\,\varrho^{3/4}\,d^{1{\cdot}19}} \quad (mm) \qquad \text{.....Eq. 13}$$

$\varrho$ is the mean timber density ($kg/m^3$)

## Bolted and dowelled joints

In 1941 Johansen first applied yield theory to timber fasteners (11). Möller later expanded this application by looking at non-symmetric joints and joints with dissimilar members (12). The complete set of generalised equations, which assume that the nail steel and the wood act as ideal rigid-plastic materials are given in Figure 5, along with their associated failure modes.

For bolted joints partial fixities produced by washers under the heads and nuts of bolts would inhibit the development of failure modes 1a (two member joints only) and 2. It is reasonable therefore, that the following curtailed set of equations can apply to bolted joints:

$$R_K = \min \begin{cases} S_H\,dl & \text{.....Eq. 14·1} \\ S_H\,dl\,\alpha\beta \quad -2 \text{ member joints only} & \text{.....Eq. 14·2} \\ S_H\,dl\,\alpha\beta/2 \quad -3 \text{ member joints only} & \text{.....Eq. 14·3} \\ 4d^2\sqrt{\frac{10\beta S_H}{1+\beta}}\sqrt{\frac{f_y}{240}} & \text{.....Eq. 14·4} \end{cases}$$

Based upon the earlier analyses of bolt embedding strengths embodied in equations 3 and 4, the following approximate equation is considered appropriate for the purposes of calculating SH values as input in equations 14:

Softwoods and Tropical Hardwoods: $$S_H = \frac{0{\cdot}0008\varrho\,(100-d)}{2{\cdot}3\,\mathrm{Sin}^2\theta + \mathrm{Cos}^2\theta} \qquad \text{.....Eq. 15}$$

$\varrho$ is the characteristic timber density ($kg/m^3$)

This code proposal for calculating bolt bearing strengths, is illustrated in Figure 4, against the original source data.

In the case of joints with plain dowels there are no partial end fixities, and so any curtailment of the design equations in Figure 5 must be based upon an alternative rationale. Assuming that the need to account for mode 1b and mode 3 failures is accepted, emphasis must focus on the need for equations d, e and f in Figure 5, accounting for mode 1a and mode 2 type failures. Figure 6 illustrates the effect of neglecting the possibility of mode 1a failures in two-member joints with low and high bearing strengths. It can be seen that extremely unconservative solutions can be obtained for certain types of practical joint arrangements, and it is therefore proposed that equation f is retained.

Figure 7 illustrates the effect of neglecting the possibility of mode 2 failures, in joints with low and high bearing strengths. Although situations can be postulated where unconservatisms are in the order of 40%, eg Figure 7a, it can be seen that these only occur when l/d ratios are small. Neglect of equations d and e can therefore be expected to influence only a minority of designs, and thus the following set of design equations are recommended for dowelled joints:

$$R_K = \min \begin{cases} S_H\, d\, l & \text{.... Eq 16·1} \\ S_H\, d\, l \propto \beta \quad \text{– 2 member joints only} & \text{.... Eq. 16·2} \\ S_H\, d\, l \propto \beta/2 \quad \text{– 3 member joints only} & \text{.... Eq. 16·3} \\ S_H\, d\, l \left[ \dfrac{\sqrt{\beta + 2\beta^2 (1 + \propto + \propto^2) + \beta^3 \propto^2} - \beta(1+\propto)}{1+\beta} \right] \quad \text{– 2 member joints only} & \text{.... Eq. 16·4} \\ 4d^2 \sqrt{\dfrac{10\beta\, S_H}{1+\beta}} \sqrt{\dfrac{f_y}{240}} & \text{..... Eq. 16·5} \end{cases}$$

The effect of replacing timber members by steel plates, is to shift the yield points of the connector to the steel/timber interface. Analyses of these revised joint geometries reveal that where the side members are steel, loads calculated from equations 14 and 16 may be used, if l and SH values apply to the wood member and $\propto = \beta = 1.0$. Where the middle member is a steel plate equation 14.3 can be ignored and equations 14.4 and 16.5 should be multiplied by 1.4.

COMPARISONS AND DISCUSSION

A comparison of the design equations for nailed joints suggested in this paper, with those which appear in the CIB code (13), and the latest draft Eurocode 5 (14) is provided in Table 3 below.

Table 3 – Comparison of nailed joint design equations

| Ref | Formula | Nail diameter (mm) 2 | 3 | 4 | 5 | 6 | 7 | 8 |
|---|---|---|---|---|---|---|---|---|
| CIB * Code (13) | $\frac{R_k}{\sqrt{\varrho}} = 6{\cdot}32\,d^{1{\cdot}7}$ | 20·53 (410) | 40·91 (818) | 66·71 (1334) | 97·49 (1950) | 132·92 (2658) | 172·74 (3455) | 216·76 (4335) |
| Latest draft # Eurocode 5 (14) | $\frac{R_k}{\sqrt{\varrho}} = 6{\cdot}0\,d^{1{\cdot}6}$ without prebored holes | 18·19 (364) | 34·80 (696) | 55·14 (1103) | 78·80 (1576) | 105·49 (2110) | 134·99 (2670) | 167·15 (3343) |
| | $\frac{R_k}{\sqrt{\varrho}} = 7{\cdot}5\,d^{1{\cdot}6}$ with prebored holes | 22·74 (455) | 43·50 (870) | 68·92 (1378) | 98·49 (1970) | 131·86 (2637) | 168·74 (3375) | 208·93 (4179) |
| Proposals in # this paper (Eqs 9 and 10) | $\frac{R_k}{\sqrt{\varrho}} = 5{\cdot}5\,d^{1{\cdot}65}$ Softwood | 17·26 (345) | 33·70 (673) | 54·17 (1083) | 78·28 (1566) | 105·76 (2115) | 136·39 (2728) | 170·0 (3400) |
| | $\frac{R_k}{\sqrt{\varrho}} = 6{\cdot}3\,d^{1{\cdot}65}$ Tropical Hardwoods | 19·77 (395) | 38·60 (772) | 62·05 (1241) | 89·67 (1793) | 121·14 (2423) | 156·25 (3125) | 194·73 (3895) |

Values in parenthesis are joint capacities in N, assuming $\varrho$ = 400 Kg/m$^3$

* The CIB code assumes $\varrho$ is a lower 5- percentile value defined by oven dry mass/volume at 20°C/65% RH. To be approximately equivalent to the definition of $\varrho$ proposed in Eurocode 5, the tabulated values should be multiplied by $\sqrt{1.13}$.

# $\varrho$ is defined as a lower 5- percentile value defined by mass and volume at 20°C/65% RH (Kg/m$^3$).

It can be seen that, if the joint members were softwood without prebored holes, the proposals in this paper are generally similar to those which currently appear in the draft Eurocode. If the joint members were hardwoods with prebored holes, the proposals in this paper are slightly lower than those which currently exist in the CIB code or present draft Eurocode.

Although embedment properties for plywoods and tempered hardboards were gathered during the test programme, lack of time has precluded their incorporation in this paper. Preliminary analyses do,however, suggest that softwood and hardwood plywood embedding strengths are predicted reasonably well by their respective solid timber relationships given in equations 1 and 2. If this were the case then the value of $\beta$ in equation 5a would simply equate to the ratio (characteristic framing timber density, $\varrho_t$ /characteristic plywood density, $\varrho_p$ ) which would mean a modification factor of:

$$\frac{\sqrt{\frac{4(\varrho_t/\varrho_p)}{[1+(\varrho_t/\varrho_p)]}}}{\sqrt{2}} = \sqrt{\frac{2(\varrho_t/\varrho_p)}{1+(\varrho_t/\varrho_p)}}$$

could be applied to solid timber nailed joint design formulae such as those in equations 9 and 10 to make them applicable to plywood-to-timber joints. A modified approach would need to be developed for tempered hardboards, since these did not project along the same density trends as the solid timber specimens.

At low values of P the linear elastic expressions developed in equatins 12 and 13 for slip in nailed joints, compare well with the non-linear expression $\delta = 0{\cdot}5d\,(P/R_K)^{1.5}$ which appears in the draft Eurocode.

Selective comparisons with experimental data and with predictions from an analytical joint model developed by Smith (15), suggest that the existing expression in Eurocode 5 is superior however, as P approaches $R_K/3$.

There are in essence two differences between the design method recommened for bolted and dowelled joints in this paper, and those which apppear in the CIB code, or the present draft Eurocode. These concern both the format of the design equations,and the variation of bolt bearing strength which is assumed within each design method. Table 4 provides a comparison of the latter.

Table 4 – Comparison of bolt embedding properties assumed in various design formulae

| | Loading parallel to grain | | | Loading perpendicular to grain | | |
|---|---|---|---|---|---|---|
| Bolt diameter | CIB * Code | Present draft # Eurocode 5 | Proposals in this # paper | CIB* Code | Present draft # Eurocode 5 | Proposals in this # paper |
| 6 | ↑ | ↑ | 0·075ϱ | 0 070 ϱ | 0·075ϱ | 0·033ϱ |
| 8 | | | 0·074ϱ | 0·056ϱ | 0·057ϱ | 0·032ϱ |
| 12 | 0·070ϱ | 0·075ϱ | 0·070ϱ | 0·044ϱ | 0·042ϱ | 0·031ϱ |
| 16 | | | 0·067ϱ | 0·040ϱ | 0·036ϱ | 0·029ϱ |
| 20 | | | 0 064ϱ | 0·038ϱ | 0·032ϱ | 0·028ϱ |
| 24 | ↓ | ↓ | 0·061ϱ | 0·037ϱ | 0·030ϱ | 0·026ϱ |

* The CIB code assumes ϱ is a lower 5- percentile value defined by oven dry mass/volume at 20°C/65% RH. To be approximately equivalent to the definition of ϱ proposed in Eurocode 5, the tabulated values should be multiplied by 1.13.

# ϱ is defined as a lower 5- percentile value defined by mass and volume at 20°C/65% RH (Kg/m$^3$).

It can be seen, particularly for the smaller bolt diameters loaded perpendicular to the grain, that the data gathered during this research is in conflict with the values assumed in the present draft Eurocode, and the CIB code.

The design equations given in the present draft Eurocode and the CIB code are approximative expressions based on the theoretical yield theory equations given in Figure 5, (Larsen (16)). During the development of these approximate expressions, the ability to facilitate jointing between dissimilar members has been forfeited.

A strict comparison of these two approaches can be made if a common assumption is adopted regarding variations in bolt bearing strengths. Such a comparison is provided in Figures 8 and 9, assuming bolt bearing strengths are of the form given in the CIB code. It can be seen that for three-member joints, deviations between the uncurtailed yield theory equations and the approximative CIB equations are reasonably small. For two-member joints deviations are more pronounced. When the 25% increase in dowelled joint capacities which is permitted in the CIB code is taken into account, these deviations lead to unconservatisms in the order of 50% in some cases. The basis of this increase in strength for dowelled joints is not known to the authors. For bolted two-member joints the CIB design equations are intermediate between the full yield theory equations and the curtailed set which are proposed in this paper. They therefore approximate the behaviour of joints displaying only a partial end fixity.

Figures 10 and 11 provide similar comparisons those in Figures 8 and 9, but this time each design method is used with its particular assumption as to variations in bolt bearing strengths. It can be seen that by incorporating Eq 15 in the yield theory equations, deviations with the CIB formulae for two-member joints become more pronounced in the case of dowelled joints and less pronounced in the case of bolted joints. For three-member joints differences remain relatively small. Since for the example of an 8mm bolt chosen in Figures 10 and 11 very little difference exists between the SH values of the CIB code and the present draft Eurocode, the same is likely to apply to the draft Eurocode rules.

To summarize, the proposals in this paper will in some cases allow slight increases in bolted joint capacities compared with those of the CIB code, but, in their present form, will lead to much reduced values for dowelled joints. Since the background to the increases in dowelled joint capacities which are permitted in the CIB code (and the present draft Eurocode) are unknown to the authors, it is unclear whether a similar logic can be applied to the design methods described herein.

Finally, the slip of bolted joints at approximately one third characteristic load is presently assumed to be approximated by 0.1d + 1mm, and for dowelled joints by 0.1d. Selective comparisons with test data and with predictions from an analytical joint model (Smith (15)), verify the accuracy of these equations.

RECOMMENDATIONS

Based upon the foregoing discussion, and extensive materials testing, the following design equations are recommended for incorporation into the draft Eurocode 5:

Nailed joints

The characteristic load-carrying capacity in N per shear plane for nails with a minimum yield stress of 50(16-d) MPa may be determined by:

$$R_K = Kd^{\beta}$$

For softwoods: $K = 5{\cdot}5\sqrt{\rho}$ and $\beta = 1{\cdot}65$

For tropical hardwoods: $K = 6{\cdot}3\sqrt{\rho}$ and $\beta = 1{\cdot}65$

$\rho$ = characteristic density in $Kg/m^3$

For hardwoods in strength classes C5, C6, C7 and C8 it is assumed that pre-bored holes of 0.8d are used.

Bolted joints

The characteristic load-carrying capacity in N per shear plane for bolts with a yield strength of at least 240 MPa, may be taken as the smallest value found from the formulae below:

$$R_K = \min \begin{cases} S_H\, dl & \text{....Eq. 14·1} \\ S_H\, dl \propto \beta \quad -2 \text{ member joints only} & \text{.....Eq. 14·2} \\ S_H\, dl \propto \beta/2 \quad -3 \text{ member joints only} & \text{.....Eq. 14·3} \\ 4d^2 \sqrt{\dfrac{10\beta S_H}{1+\beta}} \sqrt{\dfrac{f_y}{240}} & \text{..... Eq. 14·4} \end{cases}$$

where d, l, $\propto$ and $\beta$ are defined in the Figures below:

Two-member joints

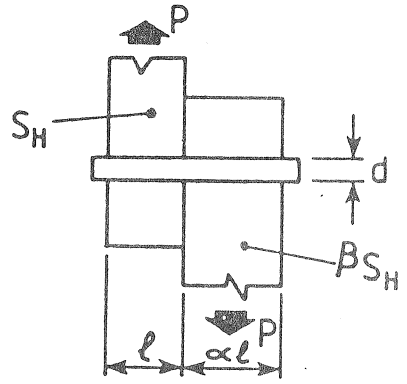


Arrangement

Three-member joints

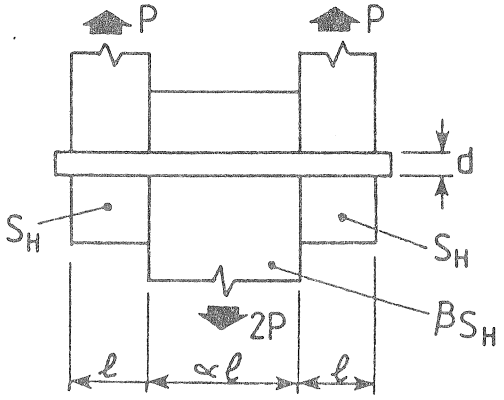


Arrangement

Bolt bearing strengths may be determined by:

Softwoods and Tropical Hardwoods: $$S_H = \frac{0{\cdot}0008\rho\,(100-d)}{2{\cdot}3\,\sin^2\theta + \cos^2\theta}$$

where:

d = bolt diameter (mm)
$\rho$ = characteristic density (Kg/m$^3$)
$\theta$ = angle between the direction of loading and the direction of the grain in the joint member being considered.

Where the side members are steel plates the loads calculated from the above formulae may be used with 1 and SH equal to the values for the wood member, and $\alpha = \beta = 1.0$. Where the middle member is a steel plate equation 14.3 can be omitted and equation 14.4 should be multiplied by 1.4.

Dowelled joints

The characteristic load-carrying capacity in N per shear plane for dowels of yield strength fy, may be taken as the smallest value found in the formulae below:

$$R_K = \min \begin{cases} S_H\, d\, l & \text{.... Eq 16·1} \\ S_H\, d\, l\, \alpha\beta \quad -2 \text{ member joints only} & \text{.... Eq. 16·2} \\ S_H\, d\, l\, \alpha\beta/2 \quad -3 \text{ member joints only} & \text{.... Eq. 16·3} \\ S_H\, d\, l \left[\dfrac{\sqrt{\beta + 2\beta^2(1+\alpha+\alpha^2) + \beta^3\alpha^2} - \beta(1+\alpha)}{1+\beta}\right] \quad -2 \text{ member joints only} & \text{.... Eq. 16·4} \\ 4d^2 \sqrt{\dfrac{10\beta\, S_H}{1+\beta}} \sqrt{\dfrac{f_y}{240}} & \text{.... Eq. 16·5} \end{cases}$$

where d, l, $\alpha$, $\beta$ and SH are as defined for bolts.

Where the side members are steel plates the loads calculated from the above formulae may be used with 1 and SH equal to the values for the middle member, and $\alpha = \beta = 1.0$. Where the middle member is a steel plate equation 16.5 should be multiplied by 1.4.

Finally, it is recommended that future research on mechanical joints be directed toward an improved understanding of :

i) behaviour of joints with multiple fasteners

ii) losses of strength and cumulative deformations in joints under long-term loading

REFERENCES


1. WHALE, L.R.J., SMITH, I and HILSON, B.O. Behaviour of nailed and bolted joints under short-term loading - Conclusions from some recent research. IUFRO Wood Engineering Group meeting. Florence, Italy. September 1986.

2. TRADA. Final Report to DOE (April 1983 - September 1985). Mechanical timber joints. November 1985.

3. TRADA. Final report to CEC (February 1983 - December 1985). Mechanical joints in structural timberwork. Information for probabilistic design. December 1985.

4. WHALE, L.R.J. and SMITH, I. A method for determining the embedding characteristics of wood and wood-based materials. Paper presented to RILEM 57-TSB, Haifa, Israel. June 1985.

5. BRITISH STANDARDS INSTITUTION. Code of practice for the structural use of timber. Part 2. Code of practice for permissible stress design, materials and workmanship. British Standard BS 5268: Part 2. London, BSI, 1984.

6. SMITH, I and WHALE, L.R.J. Sampling of wood for joint tests on the basis of density. Paper 17-17-1, presented at CIB-W18 meeting, Rapperswil, Switzerland, May 1984.

7. LARSEN, H.J. K.W. Johansen's nail tests. Bygningsstatiske Meddelelser. 48:9-30; 1977.

8. SMITH, I. and WHALE, L.R.J. Mechanical properties of nails and their influence on mechanical timber joints subjected to lateral load. Part 1. Background and tests on nails of UK origin. TRADA Research Report 4/85. TRADA, Hughenden Valley, Bucks, July 1985.

9. SMITH, I. and WHALE, L.R.J. Mechanical properties of nails and their influence on mechanical properties of nailed timber joints subjected to lateral load. Part 2. Tests on nails of mainland Europe origin, comparions of results with those of nails of UK origin and conclusions. TRADA Research Report 9/85. TRADA, Hughenden Valley, Bucks, July 1985.

10. WILKINSON, T.L. Analysis of nailed joints with dissimilar members. Journal of Structural Division, ASCE, 98 (ST9) pp 2005-2013. September 1972.

11. JOHANSEN, K.W. Theory of timber connectors. Publ. 9, Bern: International Association of Bridge and Structural Engineering, 1949.

12. MÖLLER, T. En ny metod for berakning av spikforbrand: New method of estimating the bearing strength of nailed wood connectors, (in Swedish with English translation). Rep. No.117. Gothenburg, Sweden: Chalmers Tekniska Hogskolas Handlingar; 1950.

13. CIB. Structural timber design code. 6th. Edition. Publication 66. CIB-W18, 1983.

14. LARSEN, H.J. et al. Draft Eurocode 5: Common unified rules for timber structures. Unpublished report to the Commission of the European Communities by consultative group, August 1986.

15. SMITH, I. Short-term load-deformation relationships for timber joints with dowel type connectors. Ph.D Thesis, CNAA, 1983.

16. LARSEN, H.J. Design of bolted joints. CIB-W18 meeting, Bordeaux, France. October 1979.

# Figure 1 – Load – embedment testing

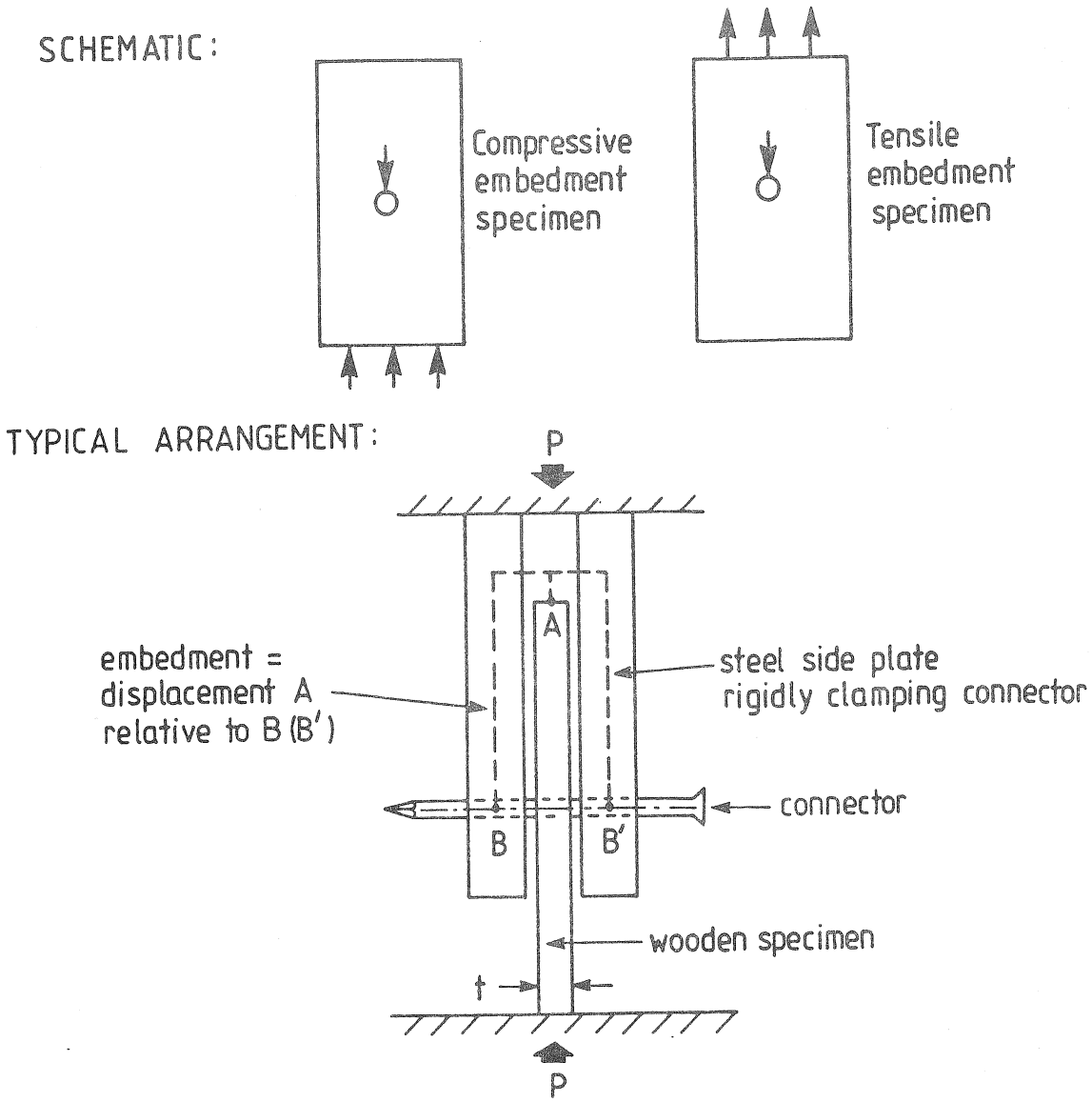

Figure 2 — Density trends in nail embedding strength

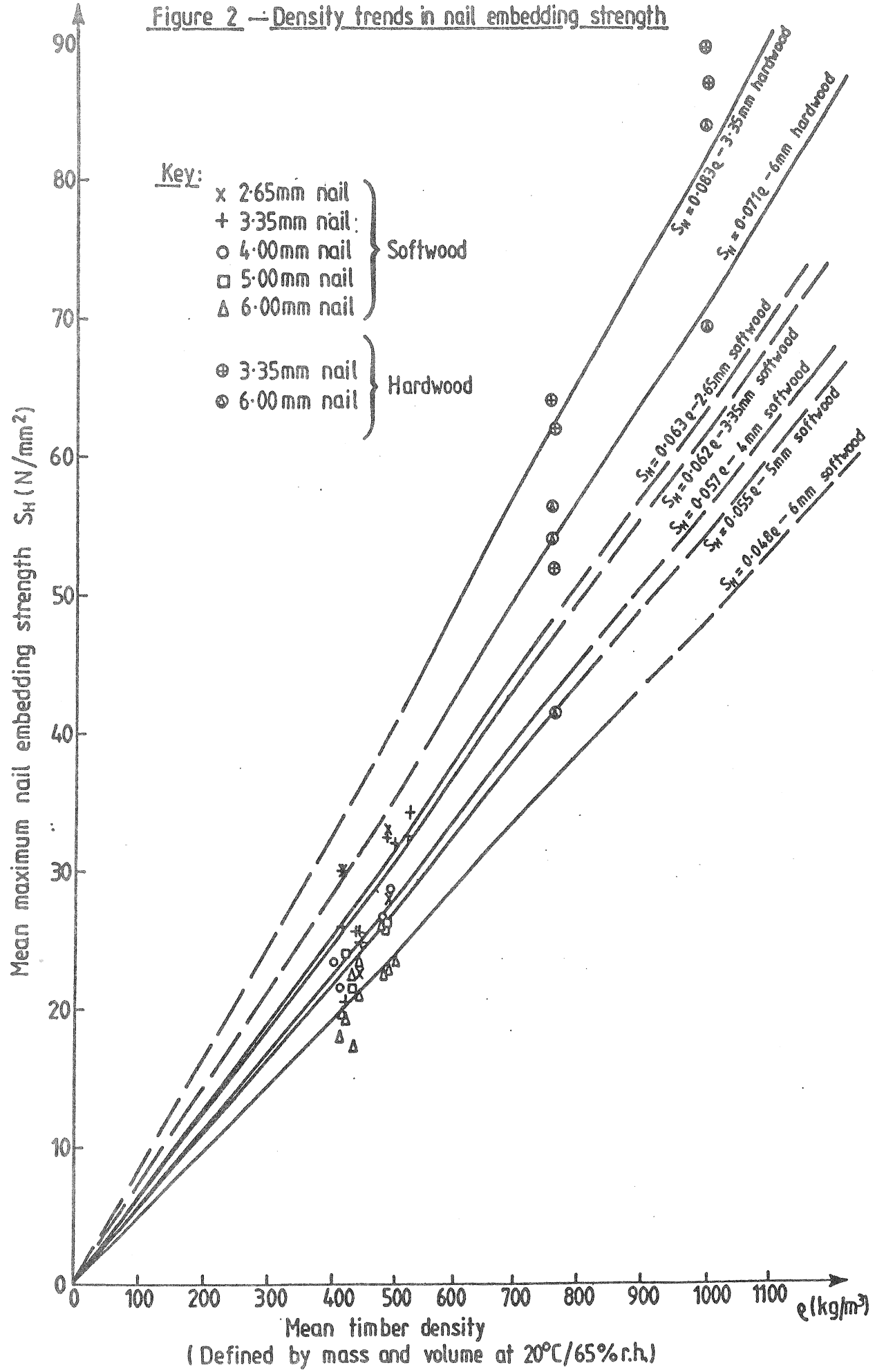

Figure 3 – Log – log plot to determine the magnitude of diameter trends in nail embedding strengths

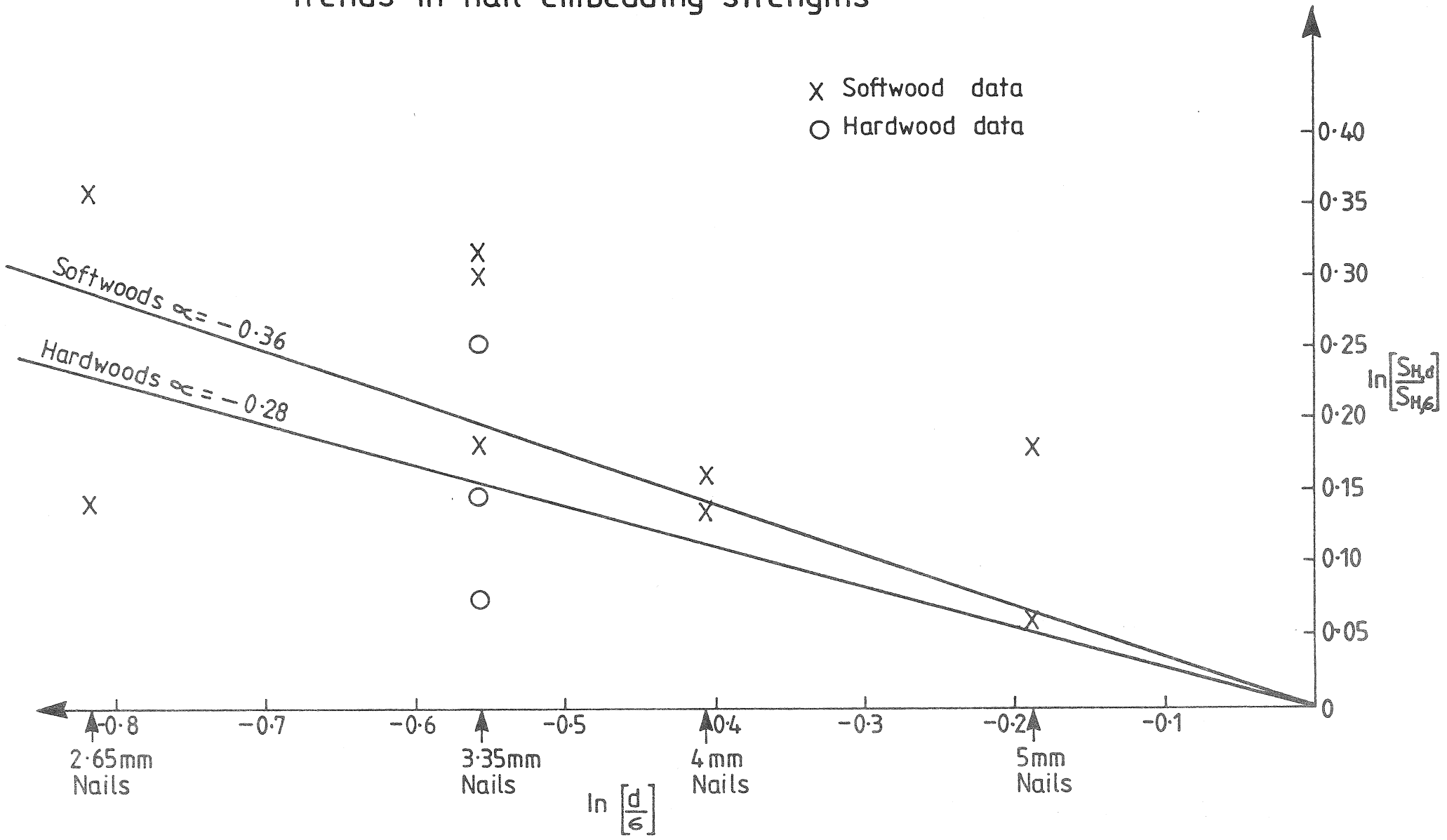

## Figure 4 – Diameter dependence of bolted embedding strengths

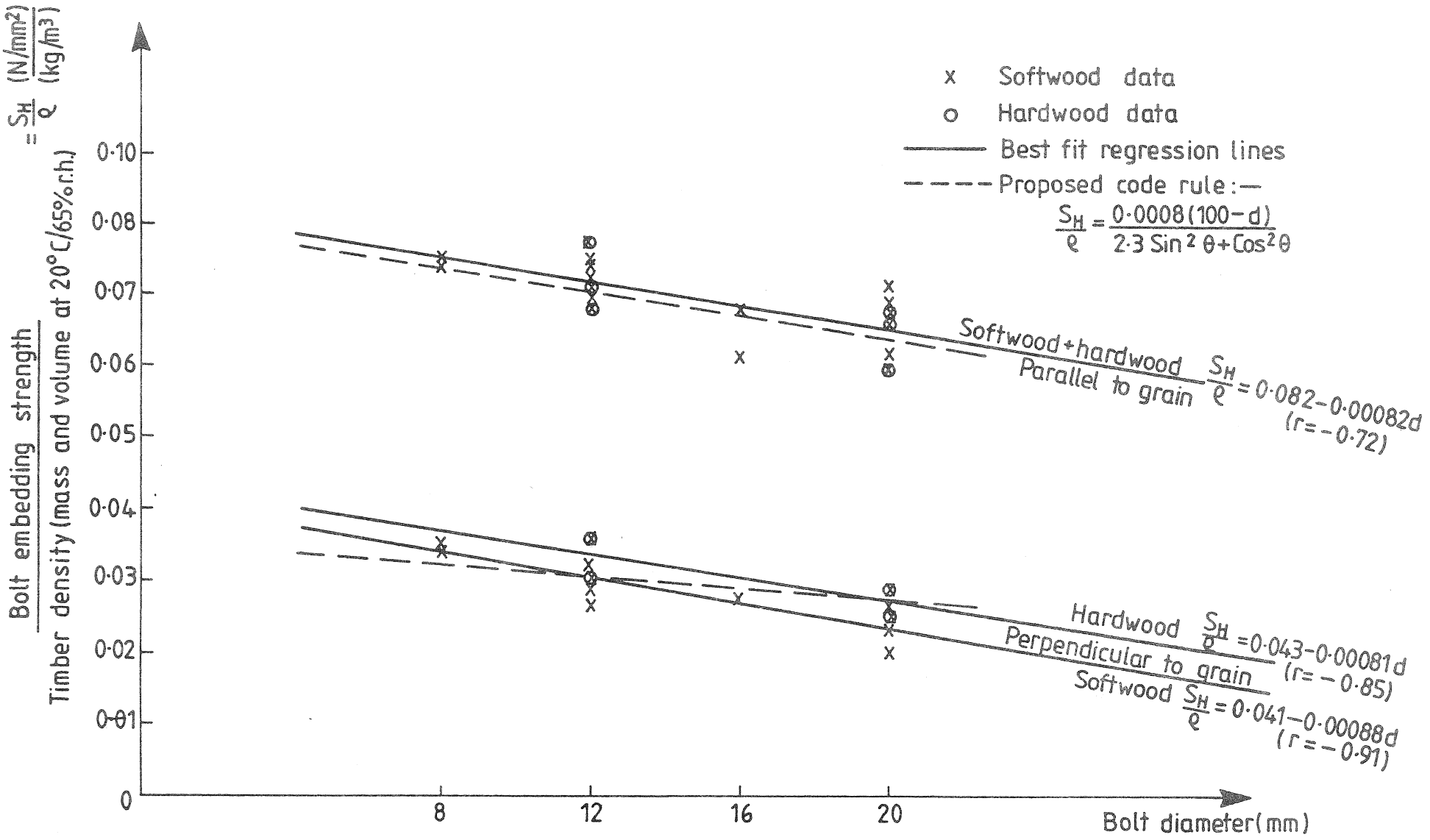

# Figure 5 – Yield theory equations and their associated failure modes

Two-member joints

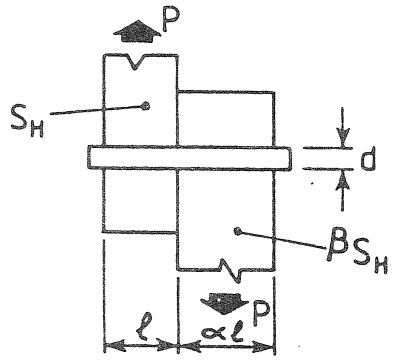


Arrangement

$$P_y = \min \begin{cases} S_H\, d\ell & \text{(a)} \\ S_H\, d\ell\, \alpha\beta \quad \text{(only for two-member joints)} & \text{(b)} \\ S_H\, d\ell\, \alpha\beta/2 \quad \text{(only for three-member joints)} & \text{(c)} \\ S_H\, d\ell \left[\dfrac{\sqrt{2\beta(1+\beta)+4\beta(2+\beta)d^3 f_y/(6 S_H\, d\ell^2)} - \beta}{2+\beta}\right] & \text{(d)} \\ S_H\, d\ell\, \alpha \left[\dfrac{\sqrt{2\beta^2(1+\beta)+4\beta(1+2\beta)d^3 f_y/(6 S_H\, d\alpha^2\ell^2)} - \beta}{2\beta+1}\right] & \text{(e)} \\ \quad \text{(only for two-member joints)} & \\ S_H\, d\ell \left[\dfrac{\sqrt{\beta+2\beta^2(1+\alpha+\alpha^2)+(\beta^3\alpha^2)} - \beta(1+\alpha)}{1+\beta}\right] & \text{(f)} \\ \quad \text{(only for two member joints)} & \\ 4d^2 \sqrt{\dfrac{10\beta S_H}{1+\beta}} \sqrt{\dfrac{f_y}{240}} & \text{(g)} \end{cases}$$

Three-member joints

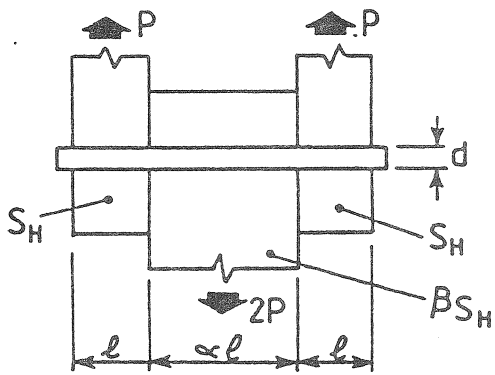


Arrangement



Failure Modes

Mode: 1a 1b 2 3

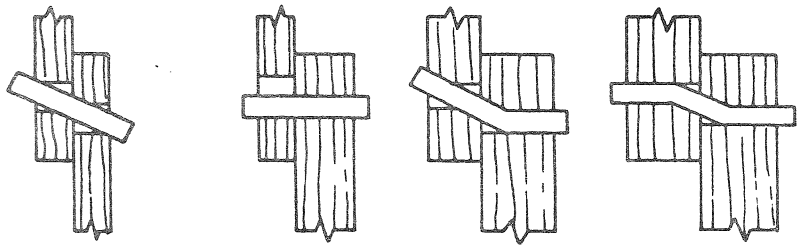

Equation: (f) (a) (b) (d) (e) (g)

Failure Modes

Mode: 1b 1b 2 3

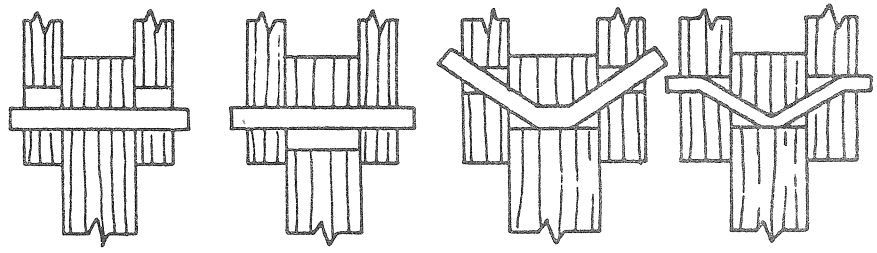

Equation: (a) (c) (d) (g)

# Figure 6 – Simplification of design rules for dowelled joints – Two-member joints

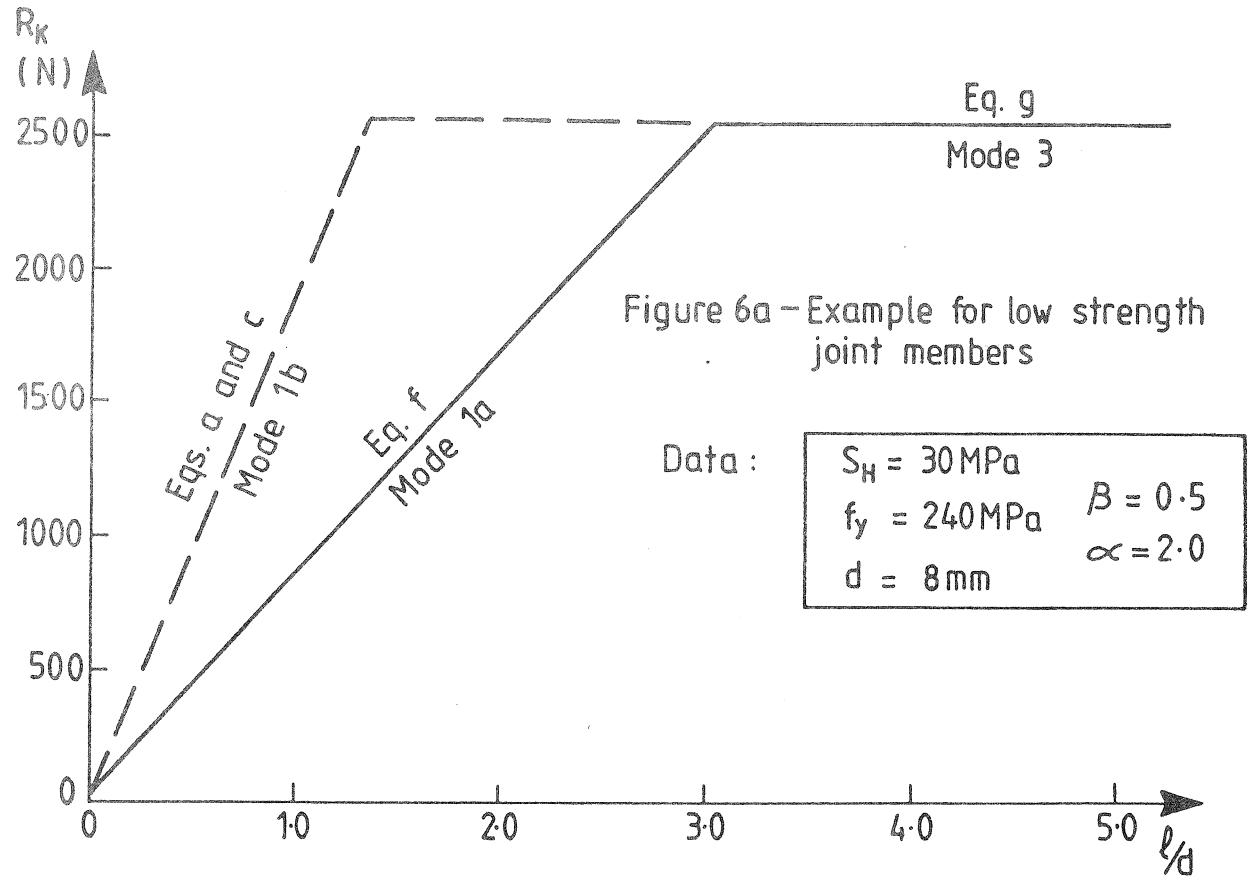


Figure 6a – Example for low strength joint members

Data:

| | |
|---|---|
| $S_H$ = 30 MPa | $\beta$ = 0·5 |
| $f_y$ = 240 MPa | $\alpha$ = 2·0 |
| d = 8 mm | |

Key: ——— Full set of yield theory equations

– – – Curtailed set of rules for bolted joints

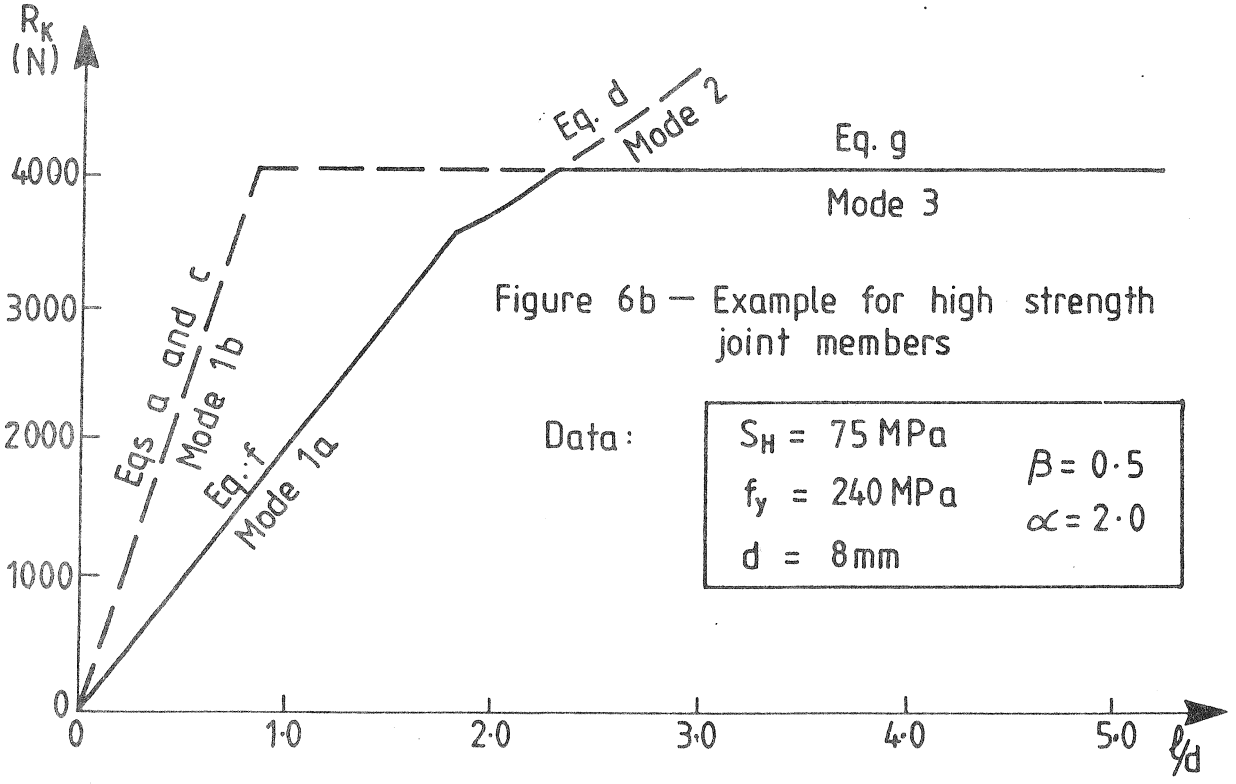


Figure 6b – Example for high strength joint members

Data:

| | |
|---|---|
| $S_H$ = 75 MPa | $\beta$ = 0·5 |
| $f_y$ = 240 MPa | $\alpha$ = 2·0 |
| d = 8 mm | |

# Figure 7 – Simplification of design rules for dowelled joints – Three-member joints

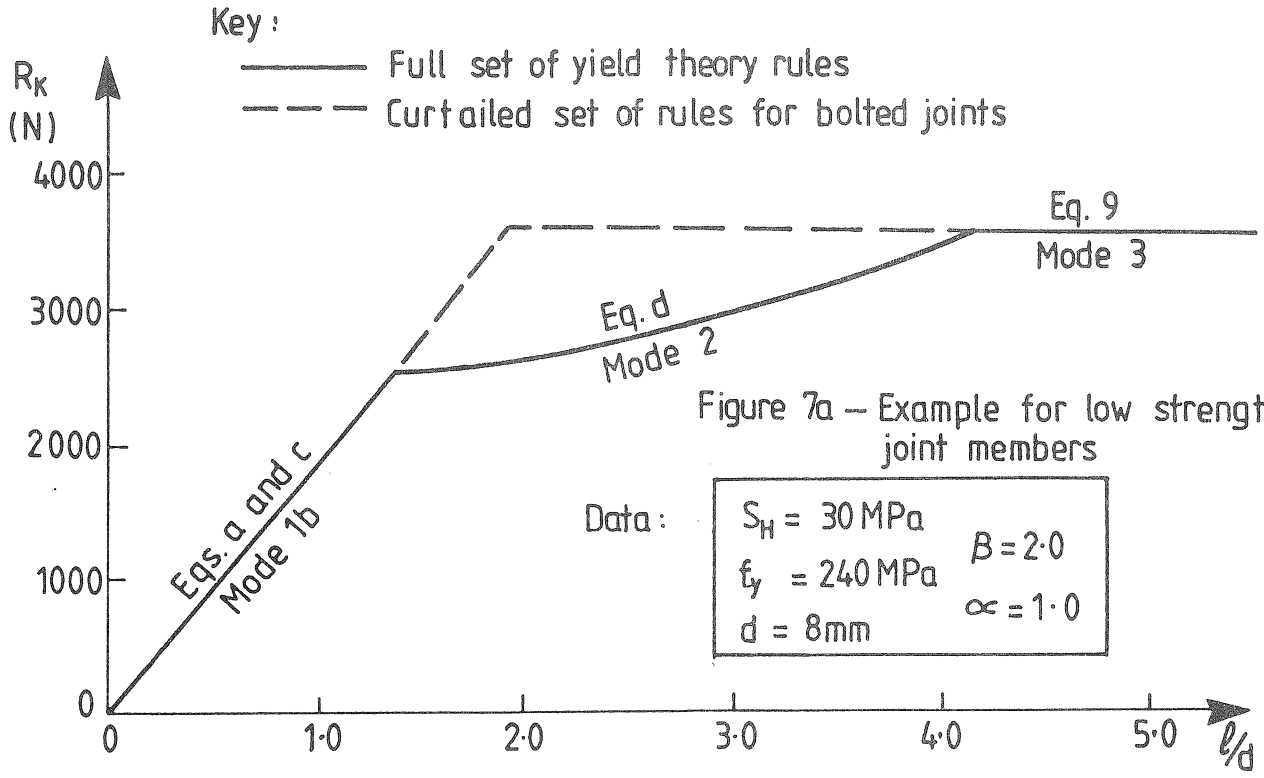


Figure 7a – Example for low strength joint members

Data: $S_H$ = 30 MPa, $f_y$ = 240 MPa, d = 8mm, $\beta$ = 2·0, $\alpha$ = 1·0

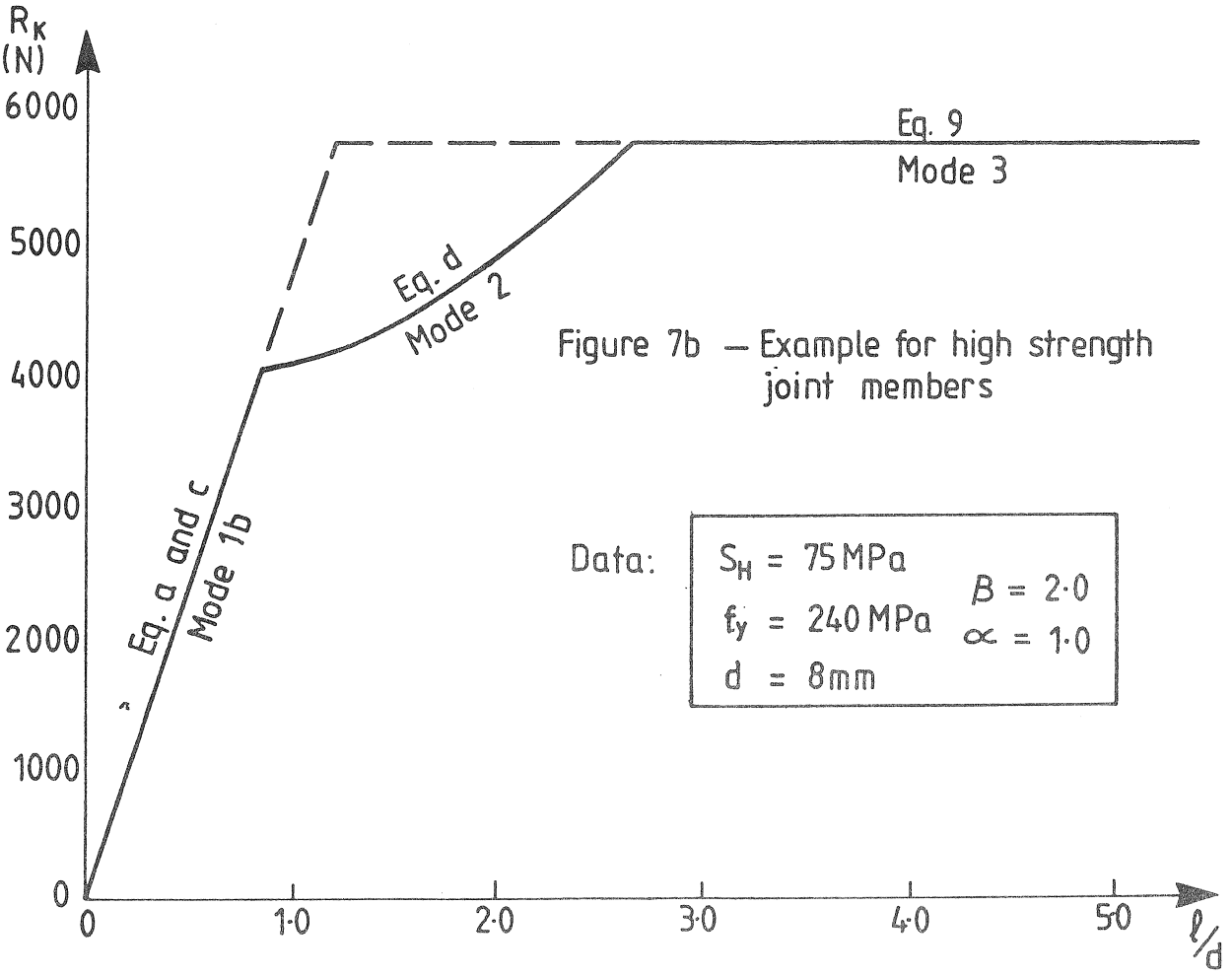


Figure 7b – Example for high strength joint members

Data: $S_H$ = 75 MPa, $f_y$ = 240 MPa, d = 8mm, $\beta$ = 2·0, $\alpha$ = 1·0

Figure 8 – Comparison of bolted and dowelled joint design formulae proposed in this paper, with those of the CIB code – Assuming identical embedding strength data as input

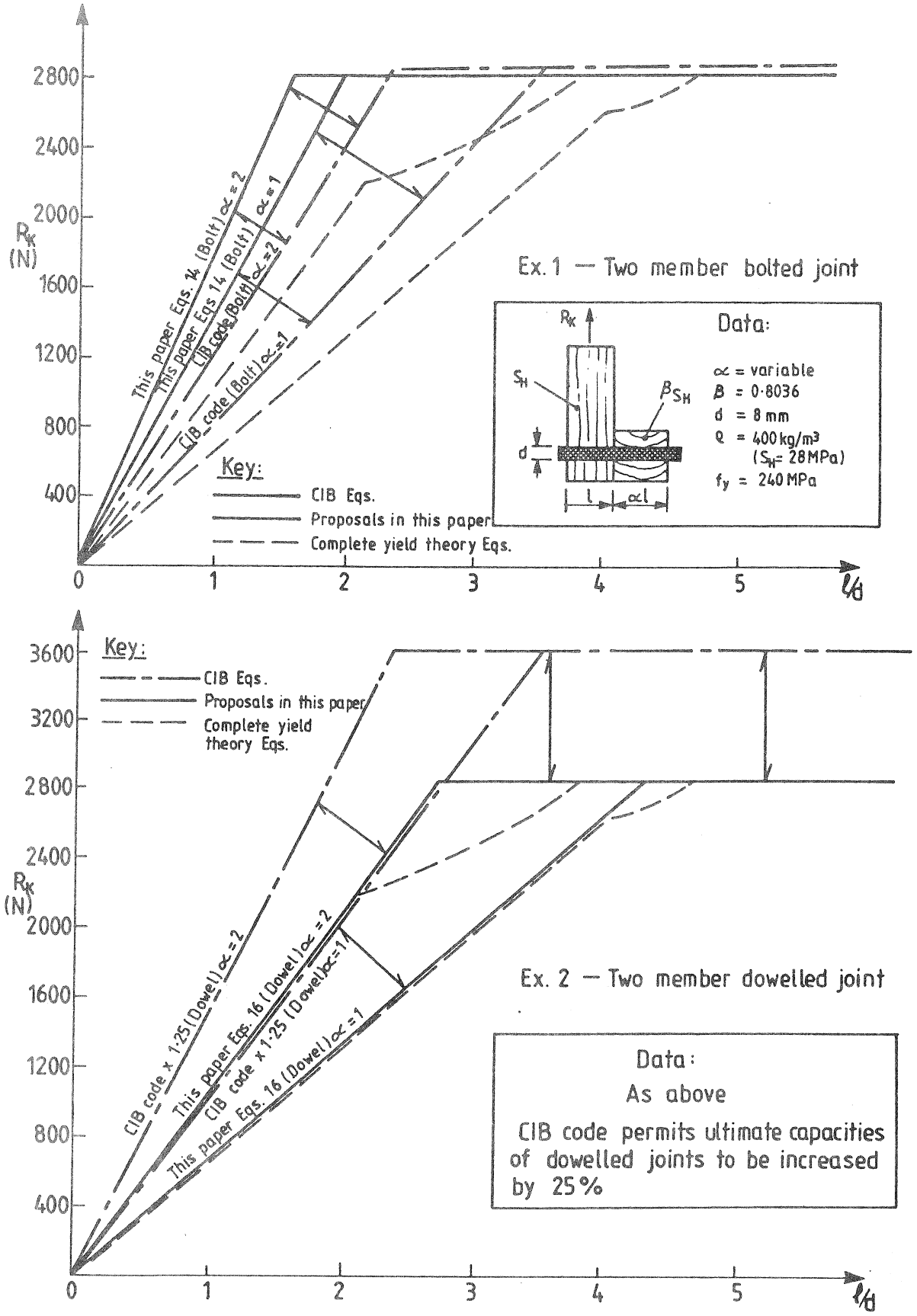

Figure 9 — Comparison of bolted and dowelled joint design formulae proposed in this paper, with those of the CIB code.
— Assuming identical embedding strength data as input.

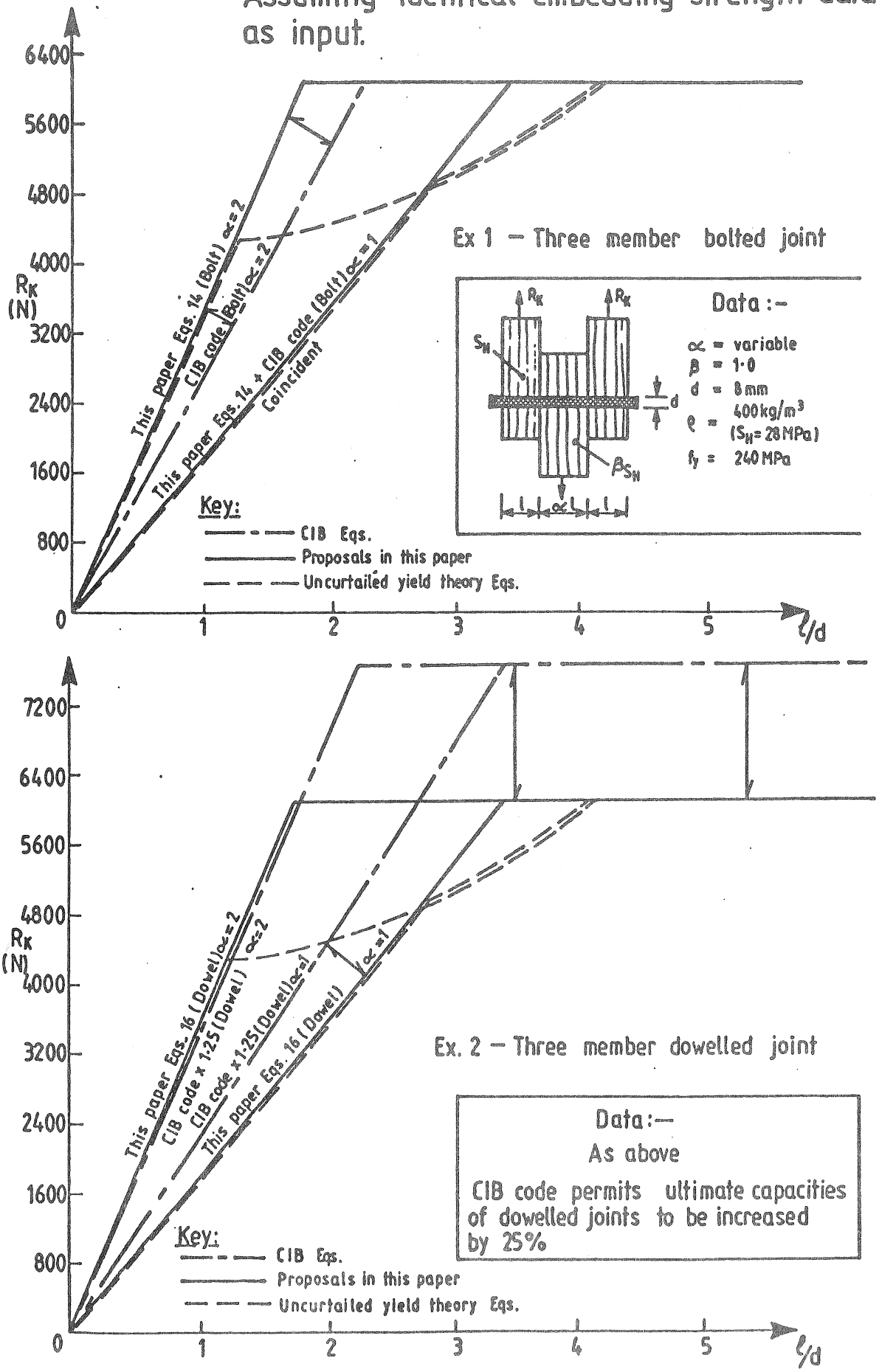

Figure 10 – Comparison of bolted and dowelled joint design formulae proposed in this paper, with those of the CIB code.
— Incorporating differences in design equations and embedding properties.

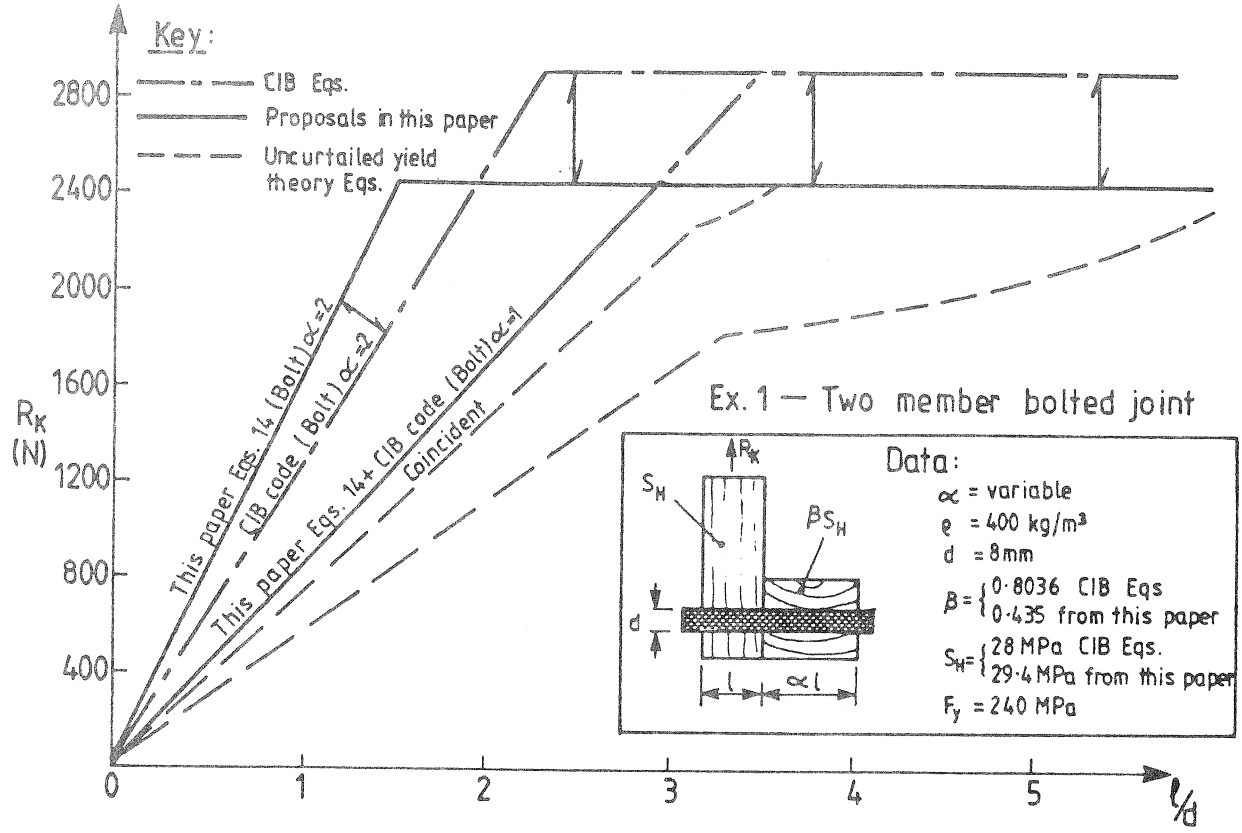


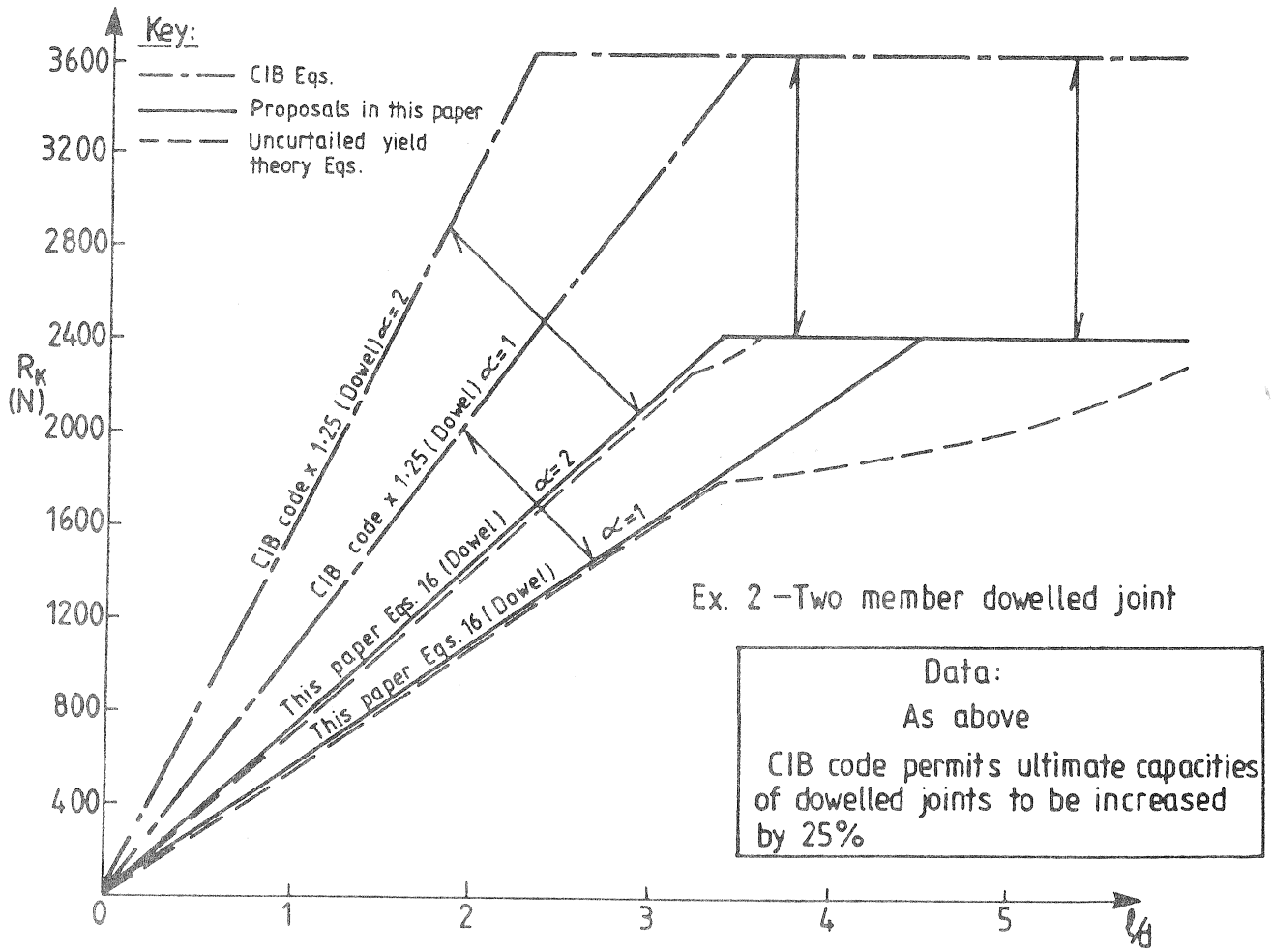

Figure 11 – Comparison of bolted and dowelled joint design formulae proposed in this paper, with those of the CIB code – Incorporating differences in design equations and embedding strengths.

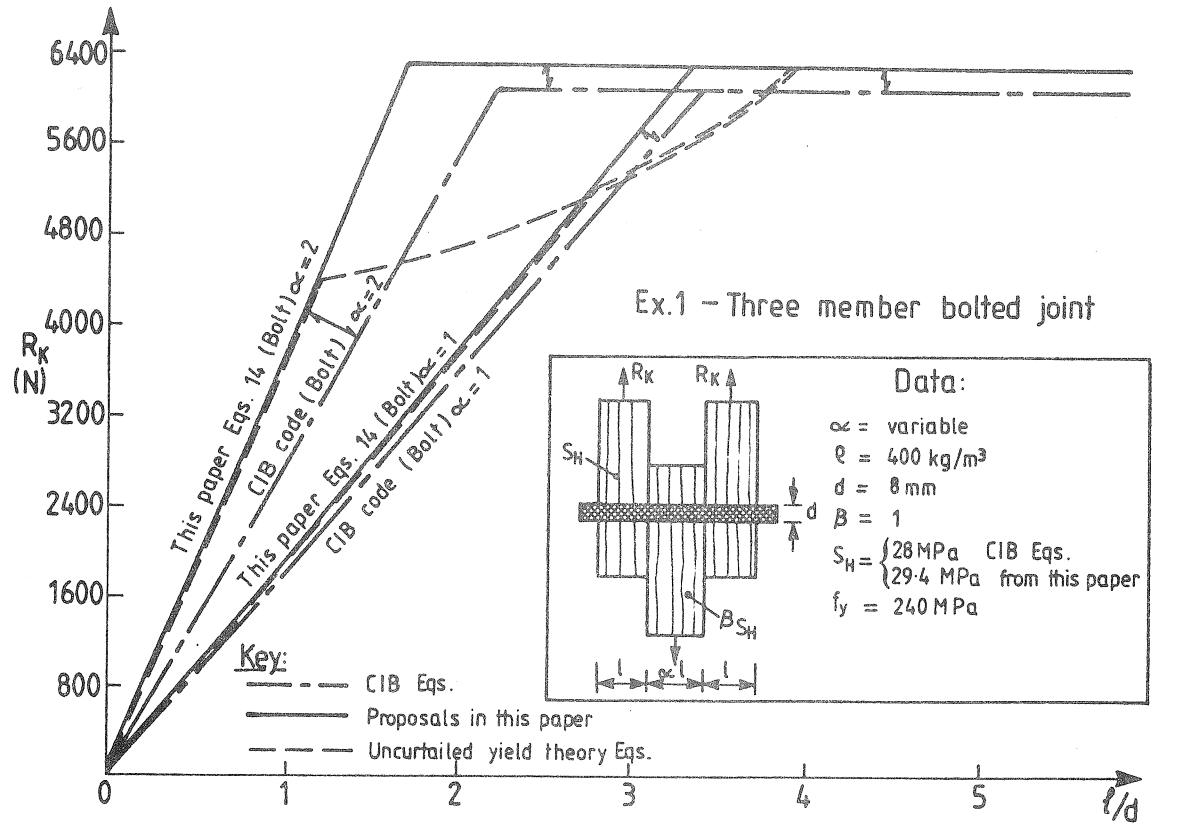


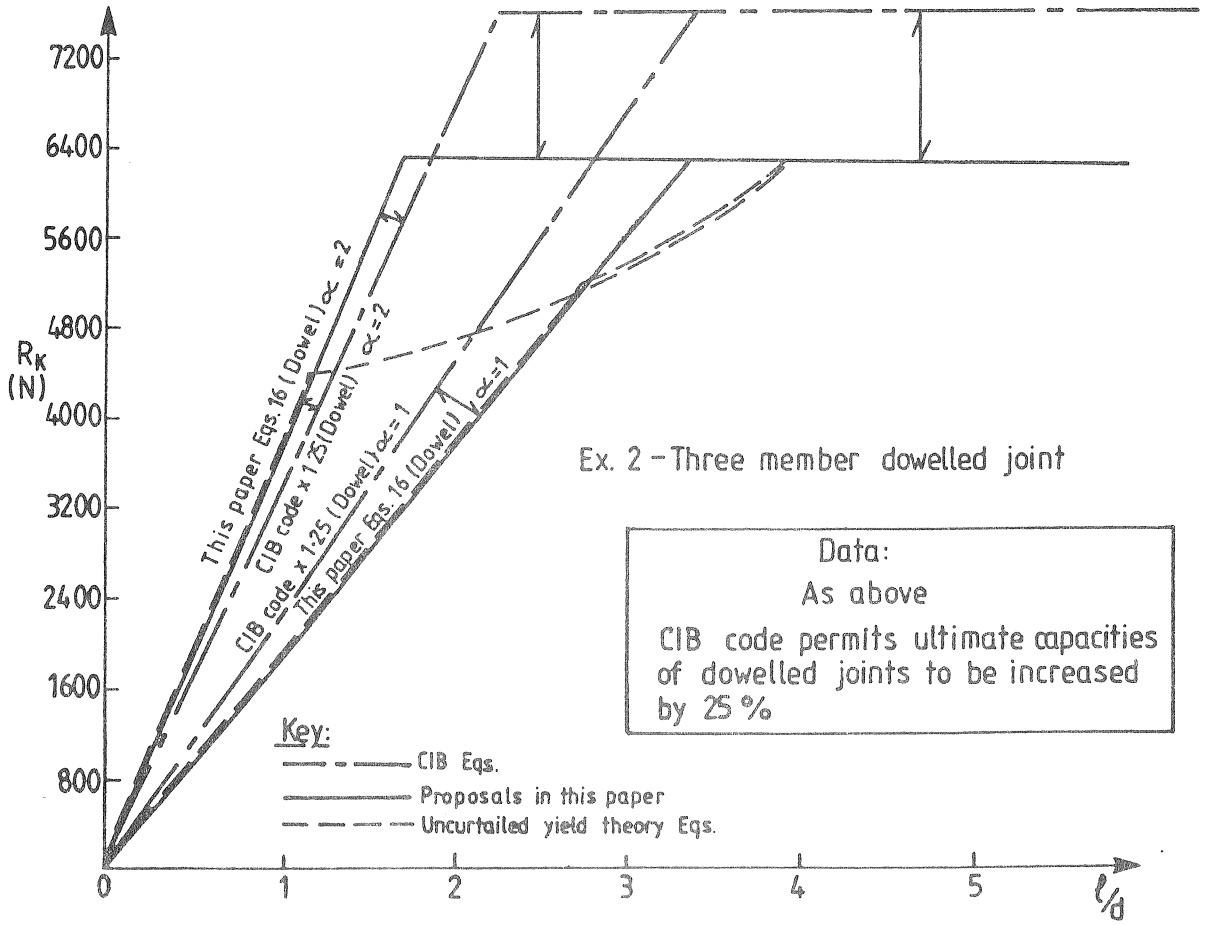

CIB-W18/19-7-7

INTERNATIONAL COUNCIL FOR BUILDING RESEARCH STUDIES AND DOCUMENTATION

WORKING COMMISSION W18 - TIMBER STRUCTURES

# DESIGN OF JOINTS WITH NAIL PLATES - PRINCIPLES -

by

B Norén
Swedish Institute for Wood Technology Research
Sweden

MEETING NINETEEN
FLORENCE
ITALY
SEPTEMBER 1986

B. Norén CIB-W18 19-7-7

# DESIGN OF JOINTS WITH NAIL PLATES - PRINCIPLES

## Introduction

The following is a proposal for Annex to the CIB Structural Timber Design Code. The principles agree with those applied in CIB-W18 14-7-1. That paper is referred to as the main paper.

## Definitions

Joint can be the total juncture of members of the structure, demarcated for the design by cross sections of the connected members. "Joints" can also be sub-joints within the juncture, for example in the case the structural model is supplied with ficticious members. Finally, "joint" can be the "joint-line" or the "joint-plane", defined in the model somewhere between members or between a connector and a member (timber/timber respectively plate/timber joint).

Joint direction is the direction of the projection of the timber/timber-joint in the plates.

Principal directions of a plate are defined by the pattern of nails (usually as parallel to the edges of a rectangular plate).

Plate direction relates the direction of the plate to the (timber/timber) joint (generally by the angle between a principal direction and the joint-direction).

## Principles of design

The joint should be designed thus that the criterion for resistance to load is verified for the following three main types of failure independently:

Plate failure
Grip (anchorage) failure
Wood failure (exclusively)

Failure in the plate itself as well as grip failure can appear in combination with certain wood failure, e.g. compression failure at contact between members. Grip failure can be of different sub-modes. Exclusive wood failure is commonly failure in shear or tension perpendicular to the fibres.

The joint should further be designed to meet possible restrictions for deformation.

## Principles of verification

The demarcation of joints (sub-joints) should correspond reasonably well with the static model for the integrated structure. Forces and moment in the cross-sections should keep joints as well as members in equilibrium.

Friction between members may be utilized to verify resistance at the ultmate limit state (not at exclusive wood failure), provided the clearance between the members does not exceed 2 mm at zero load. The coefficient of friction should not be assumed higher than 0.3.

The stipulation for verification is expressed by a common formula for combined action, for plate failure of the force components in the two principal directions, for grip failure of the shear stresses by translation and rotation.

## Evaluation of forces

Within a joint in which two or more members are connected, the resistance of every connection shall be verified with respect to the strength of the plate, the grip capacity and possible transmission of forces directly from one member to another. Thereby, the total force and moment, transmitted to a member, is assumed to be known (evaluated from the static model of the integrated structure).
The force and moment are divided into one component carried by the plate and one transmitted by contact between the members. This division is based on the assumption that the stresses in the plate as well as in the wood at contact are distributed at constant value (block-distributed) over the part of the joint plane necessary for equilibrium.
(Figures 1 and 2).
In those parts of contact between members where force is transmitted by compression stress, the stress in the plates should be assumed to be nil.

## Added internal forces

On certain conditions (with respect to anisotropi, shape and direction of the plates) slip between members can generate extended compression between members in contact and a correspondent increase of tension in the plates. This may justify assumptions to change the direction of the plate-force slightly in order to facilitate the design. If the component perpendicular to the joint is predominant, one may assume the force to hit the points of gravity of the grip area on both sides of the joint. If, on the contrary, the component in the joint-direction is superior, the force may be shifted to become a shear force in the joint.
Limits for adding internal forces are expected to appear in approvals for the design of specified types of joints.

Notes

Moment in the plate refers to the excentricity of the force with respect either to a point on the timber/timber joint or to the centre of gravity of the plate/timber joint.

For the evaluation of the forces on the plate it is recommended that the joint-direction and the perpendicular direction is chosen as the one cross of coordinate axes and the principal directions of the plate as the other, both with their origon at the (timber/timber) joint. Positive sign of forces and moment shall comply with positive signs of coordinates and angles.

Design values

The verification of the strength of the joint will depend on design values (verification values) of stresses in the plate, the plate/timber joint and the members. To verify plate capacity design values for shear, tension and possibly compression will be used in both principal directions . Further, design values for the shear stress in the plate/timber joint will be needed, referable to the angle between the stress- and the fibre-direction.

Depending on the level of verification stipulated in the national code, design values may be characteristic values or fractions of such. The design values for the plates generally appear in approvals for the various types, while the values for the wood members are found in the timber design code.

## Verification of strength of plate

Reliability against plate failure is verified by a condition for interaction of the components of force in the two principal directions of the plate:

$$\left(\frac{N_a}{N_{aD}}\right)^2 + \left(\frac{N_b}{N_{bD}}\right)^2 \leq 1$$

For each component the highest(!) design value (index D), from the alternatives that the design stress refers to either tension, possibly compression, or shear (p or s respectively) may be used:

$$N_{aD} = \begin{cases} 2b_n p_{aD} \\ 2a_n s_{aD} \end{cases} \qquad N_{bD} = \begin{cases} 2a_n p_{bD} \\ 2b_n s_{bD} \end{cases}$$

The factor 2 refers to the case of two opposite plates. $a_n$ and $b_n$ are the projections in the principal directions of the utilized part of the plate over the joint (figure 3).

Thus, the verification of plate strength is based on 6 design values of stress, 3 in each principal direction (tension, compression and shear).

## Verification of grip strength

It should be verified that the value of maximum shear stress in the plate/timber joint does not exceed the design value. Simultanously, it is accepted for nail-plates of ordinary types, that the shear stress is assumed to have reached constant value over the joint area (A) but having deviating direction depending on possible rotation. The general expression for calculating the grip-shear stress with reference to the centre of rotation (RC) would be:

$$M_{RC} = M_P \pm F_p e_{RC} = \tau \int^{A} r dA$$

A complication is that the design value of the shear stress will depend on the angle between the direction of stress and the directions of the plate and the fibres.

It is in general accepted that the verification is referred to the combined action of a fore and a moment, applied at the centre of gravity (CG) of the joint area and in equilibrium with the force (Fp) and moment (Mp), transmitted by the plate over the timber/timber joint:

$$\tau_F = \frac{F_p}{A} \qquad \tau_M = \frac{M_{CG}}{A \cdot d/4} = \frac{M_P \pm F_p e_{CG}}{A \cdot d/4}$$

Here $e_{CG}$ denotes the distance from the force $F_p$ to CG and d is the distance from the area-element dA to CG:

For a rectangular area, d is the length of the diagonal (figure 4).

Verification of strength of wood

The resistance to failure due to compression, tension or shear in the wood is verified principally as stipulated for timber members in general.
Compression force, transmitted between members, is assumed to be distributed evenly over the contact area. Tension force, transmitted by anchorage of plates, is distributed along an anticipated plane of failure in the fibre direction ("through thickness"). The stress is assumed constant over the projection on that plane of the grip area, over a certain distance outside the projection declining linearily to nil. This distance must not exceed 4 times the length of the grip area projection on a plane perpendicular to the fibre direction, neither exceed the distance to the end of the member.

Shear force is distributed to constant stress over a length in the fibre direction, not exceeding the depth o the timber (perpendicular to the fibre direction). In case the verified plane of failure is (partly) covered by plates, the design value of shear stress may be increasee in proportion to the covered length and the ratio of the design values of shear stress in the plate and the wood.

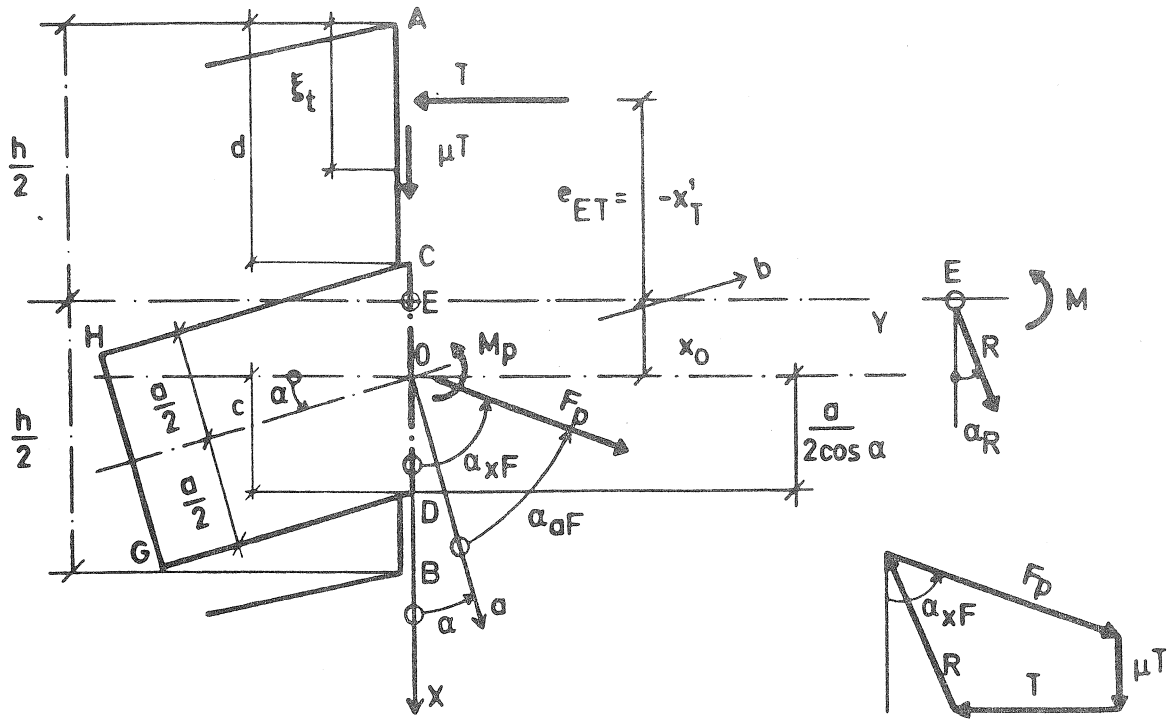


Figure 1. Distribution of the force R and moment M, transmitted over the joint, on force and moment carried by the plate ($F_p$ and $M_p$) and forces transmitted directly between the wood members ((T and μT).

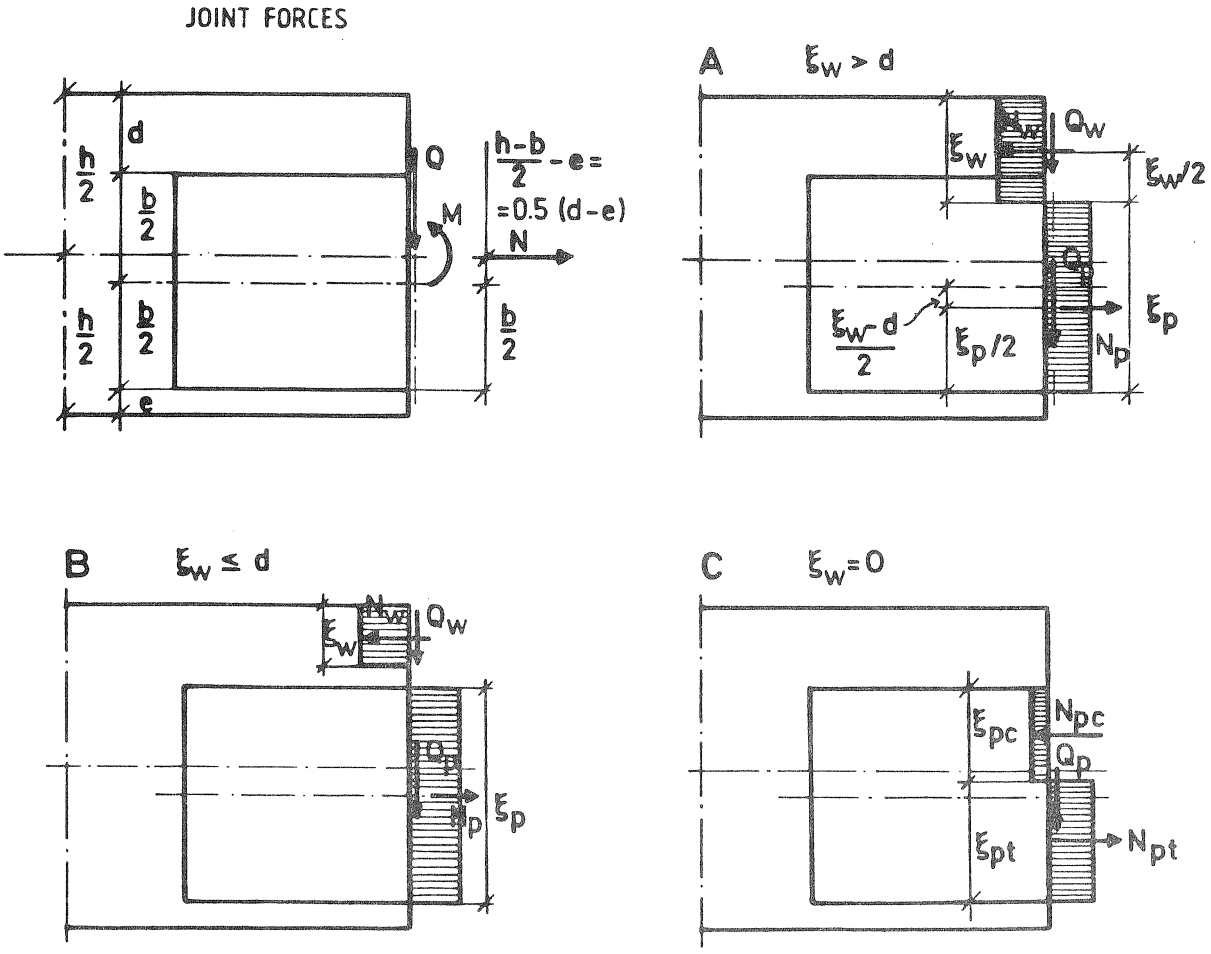


Figure 2. Distribution of joint forces into stress blocks.

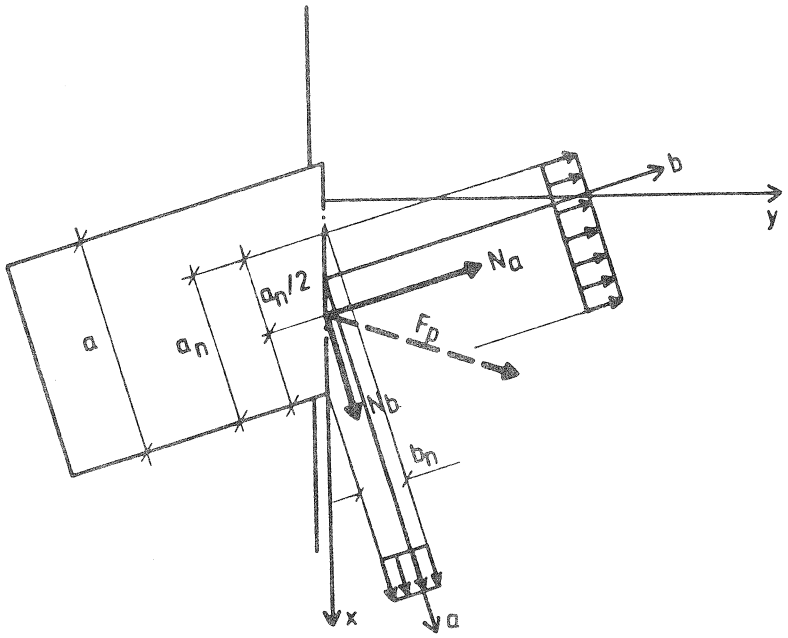


Figure 3. Partly utilized plate.

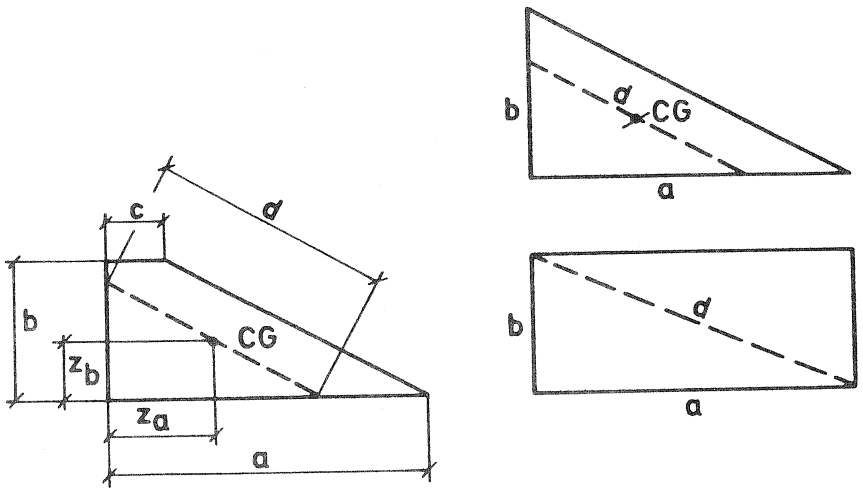


Figure 4. Diagonal d in trapezium, triangle and rectangle for calculation of grip stress at rotation.

CIB-W18/19-7-8

INTERNATIONAL COUNCIL FOR BUILDING RESEARCH STUDIES AND DOCUMENTATION

WORKING COMMISSION W18 - TIMBER STRUCTURES

# SHEAR TESTS FOR NAIL PLATES

by

B Norén
Swedish Institute for Wood Technology Research
Sweden

MEETING NINETEEN
FLORENCE
ITALY
SEPTEMBER 1986

# SHEAR TESTS FOR NAIL PLATES

B. Norén: Shear Test for Nail Plates CIB-W18 19-7-8

Two recognized methods of testing shear strength of nail-plates in timber joints are compared. One is a two-member joint, referred to as the RILEM-test, the other is a three-member joint, referred to as the NKB-test.

One conclusion is that the RILEM-test can, with advantage, be modified for loading in tension, another that the NKB-test on certain condition gives the same result as the RILEM-test.

## THE RILEM SHEAR TEST

### Specimens

The RILEM (CIB/RILEM/ISO) test in single shear is here chosen as the basic test. Although not explicitly stated, it appears from figures of test specimens, as examplified by figure 1, that loading by compression force is a condition. As a matter of fact it had been better if the standard, by showing reversed forces in the figures (as in the corresponding standard for testing shear capacity of nailed joints) had offered the option of using tension loading.

In any case the force is supposed to be applied along the timber/timber joint, thus generating pure shear stress in the plates covering the joint.

A block of wood is glued on to the members, giving them a shape justifying the name "The wellington-test".

When tension forces are applied the cantilever effect is achieved by means of special L-shaped grip-plates. The force is transmitted over a link over the joint, figure 2. Using such grip-plates, designed at the Danish laboratory SBI, seems to offer cheaper and more reliable testing in many cases, possibly also if modified for loading in compression.

## Strength

TABLE 1. Maximum load, $F_{max}$ kN, for 2-member joints. CL = Compression load, TL = Tension Load. 45 = closing gap between members, 135 = opening gap, see figure 3.

| CL | | | | TL | | | |
|---|---|---|---|---|---|---|---|
| 0 | 45 | 90 | 135 | 0 | 45 | 90 | 135 |
| 25.0 | 48.5 | 27.8 | 35.4 | 23.7 | 38.2* | 27.1 | 34.4 |
| 24.7 | 48.7 | 27.7 | 36.3 | 24.4 | 51.1 | 26.9 | 33.7 |
| 24.6 | 47.8 | 27.6 | 35.5 | 24.7 | 40.1* | 26.6 | 35.1 |

* Wood failure

In table 1 the ultimate load is given for the 24 tested 2-member specimens. The values are the maximum (highest) values recorded before the gap between the members are closed. The slip limit of 9 mm introduced, was not in any case decisive.

If these conditions are accepted, the conclusion will be: Loading by compression and loading by tension gave almost the same values of plate-shear strength.

At the 45- and 135-specimens the part of the joint, covered by plates, is 1.41 times longer than in the other specimens. Thus the relation of strength was expected to become 35 to 25. This was confirmed by testing the 135-specimens while the 45-specimens indicated a relation of 50 to 25. This is explained by the special mode of plate failure in the 45-specimens with a component of tension in the principal direction of the plate having high tension strength.

Two 45-specimens (TL) failed due to tension failure in one of the members, according to the slip-curve clearly before the plate shear capacity was obtained. This and the fact that cracks and consequent local grip failure appeared in several of the 45-specimens, indicate that the members should have been sligthly thicker.

## Slip

Slip curves, representative for the specimens loaded in compression (CL), are shown in figure 4. At the angle of plate 45 and 90 the yield in the plates allows the joint to close. In case 45, the joint closed near the slip limit (3 x plate thickness + allowance for irrelevant deformation), in case 90 the maximum load was recorded well before the slip limit and the closing point. In the (initially) opening case 135 and in case 0 the shear yield was comparatively small.

The curves recorded for the specimens loaded in tension (TL) are similar to those loaded in compression, once irrelevant slip in the grips is excluded.

# THE NKB SHEAR TEST*

## Comparison with the RILEM test

The NKB shear test specimen for nail-plates is principally different to the RILEM (etc.) at two points: It is a (symmetric) 3-member specimen, giving the strength of 2 joints. There is nothing stipulated on gap between members.

The gap-stipulation can and and should be introduced for the NKB-test specimen as well. The difference in result by using 2- respectively 3-member joints should be possible to make neglectable once it is seen to in both standards that the capacity of the plate to transmit pure shear between members is obtained. A gap stipulation may help to satisfy this ambition but there will be other conditions, one being to ensure the expected static of the test, another to judge, particularly in the NKB-test, the influence on the plate strength of combined shear and normal stress. Neither of the

---

* This test should not be confused with the test proposed as NORDTEST Standard and well in confirmity to the RILEM test.

mentioned standards give sufficient instruction concerning freedom of translation and rotation at points of application of forces and at supports.

The NKB-type of a 3-member joint is easy to manufacture and handle. This is an advantage and it has been adopted as standard (also by RILEM) for nails, bolts and other connections. Why has it not been accepted for joints with nail-plates as well?

The reason probably is that the nail-plates connect timber edge to edge, while nails, etc., connect it face to face. This makes the nail-plate specimens wider and consequently it is more difficult to apply a pure shear force in the joints. Naturally, one could make them longer and/or provide the side-members with cantilever blocks as used for the "wellington-test". On the other hand, that should make them expensive and of less interest. Another possibility would be to double the 3-member joint and expose it for tension, which is an alternative proposal by RILEM/CIB for the testing of joints with nails.

Anyway, interest has been shown within CIB-W18 for allowance to use the NKB-test as an alternative to the RILEM-test. This is the background of the testing, the result of which is briefed in the following. Simultaneously, it was important to be able to harmonize the considerable number of design values already approved as a result of NKB-test and future values based on the RILEM-test.

## Test specimens and loading

The specimens for the NKB-test were assembled from timber of the same kind (density) and cross-section as used for the RILEM-specimens (CL and TL). Also the plates were equal in type and measures (nominal size 153 x 153). They were all from the same package.

Four types were tested, different with respect to the angle between the plate and the joint: 0, 90, 45 and 135, i.e. the same as tested by the 2-member joints. A further variable was the distance (e) from the joint to the vertical force of reaction to the side-members:

TABLE 2. NKB-specimens, measures in mm.

| | | |
|---|---|---|
| Side member | Thickness | 43 |
| Central " | " | 43 |
| Side " | Width | 120 |
| Central " | " | 237 |
| Length of joint | h(0,90) | 208 |
| | h(45,135) | 231 |
| Plate-covered | $h_p$(0,90) | 152 |
| | $h_p$ (45,135) | 215 |
| Specimen height | | h + 45 + 45 |

e = 10, 30, 60 mm. The supports were designed to keep this force parallel to the joint (vertical), that is the ends of the side-members were preliminary free to move in the direction perpendicular to the joint (horizontal).

Some tests were carried out like this without any horizontal restraint at the bottom of the specimen, the lower end of the central member reinforced against stresses perpendicular to the fibres. These specimens, as expected, failed before the plate strength was utilized. Other specimens (Series A) were tested supplied with a special tie of steel which prevented horizontal movement of the side members at the level of the lower end of the joints. The reaction force H from the tie was recorded continuously.

A Series B of tests with horizontal restraint by heavy blocks was carried out to imitate a simple standard possibility. In that the reaction force H was not recorded. The combinations of variables appear from the result matrix table 3.

total capacity of the joint was achieved. (This was not in accordance with the secondary purpose of the testing: to check the total capacity of the joint by applying the verification rules of CIB-W18 14-7-1.)

The 135-specimens of the NKB-type gave all very much the same load at maximum, about 10 % higher than the values from the RILEM specimens. They are of the opening-gap type with respect to the link effect and, due to moment, opening at the lower end of the joint, closing at the top end. Only in one specimen (e = 60) there was contact at the top of one joint (just) before maximum load was reached.

A conclusion, common for the investigated types of tests, is:

Information on plate-shear strength or yield should be sought from the load-slip curve before contact between the members is established. Extrapolation of the curve from the point of contact will be too arbitrary, and, anyway, does not simulate any real situation. If the influence of a larger initial gap between members is looked for, it is best to repeat the test, because the total load-slip curve may be changed due to a different mode of failure in the plate over the joint.

## Statics

The statics of the NKB-test and the necessary force (H) to prevent horizontal displacement at the supports is dealt with in the Appendix.

## CONCLUSION

Several conclusions may be drawn from the described testing. Three important are:

1. The RILEM-test performed at tension loading should also be accepted in a standard.

2. The NKB 3-member joints (4 plates) should be an acceptable substitute for the RILEM 2-member joints (2 plates), for loading in compression or, possibly, in tension.

3. The load-slip curve from tests of specimens, RILEM or NKB, with a certain (2 mm) initial gap between the members, should not be extrapolated beyond the point of contact between the members.

## REFERENCES

1 Design of Joints with Nail Plates, Second edition. CIB-W18 14-7-1.

2 Testing Methods of Timber. Annex 1A: Punched metal plate fasteners. Final recommendation 3TT-1A Sept. 1981. (CIB/RILEM).

3 Testing of punched metal plate fastners. ISO/TC165 N96 1986 (CIB/RILEM).

4 NKB-skrift nr 13 November 1970. The Nordic Committe on Building Regulations NKB.

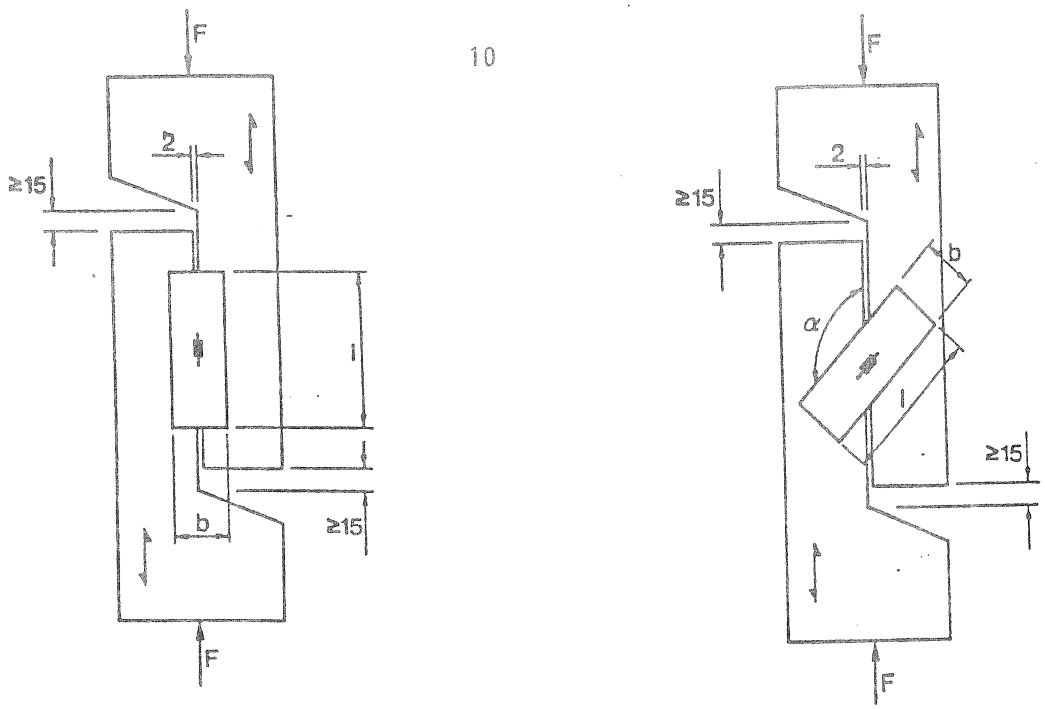


Figure 1. Two-member joint for shear testing by compression load (CL). CIB/RILEM and ISO.

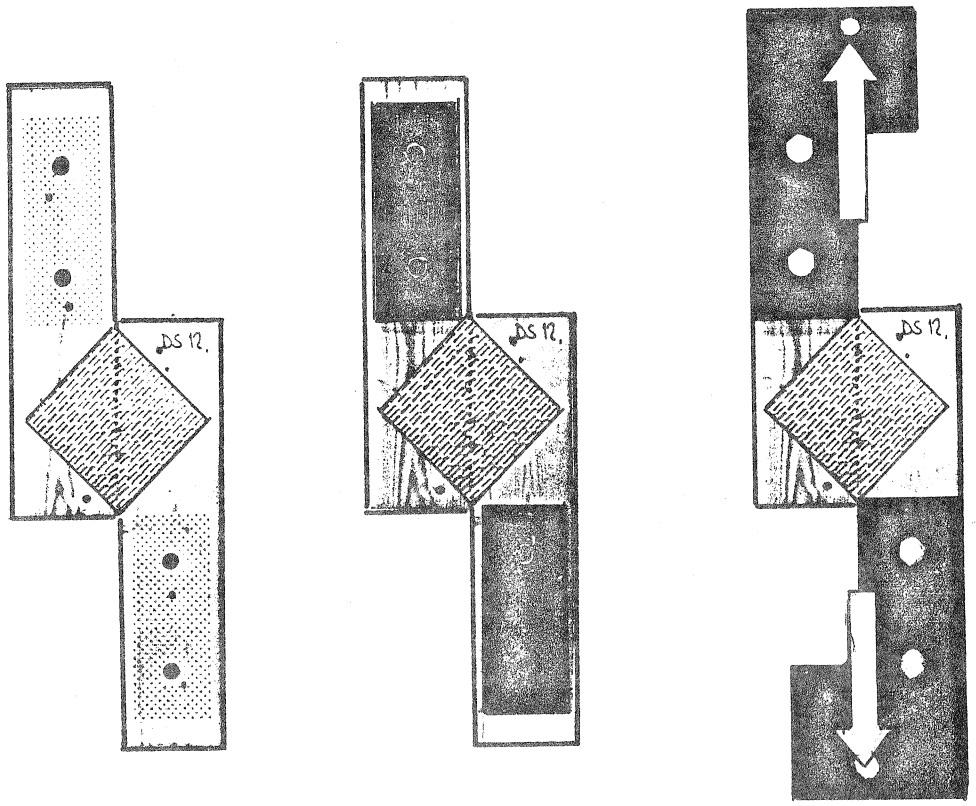


Figure 2. Two-member joint for shear testing by tension load (TL). Denmark and Sweden.

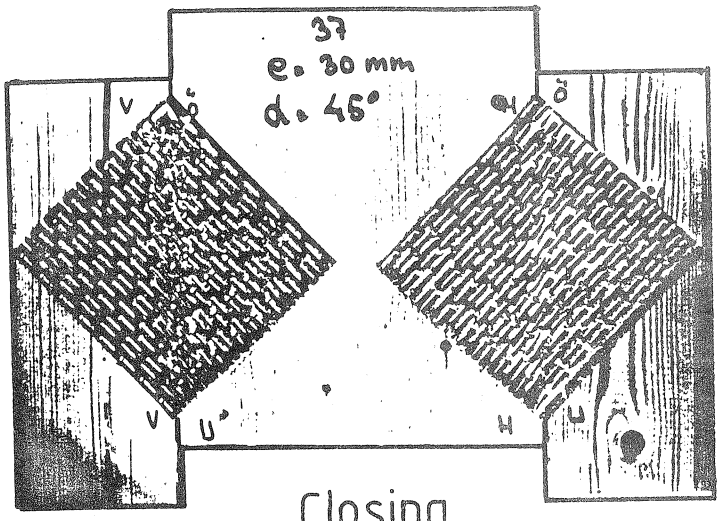


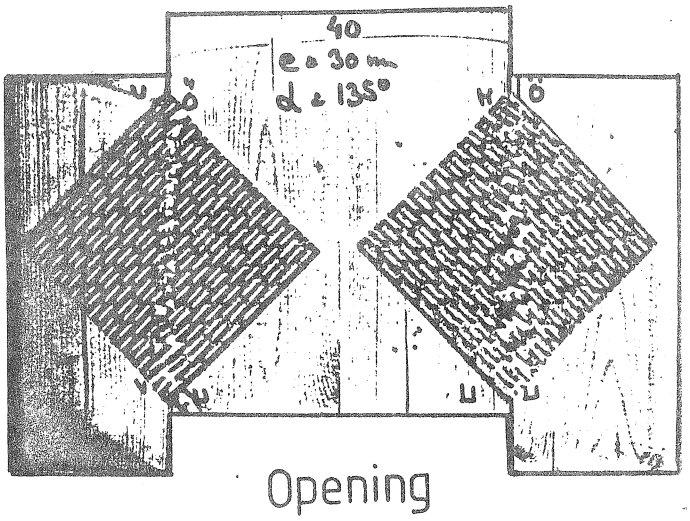


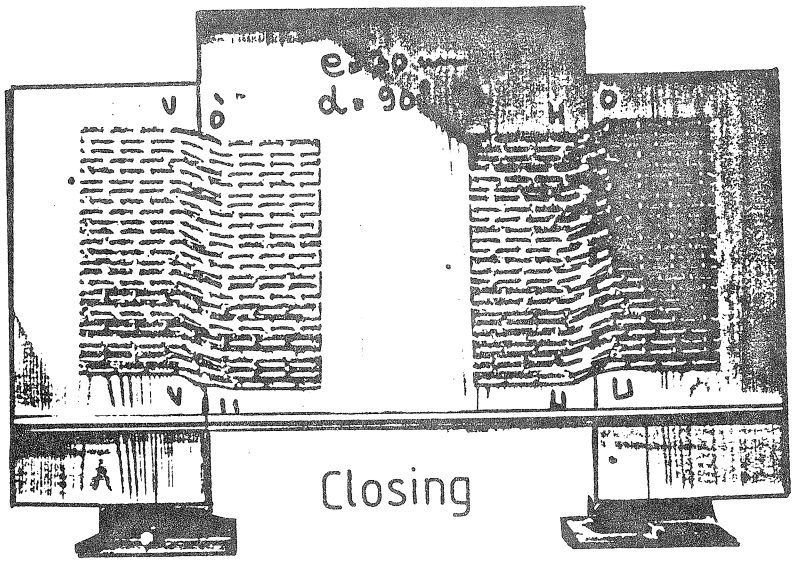


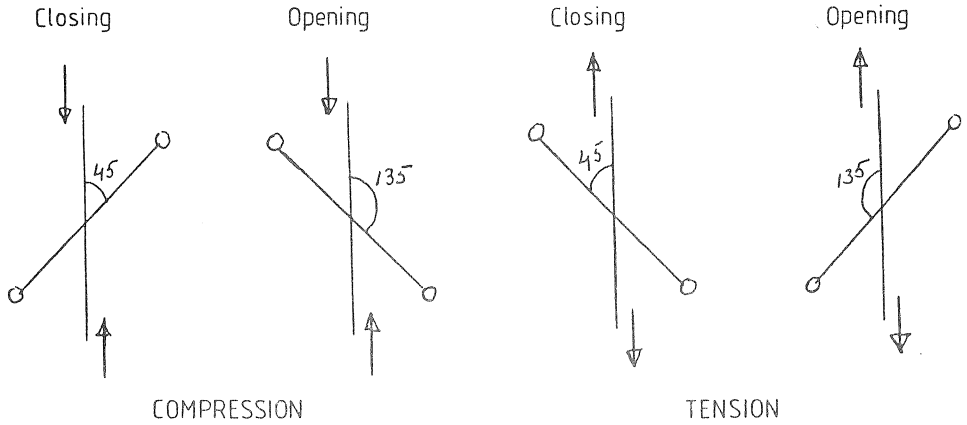


Figure 3. Depending on the angle between the principal direction (a) of the plate and the joint, the link-effect generated by the slip will close (45) or open (135) a gap in the joint.

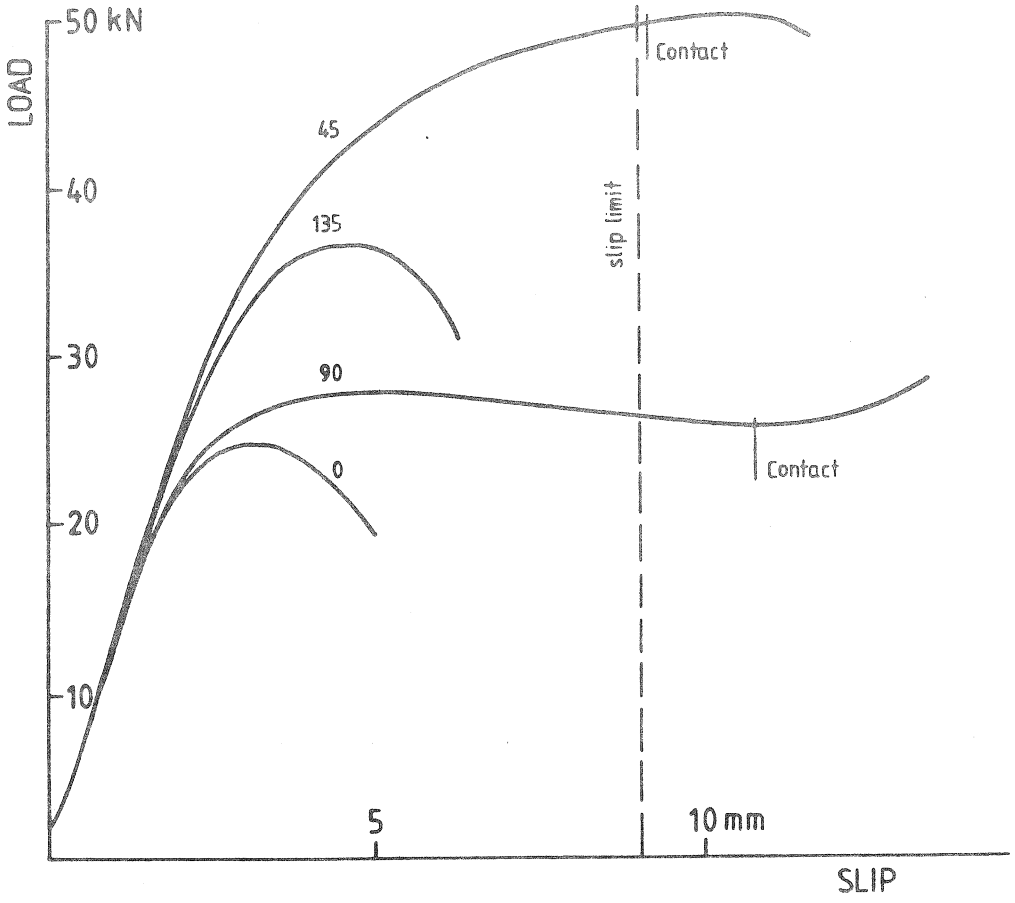


Figure 4. Load-displacement curves for RILEM-specimens loaded in compression (CL). The displacement is measured as machine-head movement but is in this case essentially slip in the joint.

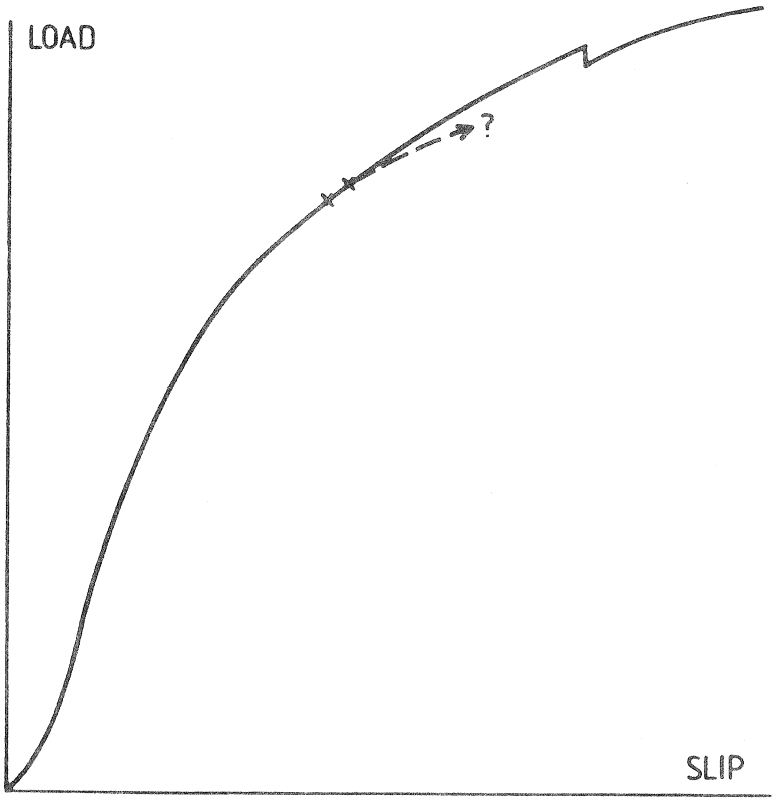


Figure 5. Load-slip curve for a specimen A 45/60. It is not safe to judge the ultimate shear capacity of the plates by extrapolation from the points of contact (X).

## Statics of the NKB Shear Test

External and internal forces acting on the NKB-specimen and its parts are shown in figures A1 and A2. For verification of strength in the general case the method presented in "Design of joints with Nail Plates", CIB-W18 14-7-1 (1980) is applicable.

Here is assumed that the gap between members is open, i.e. T = O. The condition for balance with respect to rotation which eventually will close the gap at the top of the joints and open it at the low end, is assumed to be that the resultant of the forces H and F passes through the middle of the joint. Thus

$$H/F = e/(h/2 + f)$$

Here e is the distance of F to the joint and f is the distance of H to the lower end of the joint.

In the A-series the horizontal restraint was applied to give f = O:

$H/F = e/(h/2) = e/104$ and $e/115$ for the 0,90- resp. the 45,135-specimens.

The values of vertical support excentricity, e = 10, 30 and 60, then correspond to an ideal horizontal force H of about 0.1 F, 0.3 F and 0.6 F, keeping the joint in balance. If the value of H is less, the gap will increase at the bottom and decrease at the top of the joints due to the yield in the plate to the moment, and vice versa if H is applied to a value higher than corresponding to balance.

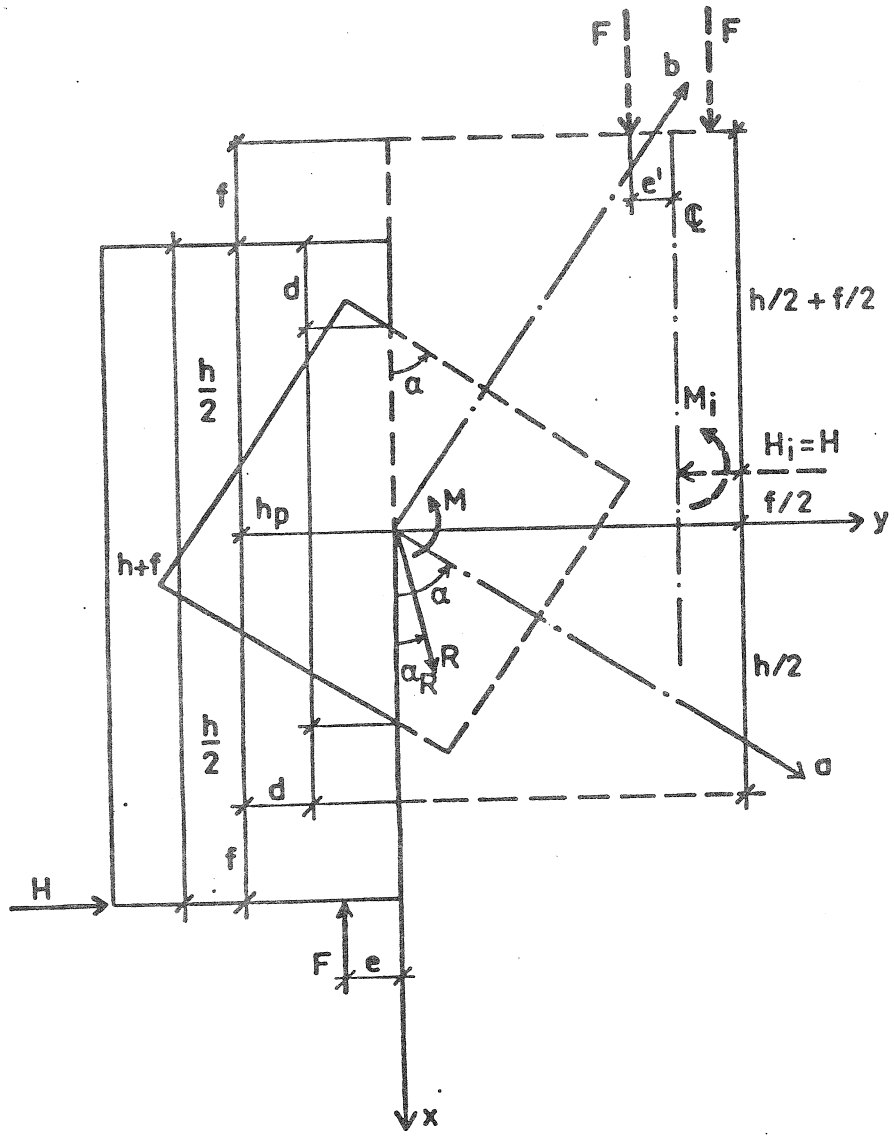


Figure A1. NKB-test. Forces and moment applied on the side-member.

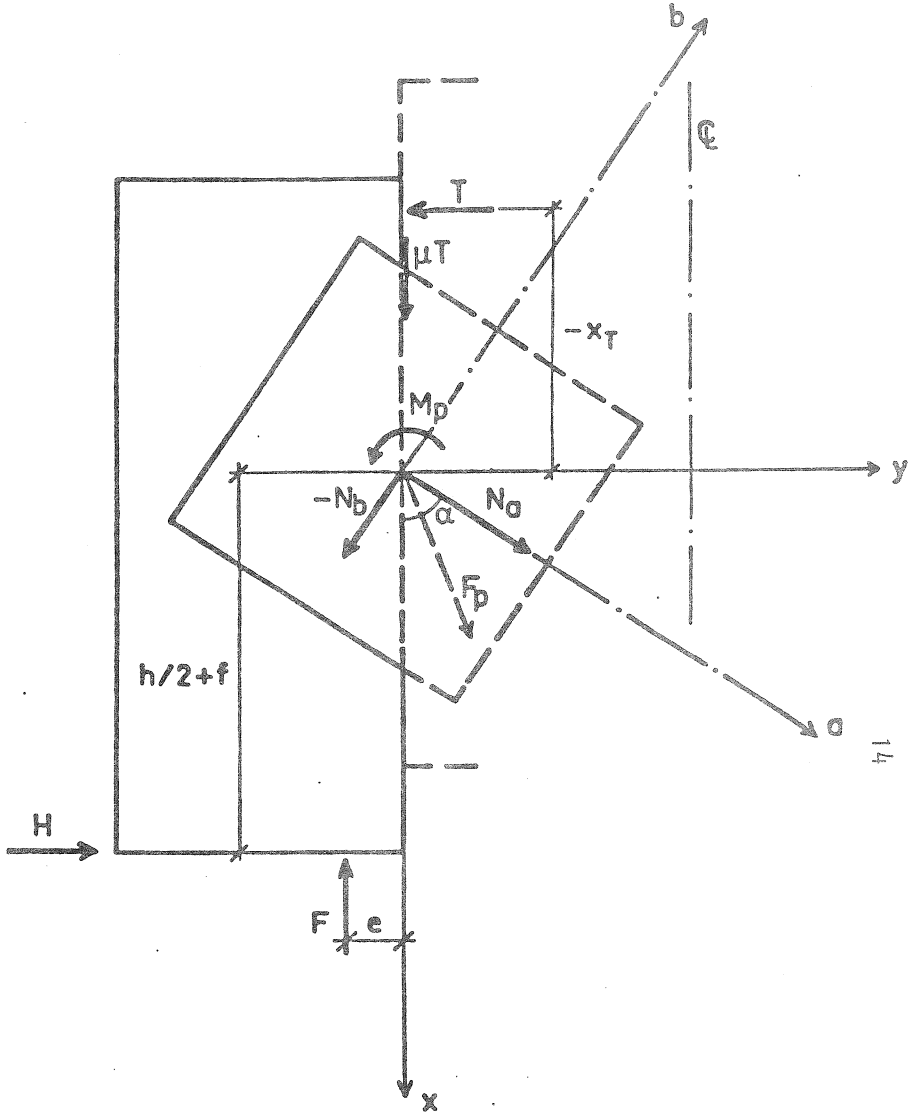


Figure A2. NKB-test. Division of forces and moment in the joint on plate and members.

Figure A3 shows the F/H-curves recorded for the plate-angle O. Due to the pre-straining of the tie the moment in the plate will be reversed to normal from the start. At e = 10 the moment approaches zero (balance) in time before failure. The curves for e = 30 show a slight deficit of H, but the corresponding moment in the plate is too small to change the original gap significantly. However, at e = 60 the value of the generated force H in the tie is not sufficient to prevent the plate from buckling and the decrease of the gap in the top of the joint was made visible.

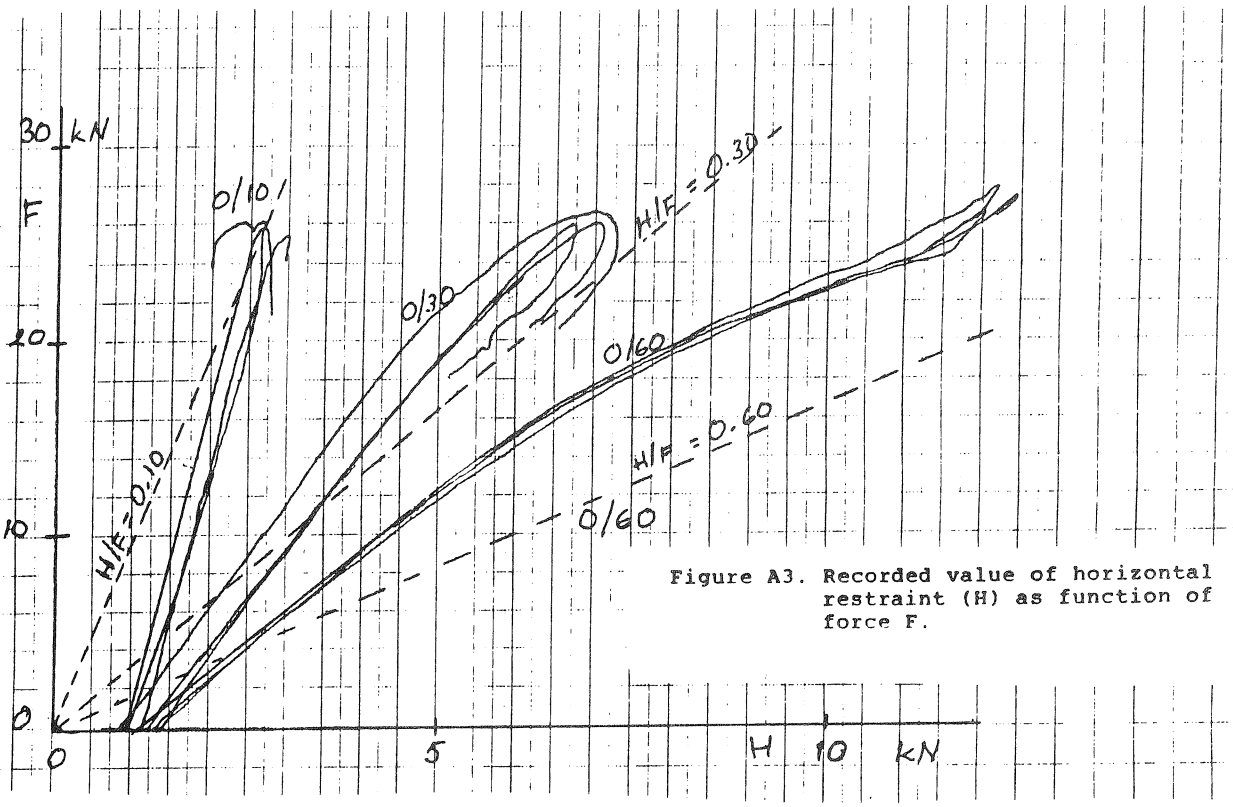


Figure A3. Recorded value of horizontal restraint (H) as function of force F.

CIB-W18/19-7-9

INTERNATIONAL COUNCIL FOR BUILDING RESEARCH STUDIES AND DOCUMENTATION

WORKING COMMISSION W18 - TIMBER STRUCTURES

# ADVANCES IN TECHNOLOGY OF JOINTS FOR LAMINATED TIMBER
## - ANALYSES OF THE STRUCTURAL BEHAVIOUR -

by

M Piazza and G Turrini
University of Padua
Italy

MEETING NINETEEN
FLORENCE
ITALY
SEPTEMBER 1986

MAURIZIO PIAZZA, GIANCARLO TURRINI
Istituto di Scienza e Tecnica delle Costruzioni
of the University of Padua

# ADVANCES IN TECHNOLOGY OF JOINTS FOR LAMINATED TIMBER. ANALYSES OF THE STRUCTURAL BEHAVIOUR.

*Summary.*

*The initial results of a programme of research orientated towards the individualization of the behaviour of the joints in glued-laminated timber will be reported, with particular regard to eventual dissipative capability concerning the design of seismic-resistant typologies. The possibility of realizing joints consisting of glued metallic elements whose behaviour in fields of large alternate displacements is of particular interest, will be viewed.*

*Examples of techniques of assembly in which earthquake-resistant wood structures with concentrated or diffused ductility may be realized are discussed.*

**1.** In the design and realization of important timber, solid wood or glued-laminated structures, the structural joint always assumes a more fundamental importance. This in fact appears to be, apart from an element of rationalization in building processes and techniques af assembly, also and above all the element conditioning both the resistance and global static behaviour of the structure in which it is inserted.

It is well-known how structural joints can, among other things, influence in a particular way the behaviour of the whole structure with regard to phenomena of fatigue or loadings both of short duration or constant in time; in any case the design of the wood structure cannot be separated from the influential choice of the typology of those joints.

Apart from those aspects already well-known on the importance

of the structural joints, it would now perhaps be appropriate to examine the particularly interesting role the same joint can play in the field of seismic-resistant wood structures.

*Wood* material on the basis of its typical behaviour regarding fracture must be classified according to its use in seismic-resistant structures, as elastic-brittle material and therefore "non-dissipating". Such a consideration brings us naturally to an initial penalization of the wood if used without special expedients as a material for the realization of seismic-resistant structures.

In respect to this it might also be interesting to refer to a proposal for a "Technical Code For Construction In Seismic Zones" put into effect in 1985 by the *National Committee for Earthquake Defense* in collaboration with *The National Research Council.* In the short chapter dedicated to wood structures the same material is classified according to seismic design as having brittle and insignificant dissipative capacities and consequently is given a "normal value" of the "*structural behavioural factor*" equal to 1. The attempt to realize a sufficient concentrated energetic dissipation in the structural joints seems therefore quite justified: such behaviour is connected to the possible realization of appropriate typologies of joints which are also quite different from those actually in use and which are able to guarantee a rational dissipative behaviour of the structural elements in the field of large alternate displacements. Naturally the relative seismic design, for which they can then adopt structural behavioural factors even notably greater than 1, must be based on reliable behavioural laws of the dissipative elements produced as results of adequate experimental tests.

A research programme orientated towards the individualization of new design elements for glued-laminated wood and the determination of behavioural laws governing elementary couplings, above all in the field of large alternate displacements, is in process at the *Istituto di Scienza e Tecnica delle Costruzioni* of the University of Padua, whose object is to find new design-elements for wood joints and to fix their behavioural laws also in relation to problems of an energetic dissipation.

The research obviously foresees a general programme of direct experimentation on physical samples and models as well as the introduction of numerical models which, set according to physical tests, permit a completion and deepening of the research through

a bigger, but certainly simpler, numerical testing.

The present paper refers in synthetic form to the initial results concerning the behaviour of particular typologies of joints and presents a general programme of research which is being brought to completion.

**2.** The search for ductility concentrated inside the joints, or that resulting from the structural union of wood elements, has brought our attention to connecting systems which are based essentially on the use of steel as the usual material for the connection. The use of steel components in connections between wood elements is by now well-accepted. It should be noted how we have sufficient knowledge of static behaviour concerning states of monotonically increasing stress up to collapse, to permit the normalization of their use in relation to reliable safety criteria.

On the other hand our knowledge concerning the behaviour of the same structural elements in the field of large and also alternate displacements is still lacking in certain respects. Such a behaviour interests the design of earthquake-resistant structures.

The by now classic typologies or "dry" connections, that is nails, bolts, pins and toothed nuts, have in general illustrated to us not so satisfactory a behaviour involving the ever-present possibility of dissipation of energy; in the sense that from the initial cycles in the field of large alternate displacements we note a considerable degradation of the structural behaviour with a notable reduction in dissipative capacities. The experimentation with new connections using steel as the ductile base material results in a behaviour altogether more satisfying. It is interesting to direct some of our investigations towards those connections based on simple hidden steel elements on the inside of the wood structure and bonded by means of a suitable epoxy-adhesive.

It is worth noting how the fact that the metallic element responsabile for the efficiency of the connection when fully inserted into the wood has notable results in respect to the global structural resistance to fire. While in fact it is well-known how exposed metallic elements constitute an obvious cause of immediate structural degradation in the event of fire, numerous related experiences have shown how protecting the steel with several centimeters thickness of wood can considerably increase

the fire resistance of the whole connection.

The first type of connection used to create composed wood structures with sufficiently ductile behaviour is based on a steel pin inserted orthogonally to the fibres, bonded to the wood and destined to give shear force strength in an orthogonal direction to the same pin axis (Fig. 1).

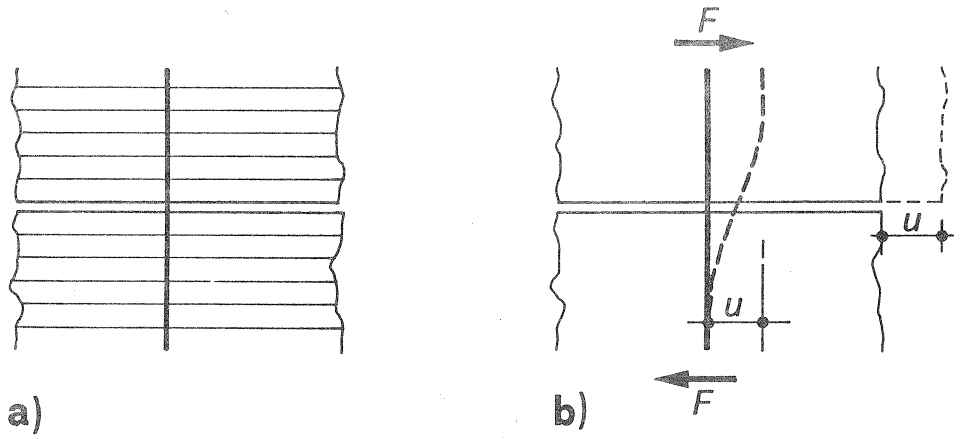


*Fig. 1*

The building system in general appears to be quite simple: a hole is effected in the wood of a diameter equal to the diameter of the steel bar increased by 3÷4 mm, the same bar is inserted and one proceeds to the sealing of the hole by means of a special epoxy-adhesive. Depending on the different means and building possibilities, the resin can be poured in the hole (partially or wholly) before the insertion of the pin or we can proceed to a simple injection after the pin is inserted. In this way the previous fixing of the pins on one of the two parts to be assembled is sometimes possible, initiating the second glueing after hardening of the first.

Considerable experience on connections of this type has been brought into effect by the authors during previous research which had as its aim, from the practical and design point of view, the static reinforcement of old wooden floor structures (Fig. 2). In this article it is only remembered how the possibility of bringing a composite wood-concrete structure to fruition is demonstrated. In such a structure, the existing wood beams collaborate with a new concrete slab of relatively modest thickness; in that way a composed structure is formed with quite spread connections made up of pins glued in holes made in the beam and inserted at the other end of the concrete.

During the numerous tests conducted to the point of collapse on physical models of composite wood-concrete structures, it has been possible to observe how different types of beams made from components with a definite brittle behaviour demonstrate a rather ductile behaviour showing large essentially plastic deformations before reaching collapse.

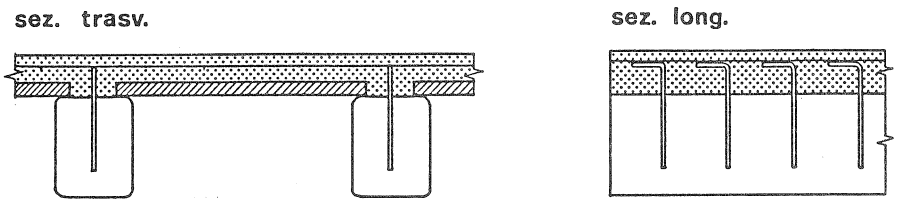


*Fig. 2*

For the special connection between wood and concrete which is responsabile for the whole structural ductility, certain laws of behaviour have been defined which have permitted a full static analysis of the structure with the object of correct planning.

We cannot refer such a law however to the connection between wood and wood, especially in consideration of the fact that the passage to glued-laminated wood requires a reconsideration of the values of the fundamental parameters.

As far as regards the characteristics of the wood-steel adhesive we refer to what has already been experimented on in the wood-concrete structure [1], applied in undoubtedly worse conditions given the presence of solid wood which is often in quite precarious condition of conservation.

The adoption of the same adhesive with laminated wood has proved to be quite easy to use with the result of simplifying the working method. It would also be an opportune moment to specify how the most recent experiments have been able to profit from epoxy-adhesive "on site" presenting reasonably high "critical and transitory temperatures" (140÷160°C) and how in this case the

---

[1] M.Piazza, G.Turrini - "*Una tecnica di recupero statico dei solai in legno*" - Recuperare n. 5 - 1983.
M.Piazza, G.Turrini - "*Il comportamento statico della struttura mista legno-calcestruzzo*" - Recuperare n. 6 - 1983.
M.Piazza, G.Turrini - "*Il recupero dei solai in legno. Esperienze e realizzazioni*" - Recuperare n. 7 - 1983.

protection of one external thickness of wood proves to be particularly efficient, with the aim of slowing down the rise in temperature both in the adhesive and in the steel. It must also be remembered that as far as the steel pin is concerned, it would be advisable, both for the good results achieved and the economy of the product, that common bars with improved adherence (in normal use in reinforced concrete stuctures) are utilized and that a good cleaning should be affected before glueing.

**3.** The behaviour of the elementary connections realized through the use of steel bars however resistant to shear force has been studied initially by means of laboratory tests on the typical schematic assembly indicated in Fig. 3 and seen in photograph 1.

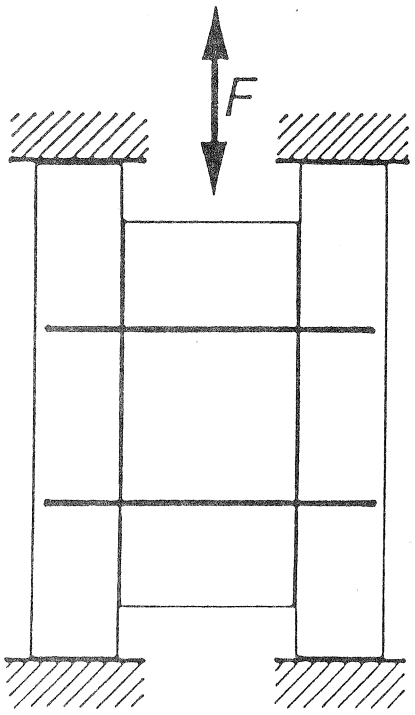


*Fig. 3*

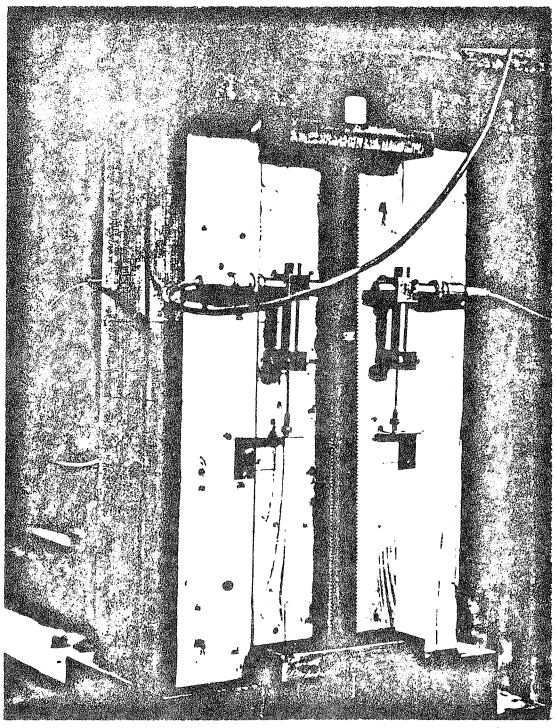

*Photo 1*

The tests are conducted by applying a mutual slipping force variable $F$ between the wooden components and continually recording, both graphically and numerically, diagrams $F$-$u$, where $u$ represents the relative slippage between the connected wooden parts (see also Fig. 1).

With the aim of isolating the influence of the various geometric and mechanical parameters of the coupling on the relative law of behaviour, a series of tests of the same type is effected: the values of the relevant parameters are varied in a range of values of practical importance.

In particular the experimentation foresees tests using monotonically increasing loading up to limits which can be considered of "practical collapse" for the connections and tests carried out in the field of large alternate displacements.

The tests involving monotonically increasing loading have the aim of singling out the aforesaid static behavioural laws of coupling; laws of "first loading" on which an analysis of normal service loads can be based. Particular regard must be given to the individualization of the stiffness and resistance of the connection and to the assumption of safety factors related to "limit states" of particular interest for design.

A modelling of the behaviour of the particular elementary connection using the glued pin previously described can already be represented through the following hyperbolic law:

$$(F - W_0 \cdot u) \cdot (F - F_{lim}) + c \cdot F^2 = 0. \qquad (1)$$

The aforesaid law, already in notable practical use, is enough to represent the effective behaviour of the elementary connection by means of a calibration on the experimental base. In this equation the parameter of the calibration can be: the tangent to the origin (initial stiffness $W_0$), coordinates of a characteristic point $P_1$ ($F_1$, $u_1$) of the curve, and the value $F_{lim}$ of the constant ordinate of the horizontal asymptote of the same curve (Fig. 4). $F_{lim}$ could represent the effective value of the mutual forces of collapse or a value conventionally assumed as such; the same law is complete with the assumption of the value $\bar{u}^*$ for the slippage at collapse, a characteristic and essential parameter in the individualization of the "limit state" and whose value could be conventionally fixed to a base of suitable safety criteria.

The law of behaviour outlined above may be simplified by substituting the curve represented by (1) with a bilateral shown by a dashed line in Fig. 4. The first segment O-A singles out an elastic behaviour characterized by stiffness $W_1$, while the second segment with slope $W_2$ simulates an aforesaid plastic behaviour

with strain-hardening. The parameter $F^*$ ordinate of the cusp of the bilateral evidently depends on the values of the geometrical

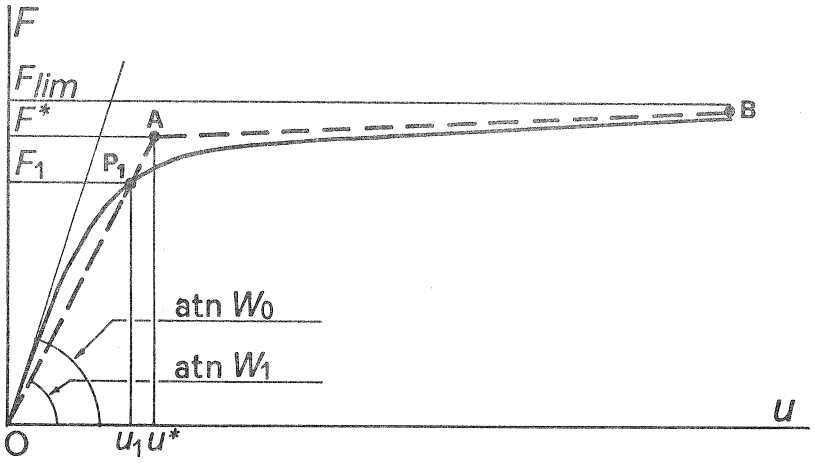


*Fig. 4*

and mechanical parameters of the elements of the connection and in particular on the ratio $l/d$ (between the length of the penetration of the pin in the wood and its diameter), on Young's modulus $E$ of the wood and on the diameter and the plastic moment of the steel bar.

On the basis of numerous experiences, it seems possible to assume the value for secant stiffness as being parameter $W_1$, on the experimental curve of behaviour relative to displacement $u_1$ = 1 mm; the values of the nearest displacements $u_1$ can in fact very often be made to coincide with the practical beginning of the field of large displacements in the elementary connection.

The elastic stiffness $W_1$, introduced like this, has proved to be dependent only on a few of the values of the parameters of the connections, in the practical field of variability. When the ratio $l/d$ is above 8÷9 (values which are in practice very often reached or surpassed), for laminated wood of average characteristics and $d$ variable between 8 and 14 mm (in the field of experimental values), the following equation can be used with sufficient accuracy:

$$W_1 = 0.1 \cdot E \cdot d \ , \qquad (2)$$

with $E$ being expressed by N/mm², $d$ in millimeters and $W_1$ in N/mm.

Similarly, it could be represented rather approximately as:

$$W_2 = 0.002 \cdot W_1 \ . \qquad (3)$$

**4.** The tests carried out according to the scheme already indicated in Fig. 3 in the field of large alternate displacements allow us to study the elementary connection particularly from the point of view of its habit to dissipate energy and therefore to offer a more or less ductile behaviour.

As an example of the initial experimental results it might be interesting to look at and compare the data recorded during two similar tests carried out on two samples A and B, which were differentiated on only one typology of connector maintaining however the geometrical and mechanical characteristics of the elements of connected wood, identical.

In sample A the connection was realized through the use of pieces of drawn steel bars, $d$ = 10 mm, inserted in precise holes in the wood, that is a traditional "dry" connection using pins. In sample B the same connection is realized through the use of steel bars with improved adherence, $d$ = 10 mm, inserted in holes Ø 13 mm and bonded to the wood by means of epoxy adhesive.

The two types of steel used in the two samples present identical mechanical characteristics, for both have equal values for yielding and ultimate stress of 450 and 570 MPa respectively with the value of the ultimate strain at around 21 % .

The direct comparison between diagrams $F$-$u$ recorded during the tests and reported in Figs. 5 and 6, for samples A and B respectively, seem particularly significant. In the aforesaid diagrams the values for $F$ are relative to the simple connction with a single pin on one side.

One can nevertheless already observe considerably different values assumed by the stiffness of the two connections in the field of service loads (a practically elastic field). One moves on in fact from a value of ~3.0 kN/mm for the connection with the "dry" pin to a value of ~10.25 for the connection with a bonded bar: in this second case it may be interesting to ascertain how, in applying the approximate equation (2), $W_1$ = 10.0 kN/mm may be obtained, value which is very close to the effective recorded value. Quite different values are observed for force $F$ at the limit of elasticity: 5.0 kN in case A and 11.0 kN in

case B.

The differences in behaviour of the two typologies are quite notable in cyclic events in the field of large alternate displacements, during which displacements of maximum values even equal to 10 times the limit elastic displacement are imposed.

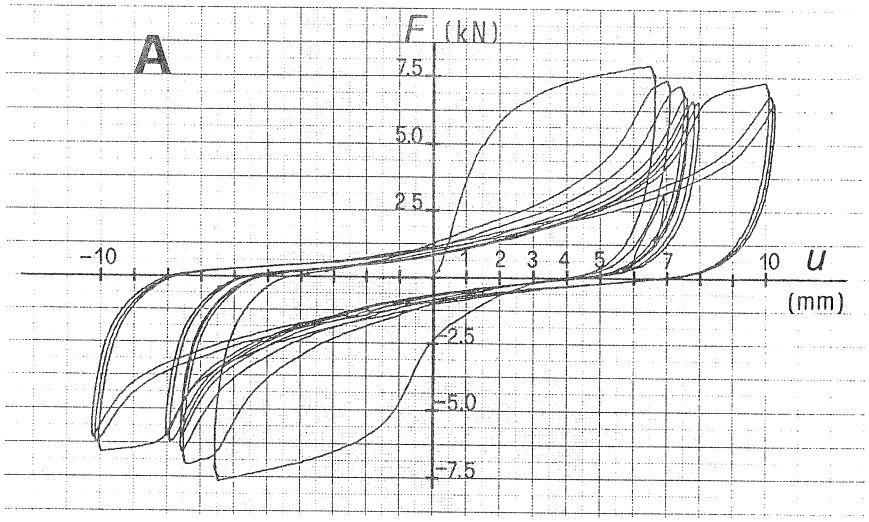


*Fig. 5*

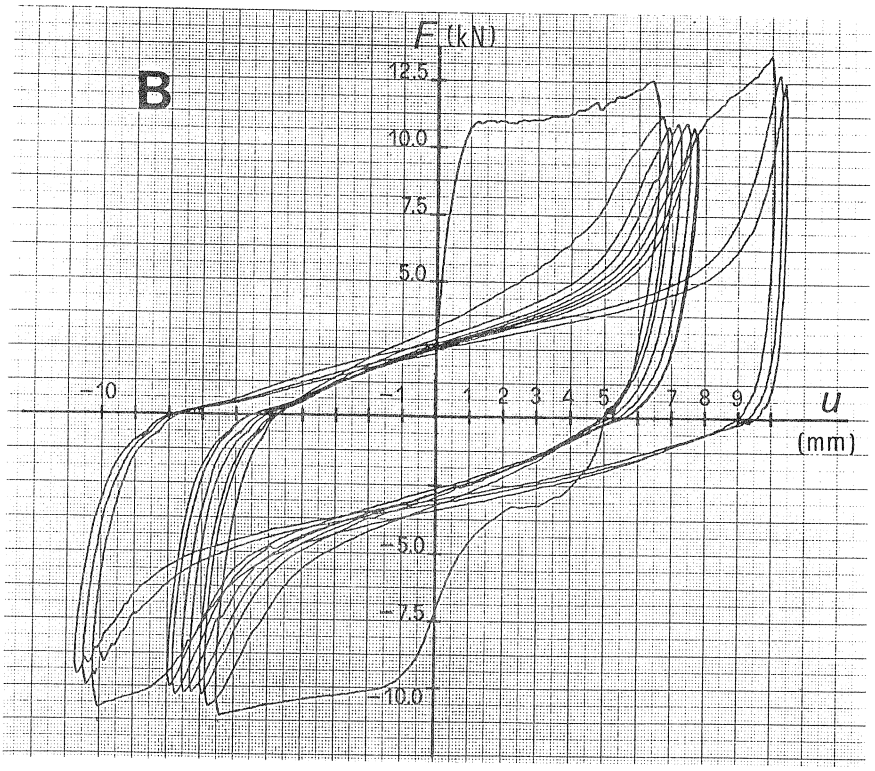


*Fig. 6*

The comparison between the diagrams reported in Figs. 5 and 6 demonstrates for case A a greater degradation in the dissipative cycles both in the transition from the 1.st and the 2.nd as well as for the following cycles with significant loss of stiffness and dissipative ability.

On this subject it would be interesting to compare both the values of dissipating energy in every cycle $L$ and that accumulated $LT$, as well as the assumed values of the ratio $\alpha$ between the energy $L$ dissipated in the cycle and the maximum comparative energy calculated as a product between the difference of extreme values of force $F$ and the difference between the extreme values

| CYCLE N. | $L$ (kNcm) A | B | $LT$ (kNcm) A | B | $\alpha$ A | B |
|---|---|---|---|---|---|---|
| 1 | 7.9 | 15.7 | 7.9 | 15.7 | 0.38 | 0.51 |
| 2 | 4.8 | 9.3 | 12.7 | 25.0 | 0.23 | 0.30 |
| 3 | 4.2 | 8.1 | 16.9 | 33.1 | 0.20 | 0.27 |
| 4 | 3.6 | 8.1 | 23.5 | 41.2 | 0.18 | 0.26 |
| 5 | 3.3 | 8.1 | 26.8 | 49.3 | 0.17 | 0.25 |
| 6 | 3.3 | 8.1 | 30.1 | 57.4 | 0.17 | 0.25 |
| 7 | 3.3 | 8.2 | 33.4 | 65.6 | 0.17 | 0.25 |

TAB. A

of displacement $u$ reached in the same cycle. It should be made clear what one intends here for a conventional meaning of "cycle", that is the whole path from a position of nil value for the displacement assigned $u$ to the successive analogous position.

The behaviour of the connections, in the field of large displacements, is characterized by permanent deformations in the wood of a depth of around $3d$ starting from the outside face of the wooden element, as well as by the appearance of a plastic hinge in the steel pin, which tends to localize towards the beginning of the plasticized area of the wood.

The numerous tests carried out on the models, in which the values of the parameters characteristic of the connections are varied, have always confirmed the notable difference between the "dry" connections using pins and the similar connection using bonded bars.

It should be noted how the stated differences can be essentially attributed to the superior interaction between wood and steel through a layer of adhesive . Furthermore in the connection with "dry" pins relative slippage between pin and wood occurs immediately beyond the elastic field in the inside of the hole in the axial direction of the same hole. The resulting phenomena, however impeded by the adhesive in the case of bonded bars, has a considerable negative influence on the behaviour of the connection, above all in respect to large alternate displacements, contributing to reduce stiffness and resistance of the same connection in the successive cycles and to increase total degradation.

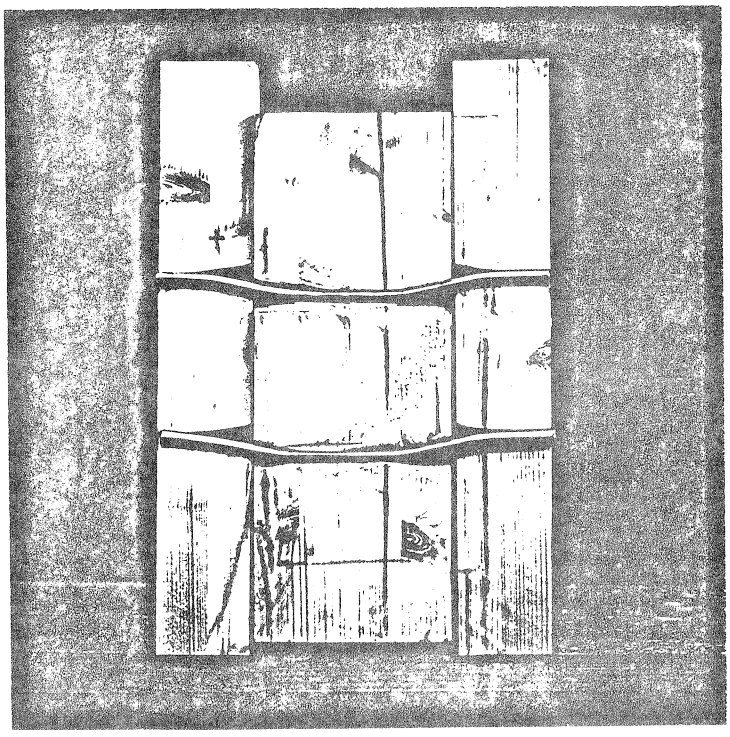

*Photo 2*

Photograph 2 shows a section of connection type A which appears after the occurance of the cycles represented in Fig. 5: the plasticized zones in the pins and wood are quite visible as well as the slippage of the pins in their holes.

As regards the elementary connection of bonded bars, quite

simplified models are under study; once calibrated through experimental parameters, we have an easy reference for the description of the behaviour of the same connection even in the fields of large displacements. The models discussed are based on the hypothesis of the elastic-plastic behaviour for the wood, assimilated in a continous medium in which is inserted a metallic element for which a scheme for a normal "flexural beam" is hypothesized which foresees concentrated plasticization in characteristic sections.

As far as regards the individualization of laws, capable of representing the elementary coupling with a glued pin (Fig. 6) for structural analysis of seismic type, it is advisible above all to remember how in such operations appreciable simplifications are in general possible. When in fact one is operating in fields where the structural behaviour is basically conditioned by energetic dissipation, one can pay less attention to the relative "laws of behaviour"; here we are maintaining extreme and integral values rather than point values of the same laws.

In this paper we limit our references to certain initial proposals on rather simplified laws, for which tests are being carried out on experimental calibration. With reference to the typical behaviour shown by the elementary connection (Fig. 6), the models illustrated in Figs. 7a and 7b can be introduced.

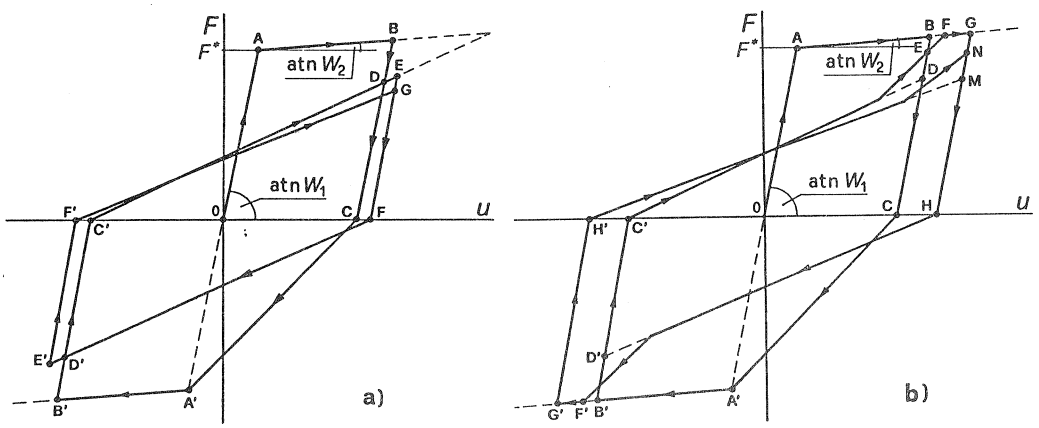


*Fig. 7*

In these diagrams where the law of first loading is represented by the bilateral O-A-B (or O-A'-B') already previously introduced and illustrated in Fig. 6 (dashed line). The first part of the bilateral illustrated is substituted by the C-A' segment only for

the first loading on the opposite side in respect to the initial one. The "unloading straight lines" can however always be assumed to have slope $W_1$. As regards the laws of reloading the proposal illustrated in Fig. 7a takes on the form of a straight line: this is defined, for every initial reloading path after the pseudo-plastic segment A-B or A'-B', as the straight line which unites point C' of nil force to point D situated in the straight line (B-C) of the previous unloading in such a position as to have $\overline{BD} = 0.25 \cdot \overline{BC}$ . For all the reloadings, which follow cycles in which the base curve A-B has not been reached, the relative indicative straight line is obtained by joining point F' of nil force with point G situated on the curve (E-F) of previous unloading in such a position to have $\overline{EG} = 0.10 \cdot \overline{EF}$ .

Fig. 7b illustrates the proposal of assuming to represent any particular branch of unloading, a bilateral constituted by the straight line C'-D obtained by joining point C' of nil force to point D situated on the line of previous unloading ($\overline{BD} = 0.25$ $\overline{BC}$) and from the line passing through point E ($\overline{BE} = 0.10 \cdot \overline{BC}$) with slope equals to the average value between $W_1$ and the slope of the previous line C'-D.

**5.** The elementary connection synthetically illustrated in the previous points lends itself to the realization of complete joints, both for members under axial force as well as under bending moment, conferring on the structure the possibility of dissipating energy concentrated in the same joint.

Figure 8 simply wants to demonstrate certain outlines for reference, some of which are better adapted to members under axial force and others to flexural elements.

The behavioural laws of the joint can be fixed beginning from the laws governing single connectors which in the forms previously mentioned are well adapted for use in numerical analysis, even complex ones, of high reliability regarding structural reality.

The behavioural law for members under axial force will be particularly obvious for connections of the type illustrated in Figs. 8a, 8b, 8c. In fact these will behave as represented in preceding figures 6 and 7.

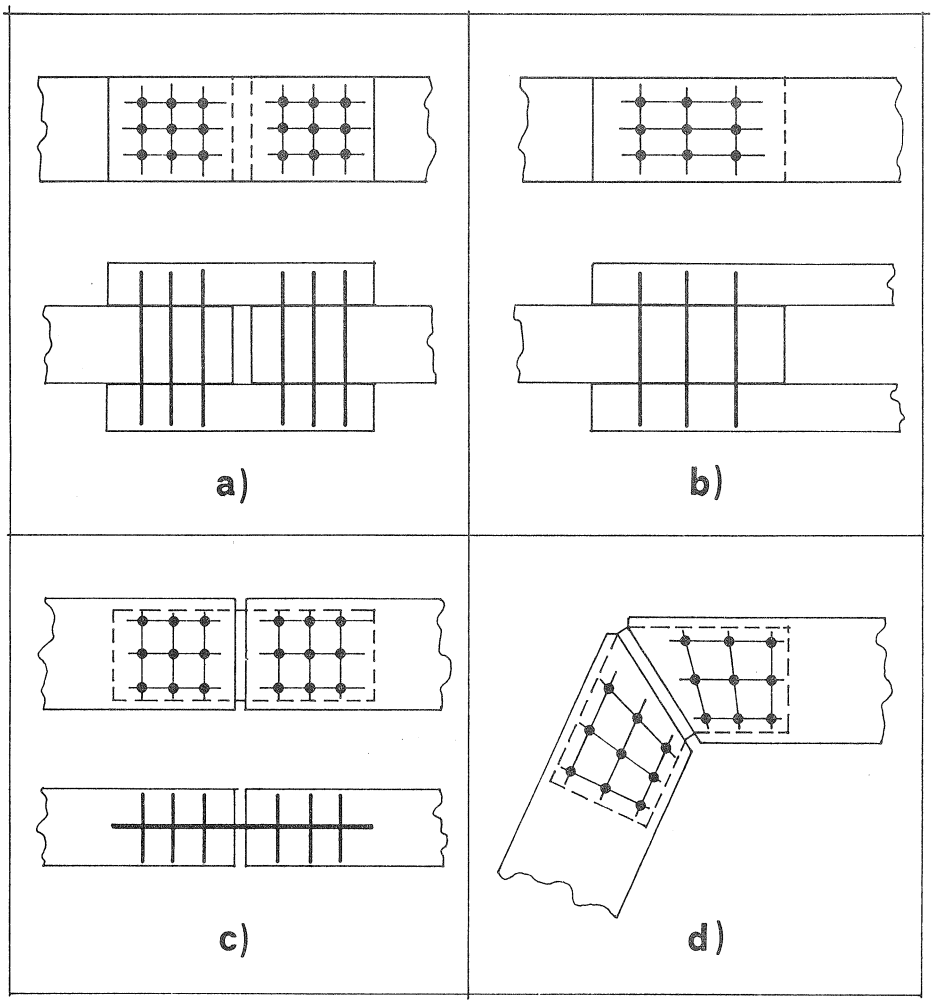


*Fig. 8*

In general if you intend to make full use of the dissipating qualities offered by the connections then the planning of seismic-resistant wood structures, will take account of the particular interferences which are found between the dissipative part and the brittle part of the structure (wooden beams and members). Here, for example, we are referring to the control of different values for stress in the wood during the exceptional seismic event, for which a knowledge of the maximum values of the force in the connections will be needed. Following this an extensive programme of dynamic analysis, using numerical models, on seismic-resistant structures realized according to the criteria previously outlined and in relation to accelerograms typical of earthquakes of exceptional intensity, is being carried out. The results deduced from such experiments serve as a good guide in our choice

of appropriate design criteria, above all if compared to the results of analogous
dynamic analyses carried out on non-dissipating wood structures.

We would like also to observe how the described glued-pin connection also lends itself to realize flexural structures made up of wooden beams which demonstrate a satisfactory "diffuse ductile" behaviour.

Here we are concerned with the realization (Fig. 9) of structures made up of a series of in-plane beams with parallel axes joined through the means of connectors already shown. A hypothesis is proposed for general stiffness of the connectors (according to laws already singled out) for relative displacements of the connecting points in a direction parallel to the axes. The same connectors are presumed to be indeformable as regards relative displacements orthogonal to the axes.

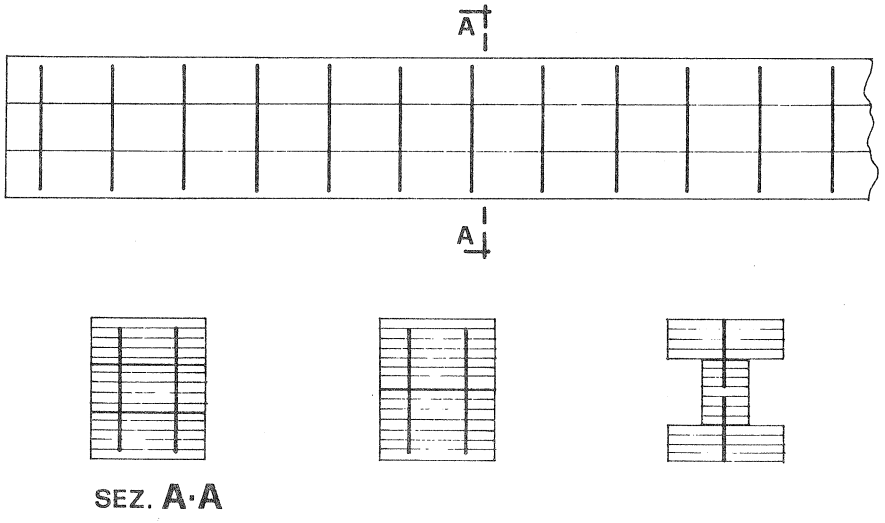


*Fig. 9*

For such a structure a rather general method of analysis has been put forward based on the introduction of a particular finite "multi-layer beam element" which takes account of the effective deformability of the connecting system even in relation to the non-linear behaviour of single components.

Without giving details of the numerical model already presented elsewhere [2] , it would be important to note certain

---

[2] M.Piazza, G.Turrini - "*Il comportamento statico della struttura mista legno-calcestruzzo*" - Recuperare n. 6 - 1983.
M.Piazza, G.Turrini - "*L'analisi del comportamento di travi composte a connessione deformabile*"- C.T.A. Montecatini 1985.

results concerning the analysis carried out on a "two-layer beam" structure of an extremely simple design, which nonetheless makes evident particular types of behaviour even in the field of large alternate displacements.

The example regarding the structure shown in Fig. 10 deals with a cantilever realized by two laminated wood beams with a constant rectangular section, with sides of 22 and 16 cm, connected all along their length with glued steel pins, $d$ = 10 mm, whose behaviour has already previously been singled out. The distribution of the pins (shown in Fig. 10) depends on a consideration of the different static efficiency of the connections placed corresponding to points which tends to develop different relative displacements. The resulting layer beam is clamped in section A and alternate displacements $f$ are imposed at top B in equilibrium to the horizontal force $F$ applied at the top.

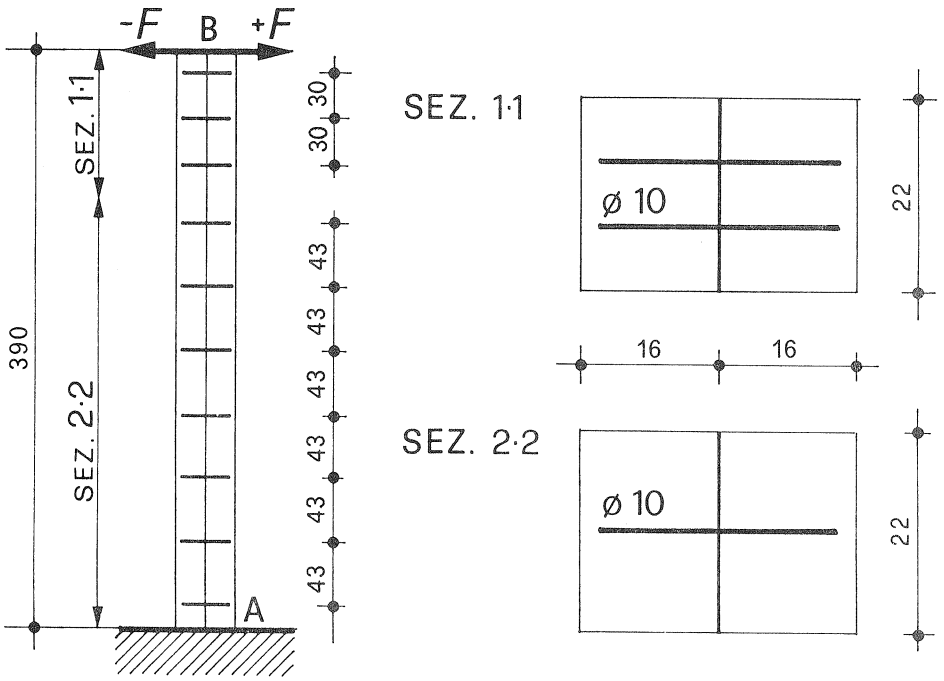


*Fig. 10*

A numerical test for "controlled displacement" has been carried out which deals with well known static proof giving some important details on the behaviour of the structure under seismic action.

The numerical analysis has been carried out subdividing the whole structure into 30 "two-layer beam" finite elements in which an elastic-brittle behaviour with $E$ = 10000 MPa has been

hypothesized for the wooden beams. For every elementary connection realized with a glued pin Ø 10 a simplified model of behaviour is presumed of the type illustrated in Fig. 7a, calibrated with experimental values deduced from the tests in Fig. 6.

With the object of establishing the entity of maximum displacement to be imposed at the top, a force $F$ monotonically increasing in B was initially considered, thus obtaining the diagram $F$-$f$ represented in Fig. 11 from branch O-A-B.

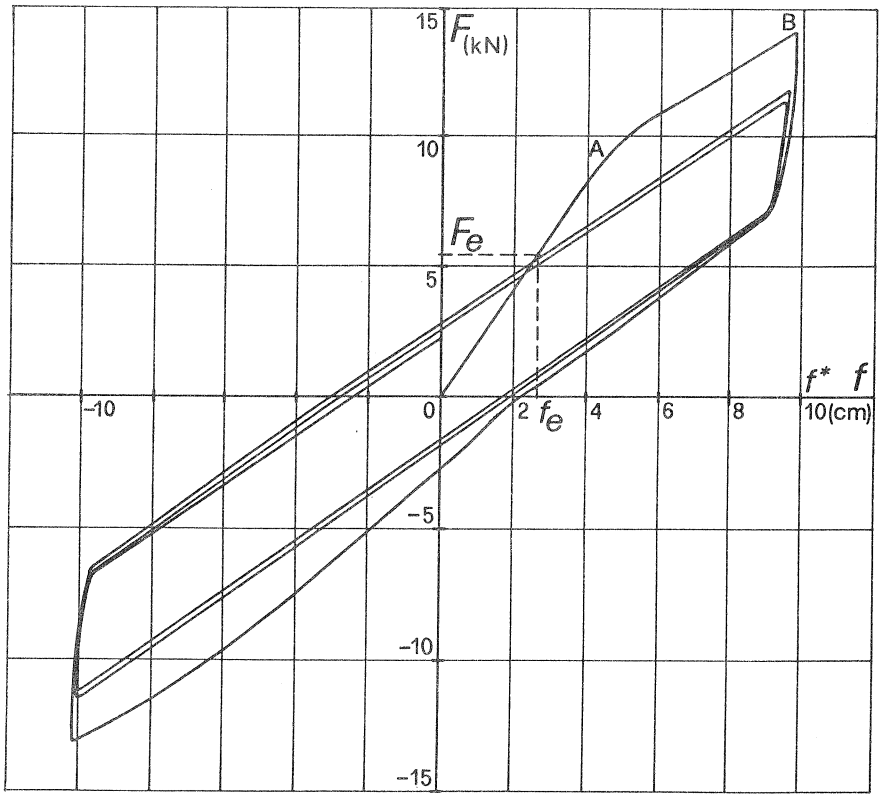


*Fig. 11*

From an examination of the numerical results obtained for the different levels of loading (and which for reasons of synthesis will not be examined in this article) it is possible to fix an upper limit for normal service loads of the value $F_e$ = 6 kN. Here we are concerned with a loading value which stays largely in the field of structural elastic behaviour and for which values of force parameters of major interest will be reported. At the fixed end of each of the wood beams an axial force equal to 76 kN and a bending moment of 5.6 kNm are witnessed, reaching an axial stress in the wood of a maximum value of 8.1 MPa.

The connections most under stress appear to be those of the upper part of the structure with a maximum value at mutual force of 7 kN, in this way being assured a value equivalent to around 1.5 for the safety coefficient compared to the limit stress at the beginning of large displacements in the connection.

The displacement *f* of the top of the cantilever at upper service limit is equal to 2.8 cm. In respect to the totally-glued beam with a section equal to the sum of those two sections considered, the layered beam shows a reduction in stiffness at the top of no less than 20 % and a lessened resistance relative to the values of maximum stress in the fixed section of just 10 %.

In the successive cycles of alternate displacement imposed at the top of the cantilever a maximum value of the parameter *f* is reached, on both sides, of around 10 cm, that is equal to more than 3.5 times the elastic service displacement. The relative structural behaviour appears to be quite fully outlined in diagrams *F-f* featured in Fig. 11.

It could be observed how force *F* at the top reaches a maximum value of around 14 kN in the initial cycle and around 12 kN in the successive one (maintaining therefore a value of between 2 and 2.3 times the maximum service force) and the dissipative cycles, apart from the obvious initial degradation, stay more or less constant in all the successive events of alternate displacements. In the wood beams, which obviously maintain an elastic behaviour, maximum tension on the outer face is observed, corresponding to the first displacement at the top of 10 cm, equal to 21 MPa: these are high values, but it must still be considered possible, given the exceptional nature of the imposed condition.

The case we are presenting, however elementary, may assume a key role for planners of wooden earthquake-resistant structures in demonstrating the possibilities offered by rather constant dissipative energies as a consequence of that flexural deformation of the members which present a particular diffuse ductility in the whole beam.

In the face of adequately planned seismic-resistant flexural structures, an assumption of the structural behaviour factor on as around 3, for an equivalent static approach, would certainly appear correct, thus bringing the wooden structure into a field characterized by sufficient dissipative capacity.

**6.** In the field of connections between the ends of wooden beams capable of guaranteeing a relative concentrated ductile behaviour and with reference to the usual steel based elements connected to the wood by epoxy-adhesive, particular typologies based on the insertion of metallic bars in a direction parallel to the layers of wood beams would appear to be of certain interest. Here we are talking about building techniques, for the moment experimental, which foresee the use of steel bars or plates, inserted in drilled or sawed holes and bonded as previously indicated. Wood structures present discontinuity in the joint connections where the resistance depends only on the metallic part, also responsible for the energetic dissipation in the post-elastic fields of its own strain.

The elementary static behaviour of shown connections is studied first by laboratory tests, subjecting the samples (carried out according to the scheme in Fig. 12) both to tensile test with monotonically increasing loading up to the collapse as well as to tests conducted in the field of large concentrated displacements of the joint on either side. Other tests concern however the pulling-out of steel elements inserted in the wood at various depths.

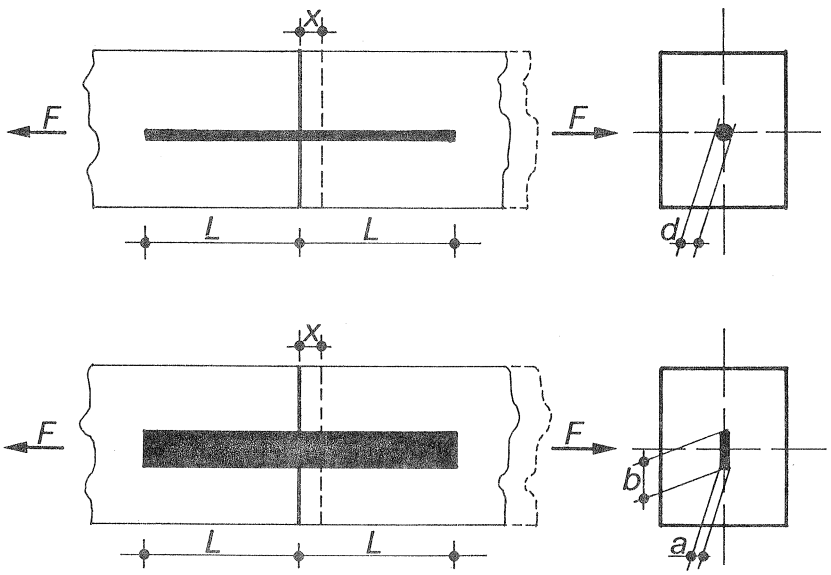


*Fig. 12*

The programme of tests in course foresees a notable variation of those parameters which influence the behaviour of the coupling both in the elastic as well as the post-elastic field: the depth

of penetration of the steel elements, the ratio between axial force in the steel bars and the perimeter of their sections, the ratio between the two areas of the wood and steel sections and other parameters representative of the mechanical properties of the materials involved. The experiments undertaken have the principal aim of isolating those elements used in formulating and calibrating behavioural laws of the connections not only in the elastic field, with the possibility of assuming reliable safety factors in respect to service limit states, but also in large repetitive displacements with consequent eventual energetic dissipation.

It seems early to draw conclusions, even if it is possible to briefly refer to certain types of typical behaviour already demonstrated in the laboratory and partly confirmed by analyses on numerical models.

The glueed surface of the metallic elements to the wood always shows in effect a final resistance (in respect to shear stress of pull out) more so than that of the wood. In the samples where the depth of penetration of steel bars has been kept within limited values there has always been pull out by way of breakages in the wood (see photograph 3).

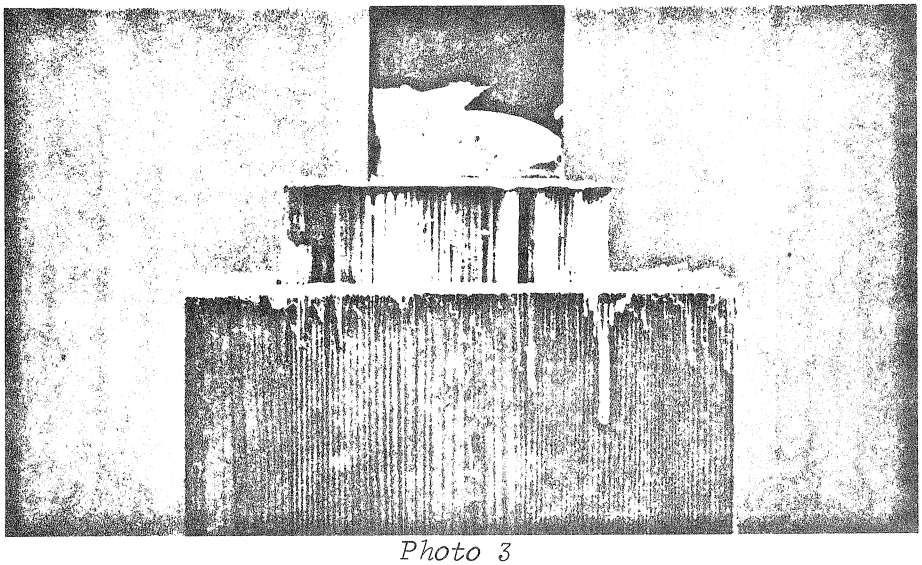

*Photo 3*

The depth of penetration in relation to the final tensile force in the bars may be established as the final value of the shear stress, conventionally related to the glued lateral surface of the bar of around 10 MPa. With a satisfactory depth of penetration guaranteed, providing there is no pull out of the

bar, we can obtain yielding in a free cross section of the bar. It has been possible to observe how sometimes increased values of tensile force in steel bars give rise to radial fractures in the wood, before the steel can yield, making problems for the establishment of ductile behaviour in the joint.

It seems possible that the establishment of safety criteria in respect to the onset of such fractures may be represented, for the moment, in the following limitation of adimensional parameter $\varphi$

$$\varphi = \frac{\sigma_s \cdot R}{E \cdot b} < 0.004, \qquad (4)$$

where $\sigma_s$ represents the yielding stress of steel, $R$ the hydraulic radius of the cross section of the bar, $E$ Young's modulus of wood and $b$ the minimum distance between the perimeter of the wood section and the perimeter of the steel section.

It seems that the use of bars of limited diameter, expecially if of high yielding stress, is more appropriate and the use of plate (of elongated rectangular cross section) preferable to that of round bars.

Certain numerical models are being experimented on in the study of the behaviour of wooden elements (to which thin steel plates have been attached). The introduction of finite elements in which steel "plate-plane stress" elements is coupled with "3-D wooden" elements by means of a "glue" element is of particular importance. Tests of the type shown in Photo 3 have also had the aim of defining the stiffness of the "glue" element. In the numerical model for the moment a brittle-elastic behaviour for wood and glue and a perfectly elastic-plastic behaviour for steel is hypothesized.

In general the ability to dissipate energy on the part of connecting joints realized by the aforesaid methods appears to be particularly improved; it is interesting to observe how the wood is not required to contribute to the mechanism of dissipating energy (if not that of maintaining its resistance in a behavioural field which is still elastic) and how it is possible in this way to exploit the optimum dissipative capacities of the steel unaffected by any interaction with the wood in the field of large displacements.

Fig. 13 illustrates schematically a laminated wood beam with rectangular section, of sides measuring 8.5 and 16.5 cm, subjected to bending tests in which the two central loadings (of resulting

force *F*) assume values, of alternate signs, in order to make the maximum vertical displacement *v* in the middle of the beam, reach much superior values than the maximum values in the elastic field. Corresponding to the section of the mid joint, the wooden beam presents a complete discontinuity and the connection made up of two bars Ø 10 (arranged as in figure) of FeB44k steel was realized in the same section.

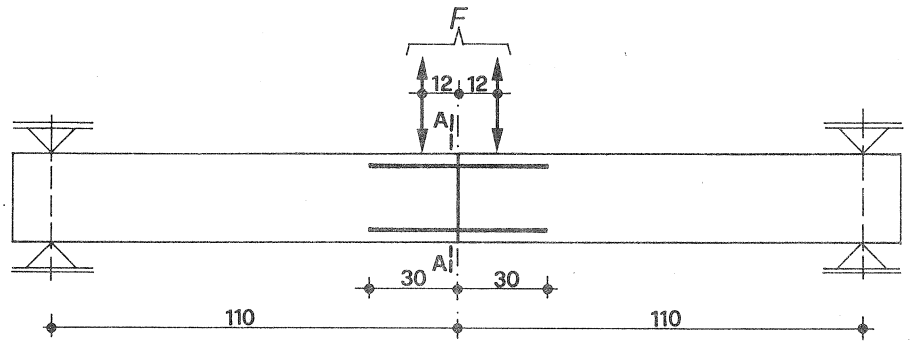


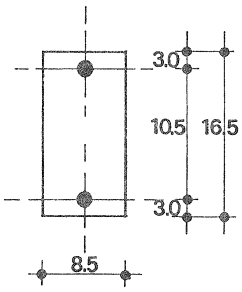


SEZ. A-A

*Fig. 13*

It should be noted how the connection is characterized by maximum values in the service bending moment equal to about 65÷70 % of the maximum possible value of the wood section. During the test, illustrated in photograph 4, parameters of vertical displacements were recorded in correspondence to different sections of the beam and also the relative displacements of the two sections of the wooden beams of the joint at the mid-point.

The results presented are limited to diagrams *F-v* (Fig. 14) recorded during four phases of alternate loadings and demonstrate the satisfactory dissipating behaviour offered by the joint.

It should be noted how maximum displacement at mid-point reaches a value of 2.0 cm, equal to 5 times maximum elastic displacement and how the yielding of the bars, both in traction and compression, caused strong concentrated mid-point rotation to occur.

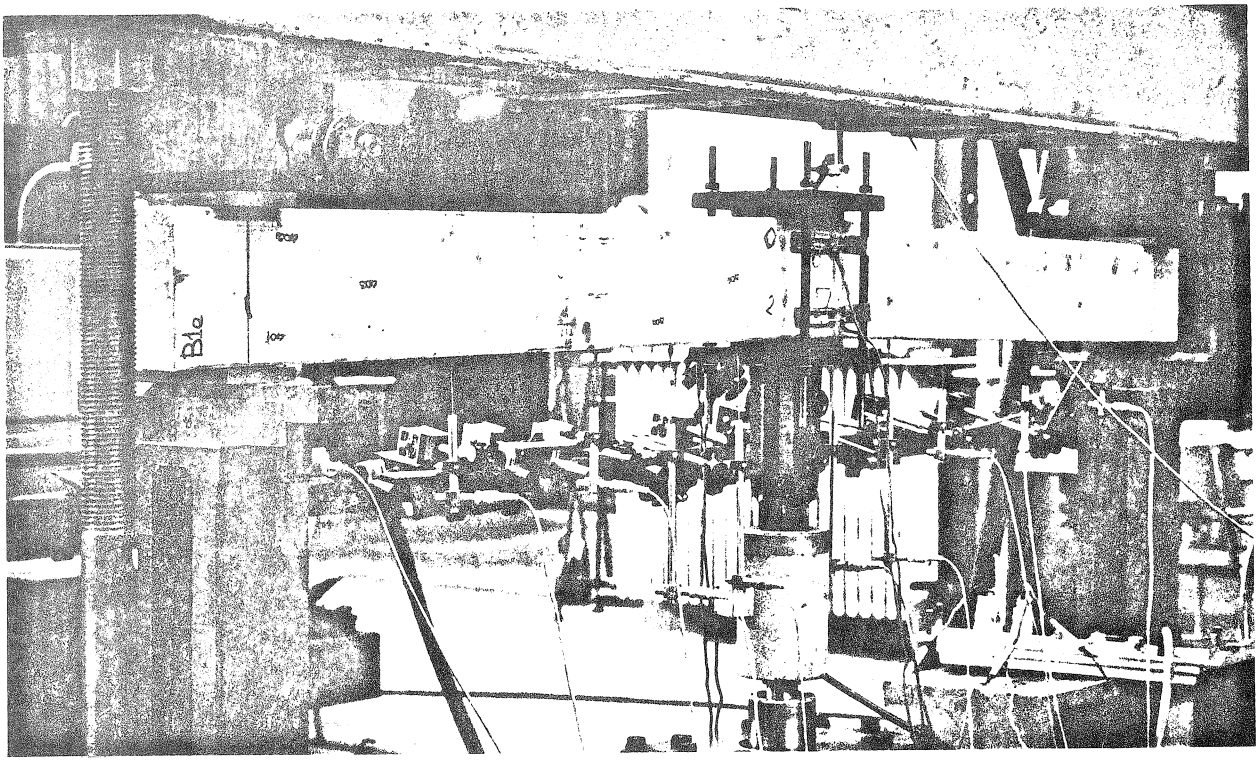

*Photo 4*

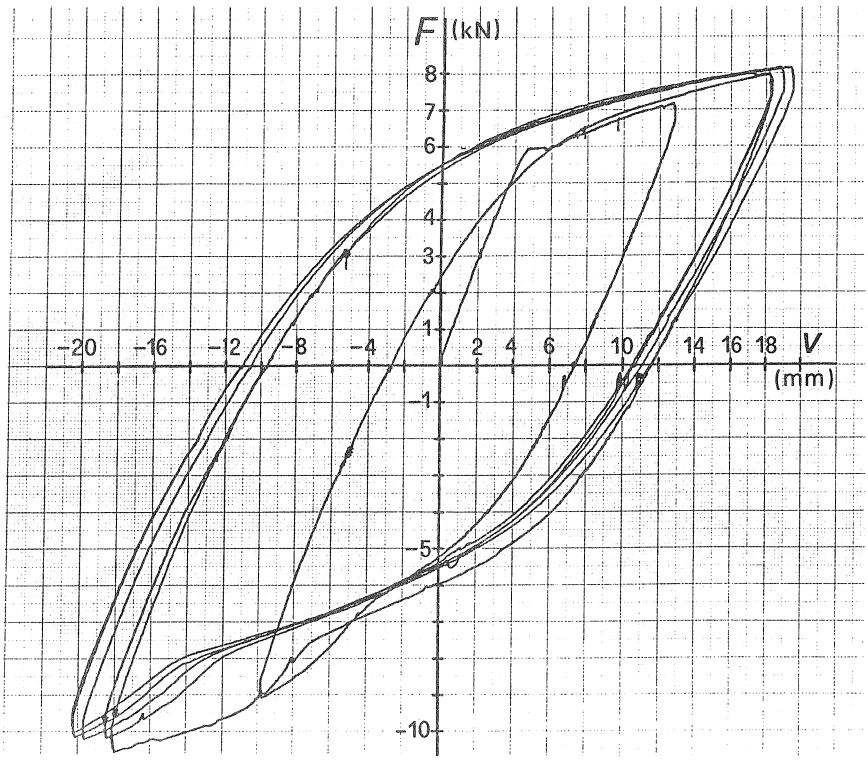


*Fig. 14*

Fig. 15 demonstrates the scheme for realization of a steel plate joint connection for a beam under laboratory testing, in similar conditions to those previouly illustrated. In this case

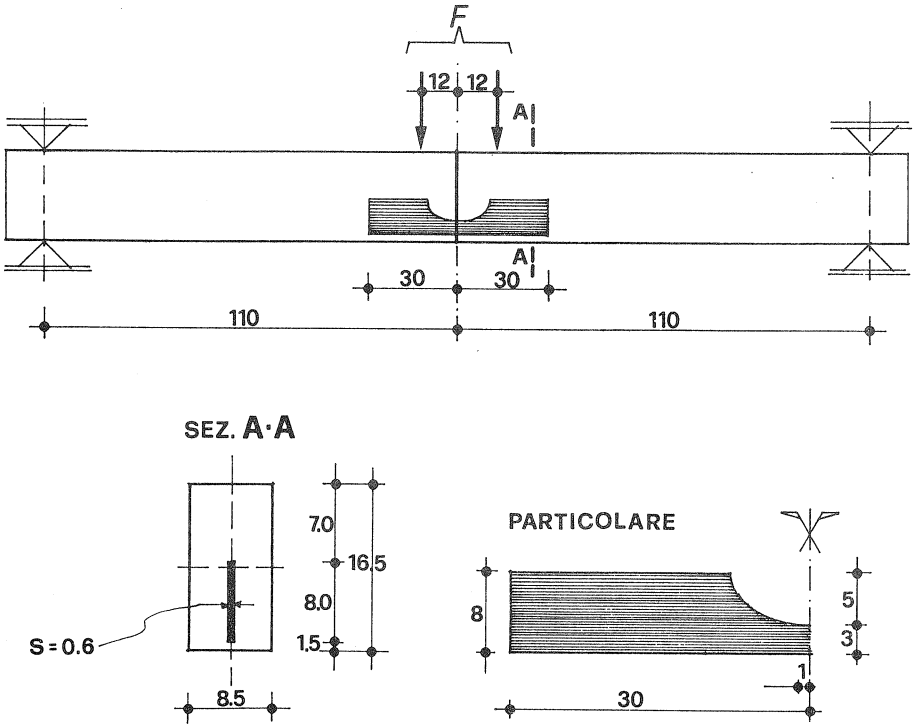


*Fig. 15*

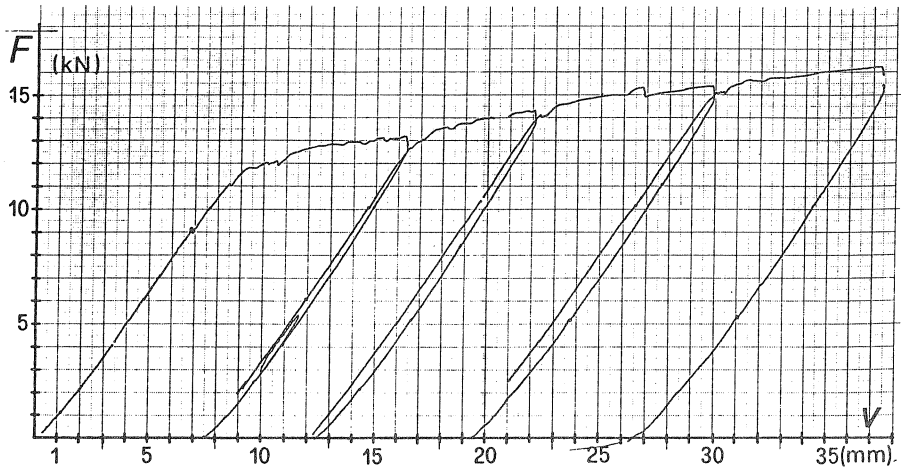


*Fig. 16*

the joint evidently has to allow maximum dissipation of energy for large displacements on only one side. Fig. 16 presents a diagram *F-v* recorded over four loading cycles: for each one of them an increase in maximum displacement *v* took place until

values of 3.5 cm were reached, equal to 5 times the maximum value in the elastic field. The bending moment at mid-point reached a maximum value equal to 2 times the limit service value for the wooden section during testing. It is interesting to observe the particularly rational from of the dissipative cycles, which are not in practice subjected to degradation even after

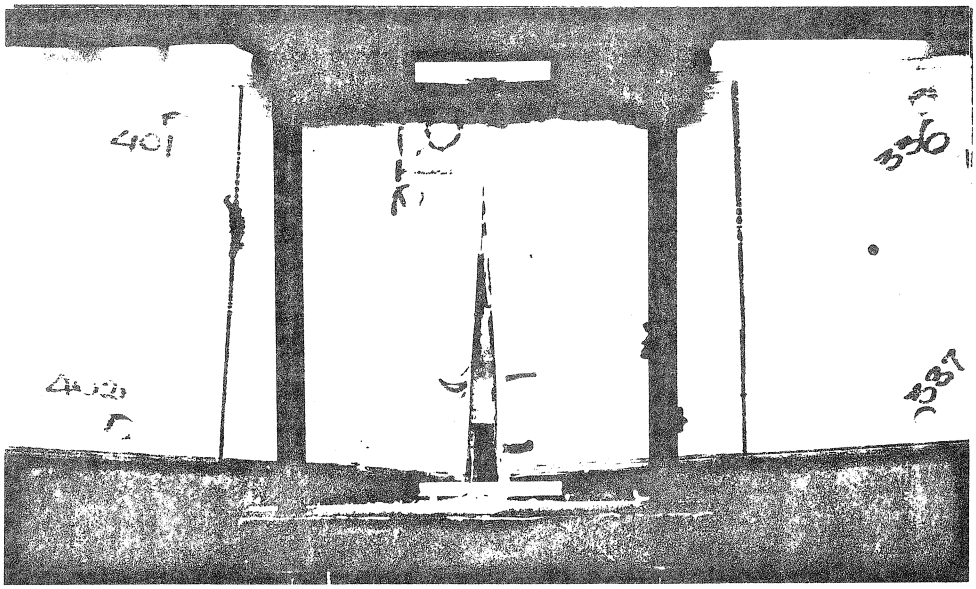

*Photo 5*

several loading events. Photograph 5 illustrates, without further comment, the effect of the yielding of the steel plate on the concentrated mid-point rotation.

**7.** The actual stage of research reached does not obviously allow us at this point to make any conclusive observations.

One must bear in mind how the direction taken will only allow us to adopt wooden earthquake-resistant structures with a certain dissipative possibility and how such properties may be concentrated not only in the joints but with adequate technical know-how also be spread out in various parts of the structure.

In depth study and research based on sound judgments of building particulars and the whole structure are obviously essential in order to achieve satisfactory planning, and can be outlined according to the following principal points.

- Experimentation in the field of large alternate displacements of "dry" joints of the classic type, that is realized through means of nails, pins, bolts, staples with the object of individualizing eventual dissipative ability and, in this case, the relative behavioural laws.

- Experimentation carried out on joints with glued metallic components, both elementary and complex, and individualization of the relative laws of behaviour even with the aim of dissipating energy.

- The carrying out of direct dynamic analyses on wood structures rendered dissipative through a joint or assembly device. Dynamic analyses must be related to different soil accelerograms initially regarding elementary structures, but particularly indicative with the aim of individualizing typical types of behaviour in the seismic field.

- The introduction of a general numerical modelling valid both for analysis in the service and seismic field of in-plane or spatial systems of of beams, made of wooden elements with dissipative joints.

- Proposals on possible values to be assigned to the "behavioural factor" in an equivalent static approach in relation to the different levels of ductility offered by the different planned wooden structures.

---

*Acknowledgements.*

We must thank : Holzbau S.p.A., of Bressanone and Mr. Paolo Sieni (Engineer) for their generous help and advice in the field of laminated wood structures; F.I.P. S.p.A. of Padua for their contribution on specific research concerning epoxy-adhesives.

The aforesaid firms, long involved and sympathetic to the problems in the field of research, also made materials available for the building of various models for use in experimental laboratory tests.

CIB-W18/19-8-1

INTERNATIONAL COUNCIL FOR BUILDING RESEARCH STUDIES AND DOCUMENTATION

WORKING COMMISSION W18 - TIMBER STRUCTURES

# PREDICTING THE NATURAL FREQUENCIES OF LIGHT-WEIGHT WOODEN FLOORS

by

I Smith
University of New Brunswick
Canada
Y H Chui
Timber Research and Development Association
United Kingdom

MEETING NINETEEN
FLORENCE
ITALY
SEPTEMBER 1986

# PREDICTING THE NATURAL FREQUENCIES OF LIGHT-WEIGHT WOODEN FLOORS

by

Ian Smith
University of New Brunswick

Y. H. Chui
Timber Research and Development Association
United Kingdom

Abstract

This paper gives 'designer useable' methods for predicting the dynamical behaviour of light-weight wooden joisted floors covered with semi-rigidly attached wood based sheathings of materials such as chipboard or plywood. It is demonstrated that good approximations to the fundamental natural frequencies of floors with practical combinations of edge conditions can be obtained by assuming that a floor behaves as a simple composite beam. Guidance is given concerning the calculation of natural frequencies of floors simply supported at all four edges for higher order modes of vibration.

Paper prepared for IUFRO Wood Engineering Group Meeting - Florence, Italy, September 1986

May 1986

## 1. Introduction

The following is part of the results of a study to identify reliable and 'designer useable' methods for predicting the dynamical behaviour of light-weight wooden joisted floors covered with semi-rigidly attached wood based sheathings of materials such as chipboard or plywood. Because of the number of variables involved in floor construction, it was decided that a calculation method was preferable to production of design charts. To achieve designer useability calculations needed to be sensibly executable on an electronic calculator of the scientific variety.

A review of the literature, (1), revealed that there exist well tried explicit calculations for predicting the natural frequencies of rectangular isotropic plates. In an extension of the isotropic plate theory Ohlsson, (7), gives an explicit solution for a rectangular orthotropic plate simply supported at all four edges. What the writers required was to provide a prediction of the natural frequencies of rectangular orthotropic plates with stiffening ribs (joists) semi-rigidly connected (nailed or glued with elastomeric adhesive) to the plates for selected combinations of simply supported and free edge conditions.

This paper gives explicit calculation methods for predicting natrual frequencies of wooden joisted floors with semi rigidly attached sheathings. It also discusses the sensitivity of selected solutions to variations in floor span, floor width and the ratio of the across joist stiffness in bending to that along the joists.

## 2. Explicit prediction of natural frequencies of wooden joisted floors

Below it is shown how to apply the well known Rayleigh method, to predict the natural frequencies of lightweight wooden joisted floors with wood based sheathings semi-rigidly attached to the upper surfaces of the joists. Consideration is limited to floors which are rectangular on plan and to selected combinations of simply supported (SS) edges and free (F) edges. Figure 2.1 defines the coordinate system and geometric notation used:

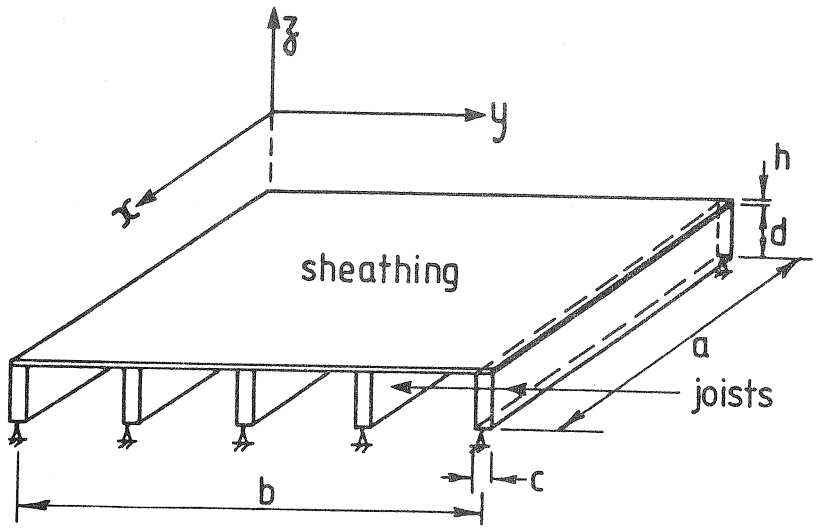


Figure 2.1 Coordinate system and geometric notation

Two combinations of edge conditions on floors are considered:

1. SS-F-SS-F, which denotes simply supported at edges parallel to the y-axis and free at edges parallel to the x-axis, and

2. SS-SS-SS-SS, which denotes simply supported at all edges.

The following assumptions are made:

(i) the sheathing is thin, uniform and orthotropic with axes of material symmetry parallel to x, y and z-axes,

(ii) each joist has uniform stiffness throughout its length,

(iii) all stresses are generated by bending deformation of the floor and only displacement w in z-axis direction is considered,

(iv) no separation between sheathing and joists under loading,

(v) floor responds linear elastically and small deflexion theory is valid,

(vi) no discontinuities in the sheathing and shear-lag effects in the plane of the sheathing may be neglected.

From the theory of orthotropic plate bending, total strain energy stored in the sheathing can be obtained from the expression, (4):

$$U_s = \int_0^a \int_0^b \left[\frac{K_x}{2}\left(\frac{\partial^2 w}{\partial x^2}\right)^2 + \frac{K_y}{2}\left(\frac{\partial^2 w}{\partial y^2}\right)^2 + K_\nu \left(\frac{\partial^2 w}{\partial x^2}\right)\left(\frac{\partial^2 w}{\partial y^2}\right) + 2K_G \left(\frac{\partial^2 w}{\partial x\, \partial y}\right)^2\right] dydx \quad \ldots\ (2.1)$$

where: $K_x = \dfrac{E_x h^3}{12(1-\nu_{xy}\nu_{yx})}$

$K_y = K_x \left(\dfrac{E_y}{E_x}\right)$

$K_\nu = \nu_{xy} K_x$

$K_G = G_{xy} \dfrac{h^3}{12}$

$E_x$ and $E_y$ = moduli of elasticity in x and y directions,

$\nu_{xy} = \dfrac{\varepsilon_y}{\varepsilon_x}$ = strain in y direction due to stress in x direction,

$G_{xy}$ = modulus of rigidity in plane of sheathing

If the number of joists is n then the total strain energy stored in the joists is;

$$U_J = \frac{1}{2} \sum_{i=1}^{n} (EI)_i \int_o^a \left(\frac{\partial^2 w}{\partial x^2}\right)^2 dx \qquad \ldots\ (2.2)$$

where: $(EI)_i$ = flexural rigidity associated with $i^{th}$ joist

$$\neq \left(\frac{Ecd^3}{12}\right)_i$$

Appendix I gives guidance on the calculation of $(EI)_i$ which is a function of the sheathing and joist properties, the stiffness of the sheathing to joist connection and the number of half wave lengths in the direction of the joists for the natural frequency being calculated.

The total kinetic energy of the sheathing is;

$$T_s = \frac{1}{2} \rho_s h \int_o^a \int_o^b \left(\frac{\partial w}{\partial t}\right)^2 dy\, dx \qquad \ldots\ (2.3)$$

where: $\rho_s$ = density of the sheathing

$\frac{\partial w}{\partial t}$ = vertical velocity at point x, y at time t

For n joists the total kinetic energy is;

$$T_J = \frac{1}{2} \sum_{i=1}^{n} (\rho_J cd)_i \left(\frac{\partial w_i}{\partial t}\right)^2 dx \qquad \ldots\ (2.4)$$

where $\rho_J$ = density of joist

$\frac{\partial w_i}{\partial t}$ = vertical velocity of $i^{th}$ joist at x at time t

## 2.1 Fundamental natural frequency of SS-F-SS-F floor

For the free vibration of a SS-F-SS-F floor, let us assume that the displacement w at time t can be represented by the function:

$$w(x,y,t) = A_1 \left[\sin\left(\frac{\pi x}{a}\right) + \emptyset \sin\left(\frac{\pi x}{a}\right) \sin\left(\frac{\pi y}{b}\right)\right] \sin(\omega_1 t + \alpha) \qquad \ldots\ (2.5)$$

where: $\omega_1$ = angular frequency in radians

$\alpha$ = phase angle in radians

$A_1$ = displacement amplitude for the first term in the function

$\phi = \frac{A_2}{A_1}$ = ratio of displacement amplitude for second term in function to $A_1$

The first term in the function is equivalent to that associated with a simply supported beam while the second term is equivalent to that for a rectangular plate simply supported along all edges. Experimental work by Chui (2) has shown equation (2.5) to be appropriate for SS-F-SS-F wooden floors if the condition is imposed $\phi \geq 0.0$).

If joists are equally spaced the displacement function for the beams is:

$$\omega_i(x,t) = A_1 \left[\sin\left(\frac{\pi x}{a}\right) + \phi \sin\left(\frac{\pi x}{a}\right) \sin\left(\frac{\pi(i-1)}{n-1}\right)\right] \sin(\omega_1 t + \alpha) \quad \ldots. (2.6)$$

Note that the first and $n^{th}$ joists occur at $y = 0$ and $y = b$ respectively.

Substituting from equation (2.5) in equations (2.1) and (2.3) and from equation (2.6) in equations (2.2) and (2.4), integrating and rearranging yields:

$$T = T_S + T_J = \frac{a A_1^2 \omega_1^2 \cos^2(\omega_1 t + \alpha)}{4} [C_1 + \phi C_2 + \phi^2 C_3] \quad \ldots. (2.7)$$

$$U = U_S + U_J = \frac{\pi^4 A_1^2 \sin^2(\omega_1 t + \alpha)}{4} [C_4 + \phi C_5 + \phi^2 C_6] \quad \ldots. (2.8)$$

where: $C_1 = \rho_s bh + \sum_{i=1}^{n} (\rho_J cd)_i$

$$C_2 = 2 \sum_{i=1}^{n} (\rho_J cd)_i \sin\left(\frac{\pi(i-1)}{n-1}\right)$$

$$C_3 = \frac{\rho_S bh}{2} + \sum_{i=1}^{n} (\rho_J cd)_i \sin^2 \left(\frac{\pi(i-1)}{n-1}\right)$$

$$C_4 = \frac{1}{a^3} \left(b K_x + \sum_{i=1}^{n} (EI)_i\right)$$

$$C_5 = \frac{2}{a^3} \left(\sum_{i=1}^{n} (EI)_i \sin \left(\frac{\pi(i-1)}{n-1}\right)\right)$$

$$C_6 = \frac{bK_x}{2a^3} + \frac{aK_y}{2b^3} + \frac{K_\nu}{ab} + \frac{2K_G}{ab} + \frac{1}{a^3} \left(\sum_{i=1}^{n} (EI)_i \sin^2 \left(\frac{\pi(i-1)}{n-1}\right)\right)$$

For a free-vibrating system and assuming no frictional loss, the sum of the strain energy and kinetic energy is a constant. The kinetic energy in the mean position, where $\cos(\omega t + \alpha) = \pm 1$, equals the strain energy in the position of maximum displacement, where $\sin(\omega t + \alpha) = \pm 1$. Thus from equations (2.7) and (2.8):

$$\omega_1^2 = \frac{\pi^4}{a} \frac{[C_4 + \emptyset\, C_5 + \emptyset^2 C_6]}{[C_1 + \emptyset\, C_2 + \emptyset^2 C_3]} \quad \text{rads}^2/\text{sec}^2 \qquad \ldots\ (2.9)$$

Transforming from angular frequency ($\omega_1$) to cyclic frequency ($f_1 = \omega_1/2\pi$) yields:

$$f_1 = \frac{\pi}{2} \sqrt{\frac{C_4 + \emptyset C_5 + \emptyset^2 C_6}{a(C_1 + \emptyset C_2 + \emptyset^2 C_3)}} \quad \text{Hz.} \qquad \ldots\ (2.10)$$

The value for $\emptyset$ needed to solve equations (2.9) or (2.10) is the positive root of:

$$\frac{d(\omega_1^2)}{d\emptyset} = C_1 C_5 - C_2 C_4 + 2 (C_1 C_6 - C_3 C_4) \emptyset + (C_2 C_6 - C_3 C_5) \emptyset^2 = 0 \qquad \ldots\ (2.11)$$

which minimizes $\omega_1^2$ and hence $f_1$.

## 2.2 Fundamental natural frequency of a floor which behaves as a simply supported beam

The fundamental natural frequency of a simply supported beam can be found by assuming a displacement function equal to the first term of equation (2.5), i.e.

$$w(x,t) = A \sin \left(\frac{\pi x}{a}\right) \sin (\omega_1 t + \alpha) \qquad \ldots\ (2.12)$$

In the context of wooden floors this would be approached where a SS-F-SS-F floor has a sheathing with a very high rigidity in bending across the joists resulting in $\emptyset$ effectively equal to 0.0. This might be approached in floors for which span to width ratio (a/b) is relatively large. Although the procedure of section 2.1 could be followed, the solution for $\omega_1$ is easily found by placing $\emptyset = 0.0$ in equation (2.9), which yields:

$$\omega_1^2 = \frac{\pi^4 C_4}{a C_1} = \frac{\pi^4}{a^4} \times \frac{[bK_x + \sum_{i=1}^{n} (EI)_i]}{[\rho_s bh + \sum_{i=1}^{n} (\rho_J cd)_i]} \qquad \ldots\ (2.13)$$

Hence:

$$f_1 = \frac{\pi}{2}\sqrt{\frac{C_4}{aC_1}} = \frac{\pi}{2a^2}\sqrt{\frac{bK_x + \sum_{i=1}^{n} (EI)_i}{\rho_S bh + \sum_{i=1}^{n} (\rho_S cd)_i}} \quad \text{Hz.} \qquad \ldots\ (2.14)$$

## 2.3 Fundamental natural frequency of a SS-SS-SS-SS floor

The fundamental natural frequency of a floor simply supported along all four edges can be found by assuming a displacement function equal to the second term of equation (2.5), i.e.

$$w(x,y,t) = A \sin \left(\frac{\pi x}{a}\right) \sin \left(\frac{\pi y}{b}\right) \sin (\omega_1 t + \alpha) \qquad \ldots\ (2.15)$$

In the context of practical wooden floors this would correspond to a situation where the outer joists were attached to the walls of a building and each internal joist is simply supported at both ends. Although, as

before, the procedure of section 2.1 could be followed, the solution for $\omega_1$ is easily found by placing $\emptyset = \infty$ in equation (2.9), which yields:

$$\omega_1^2 = \frac{\pi^4 C_6}{a C_3} = \frac{\pi^4}{a} \left[\frac{bK_x}{2a^3} + \frac{aK_y}{2b^3} + \frac{K_\nu}{ab} + \frac{2K_G}{ab} + \frac{1}{a^3} \left( \sum_{i=1}^{n} (EI)_i \sin^2 \left(\frac{\pi (i-1)}{n-1}\right)\right] \Big/ \left[\frac{\rho_s bh}{2} + \sum_{i=1}^{n} (\rho_J cd)_i \sin^2 \left(\frac{\pi (i-1)}{n-1}\right)\right] \quad \ldots\ (2.16)$$

Hence: $$f_1 = \frac{\pi}{2} \sqrt{\frac{C_6}{a C_3}} \quad \text{Hz} \quad \ldots\ (2.17)$$

## 2.4 Natural frequencies of a SS-SS-SS-SS floor for higher order modes of vibration

For modes of vibration other than the fundamental mode, it is necessary to adopt a displacement function which divides the floor into N panels in the x axis direction and M panels in the y axis direction such that the floor has a total of NM panels. (Note the product of N and M does not in general define the order of the modal frequency being predicted). Let it be assumed that displacement w at time t can be represented by the function:

$$w(x, y, t) = A \sin \left(\frac{N \pi x}{a}\right) \sin \left(\frac{M \pi y}{b}\right) \sin (\omega_{N,M} t + \alpha) \quad \ldots\ (2.18)$$

Following the procedure of section 2.1, this yields:

$$\omega_{N,M}^2 = \frac{\pi^4 \left[ab(C_7 + C_8) + \frac{N^4}{a^3} \left( \sum_{i=1}^{n} (EI)_i \sin^2 \left(\frac{M\pi (i-1)}{n-1}\right)\right)\right]}{\frac{\rho_s h ab}{2} + a \sum_{i=1}^{n} (\rho_J cd)_i \sin^2 \left(\frac{M\pi (i-1)}{n-1}\right)} \quad \ldots\ (2.19)$$

where: $$C_7 = \frac{K_x N^4}{2 a^4} + \frac{K_y M^4}{2 b^4} + \frac{K_\nu N^2 M^2}{a^2 b^2} ,$$

$$C_8 = \frac{2 K_G N^2 M^2}{a^2 b^2}$$

For the special case of N = M = 1 equation (2.19) reduces to equation (2.16).

From equation (2.19)

$$f_{N,M} = \frac{\pi}{2} \sqrt{\frac{ab(C_7 + C_8) + \frac{N^4}{a^3} \left( \sum_{i=1}^{n} (EI)_i \sin^2 \left( \frac{M \pi (i-1)}{n-1} \right) \right)}{\frac{\rho_s h ab}{2} + a \sum_{i=1}^{n} (\rho_J cd)_i \sin^2 \left( \frac{M \pi (i-1)}{n-1} \right)}} \quad .... (2.20)$$

The above is in essence an alternative to the Rayleigh-Ritz method, (9). An advantage of the method of this section is that explicit hand calculations can be used rather than solving the eigenvalue equation $[K-M\omega^2]g = 0$ associated with the Rayleigh-Ritz method. A disadvantage is that it is necessary to calculate $f_{N,M}$ for all feasible combinations of N and M in order to be certain of identifying the desired number of lowest natural frequencies for a given floor. Experimental observations by Ohlsson, (6), and Chui, (2), indicate that for typical domestic floors with $a \leq b$, the five lowest natural frequencies are likely to be: $f_1 = f_{1,1}$, $f_2 = f_{1,2}$, $f_3 = f_{1,3}$, $f_4 = f_{1,4}$ and $f_5 = f_{1,5}$. This kind of information can be used to great advantage in design situations. For example, by comparing $f_{1,5}$ with $f_{2,1}$ it may be possible when estimating the five lowest natural frequencies of a floor to need only six calculations, instead of the ten feasible combinations of N and M which would normally be checked.

## 3. Sensitivity of predictions of fundamental natural frequencies of joist and sheathing floors

Figure 3.1 compares solutions for the fundamental natural frequencies of SS-F-SS-F floors (equation 2.10) with those for SS-SS beam floors (equation 2.14) and those for SS-SS-SS-SS floors (equation 2.17). This comparison covers a range of combinations of a and b. The relative stiffness index, RSI, is adopted as a measure of the across joist bending stiffness to that along the joists. In the analyses used to produce Figure 3.1 all independent variables other than a, b and $E_y$ were kept constant at the following values:

$c = 0.047$ m, $d = 0.197$ m, $h = 0.022$ m, $s = 0.20$ m,

$E_x = 3.20 \times 10^9$ N/m$^2$, $E_J = 9.0 \times 10^9$ N/m$^2$, $k = 1.0 \times 10^6$ N/m,

$\rho_s = 640$ kg/m$^3$, $\rho_J = 500$ kg/m$^3$,

spacing of joists = 0.60 m.

Thus variations in RSI were produced entirely through modification of $E_y$ the modulus of elasticity in bending for the sheathing in the across joist direction. The feasible range for RSI indicated in Figure 3.1 is believed to encompass all existing kinds of domestic wooden floor constructions. Most floors encountered in practice by the authors would fall towards the lower end of the feasible range.

Examination of the figure shows that a, b and RSI are all important variables for SS-F-SS-F floors and for SS-SS-SS-SS floors. As would be expected RSI has no influence upon the SS-SS beam solution and b has only a secondary effect in that case. For SS-SS-SS-SS floors the fundamental natural frequency is raised substantially with any significant increase in across joist stiffness irrespective of the values of a and b. This is because it becomes necessary to input large quantities of strain energy to produce the two way curvature associated with maintaining the edge conditions of zero vertical displacement at all four edges.

By far the most interesting relationships in Figure 3.1 are those associated with SS-F-SS-F floors. As can be seen, when RSI is increased there occurs a transition in the root of equation (2.11) which gives the solution. Bearing in mind the likely practical range in values for RSI, it seems improbable that such a transition would be observed in experimental studies, or would be encountered in practice.

Comparing results from equations (2.10), (2.14) and (2.17) it would appear that the SS-SS beam solution equation (2.14), will in most practical cases give a good estimate of the fundamental natural frequency of either a SS-F-SS-F floor or a SS-SS-SS-SS floor.

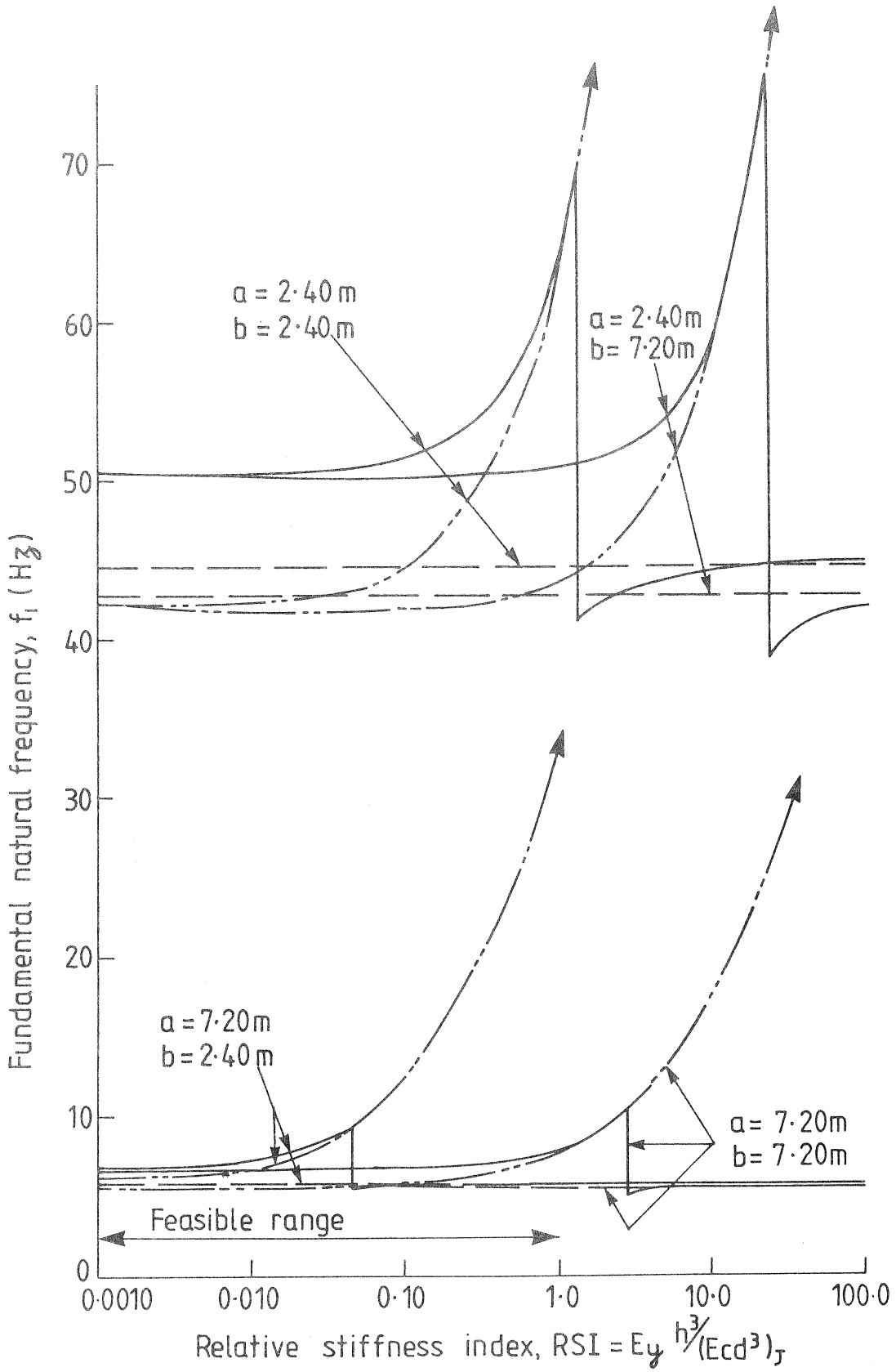


Key:— ——— SS – F – SS – F floor solution, equation (2·10)
— — — SS – SS beam solution, equation (2·14)
—·—·— SS–SS–SS–SS floor solution, equation (2,17)

Figure 3·1 Sensitivity analysis

## 4. Five lowest natural frequencies of SS-SS-SS-SS joist and sheathing floors

The objective of this section is to examine whether there is a consistent ordering of the higher order model frequencies predicted using equation (2.20). To elucidate the answer to this question the range of SS-SS-SS-SS floors arrangements considered in the previous section have been studied again. Tables 4.1 to 4.4 show the influence of variations in a, b and RSI on predicitions for the five lowest natural frequencies for floors. It can be seen that there is no generally valid ordering of values for $f_{N,M}$. However the theoretical predictions do support the previously mentioned experimental observation by Ohlsson, (6), and by Chui, (2), that for floors likely to be found in domestic dwellings, the five lowest natural frequencies are likely to be; $f_{1,1} < f_{1.2} < f_{1,3} < f_{1,4} < f_{1,5}$ when $a \leq b$.

## 5. Discussion and conclusions

The objective of this paper is to give designer useable methods of predicting the dynamical response of light-weight wooden joisted floors. However, this is only one part of the overall equation needed to predict the likely acceptability of a particular design solution. The designer also requires a design criterion which relates parameters such as the fundamental natural frequency, or several of the lower natural frequencies, of a floor to the likely 'levels' of vibration that will be acceptable to the end-user(s), i.e. occupant(s) of a building. Recent work by Chui,(3), has indicated that human perception of, and tolerance thresholds on, vertical vibrations are related to quantitative measures such as amplitude, velocity and damping of the vibrations and qualitative factors related to use of a building or even a specific part of it. Root means square acceleration, r.m.s., due to a defined impulse of a magnitude related to end use conditions appears to be the best criterion. The question of how to relate an acceptance threshold for r.m.s. to easily calculatable parameters such as natural frequencies is the topic of ongoing studies by the second author and will be reported elsewhere.

Table 4.1 Five lowest natural frequencies: a = 2.40 m, b = 2.40 m

| | | Relative stiffness index, RSI | | | |
|---|---|---|---|---|---|
| | | 0.001 | 0.010 | 0.10 | 1.0 |
| Natural Frequencies (Hz) | $f_1$ (N,M) | 32.1 (1,4) | 42.0 (1,1) | 44.2 (1,1) | 62.5 (1,1) |
| | $f_2$ (N,M) | 41.8 (1,1) | 45.0 (1,2) | 61.5 (1,2) | 147.0 (1,2) |
| | $f_3$ (N,M) | 42.9 (1,2) | 53.4 (1,3) | 102.9 (1,3) | 177.2 (2,1) |
| | $f_4$ (N,M) | 45.1 (1,3) | 69.9 (1,4) | 161.6 (2,1) | 245.8 (2,2) |
| | $f_5$ (N,M) | 54.5 (1,5) | 87.5 (2,4) | 170.8 (2,2) | 297.1 (1,3) |

Table 4.2 Five lowest natural frequencies: a = 2.40 m, b = 7.20 m

| | | Relative stiffness index, RSI | | | |
|---|---|---|---|---|---|
| | | 0.001 | 0.010 | 0.10 | 1.0 |
| Natural Frequencies (Hz) | $f_1$ (N,M) | 41.5 (1,1) | 41.6 (1,1) | 41.7 (1,1) | 43.3 (1,1) |
| | $f_2$ (N,M) | 41.6 (1,2) | 41.7 (1,2) | 42.5 (1,2) | 49.6 (1,2) |
| | $f_3$ (N,M) | 41.8 (1,3) | 42.0 (1,3) | 44.2 (1,3) | 62.5 (1,3) |
| | $f_4$ (N,M) | 42.1 (1,4) | 42.6 (1,4) | 47.6 (1,4) | 83.0 (1,4) |
| | $f_5$ (N,M) | 42.4 (1,5) | 43.5 (1,5) | 53.2 (1,5) | 111.3 (1,5) |

Table 4.3 Five lowest natural frequencies: a = 7.20 m, b = 2.40 m

| | | Relative stiffness index, RSI | | | |
|---|---|---|---|---|---|
| | | 0.001 | 0.010 | 0.10 | 1.0 |
| Natural Frequencies (Hz) | $f_1$ (N,M) | 5.9 (1,1) | 6.7 (1,1) | 11.8 (1,1) | 33.1 (1,1) |
| | $f_2$ (N,M) | 7.6 (1,2) | 14.4 (1,2) | 23.1 (2,1) | 43.2 (2,1) |
| | $f_3$ (N,M) | 11.6 (1,3) | 20.0 (2,1) | 40.0 (1,2) | 62.5 (3,1) |
| | $f_4$ (N,M) | 19.7 (2,1) | 24.5 (2,2) | 44.2 (3,1) | 91.5 (4,1) |
| | $f_5$ (N,M) | 20.9 (2,2) | 29.8 (1,3) | 46.1 (2,2) | 124.3 (1,2) |

Table 4.4 Five lowest natural frequencies: a = 7.20 m, b = 7.20 m

| | | Relative stiffness index, RSI | | | |
|---|---|---|---|---|---|
| | | 0.001 | 0.010 | 0.10 | 1.0 |
| Natural Frequencies (Hz) | $f_1$ (N,M) | 5.5 (1,1) | 5.6 (1,1) | 5.8 (1,1) | 7.6 (1,1) |
| | $f_2$ (N,M) | 5.6 (1,2) | 5.8 (1,2) | 7.5 (1,2) | 16.6 (1,2) |
| | $f_3$ (N,M) | 5.9 (1,3) | 6.7 (1 3) | 11.8 (1,3) | 21.2 (2,1) |
| | $f_4$ (N,M) | 6.2 (1,4) | 8.3 (1,4) | 18.9 (1,4) | 28.4 (2,2) |
| | $f_5$ (N,M) | 6.8 (1,5) | 10.9 (1,5) | 19.6 (2,5) | 33.1 (1,3) |

It is apparent from the sensitivity studies previously discussed that increasing across joist stiffness of a wooden floor is an effective means of increasing natural frequencies of either SS-F-SS-F or SS-SS-SS-SS floors. The most obvious way in which this could be achieved is by making the floor sheathing, and any sheathing to the underside of joists, act together with blockings to form effective composite cross-sections resisting bending in the across joist direction. Ways of doing this economically are being considered by the Timber Research and Development Association, United Kingdom in conjunction with Chalmers University of Technology, Sweden.

The following conclusions are drawn on the basis of this paper.

1. For normal types of light-weight wooden floor construction a good approximation of the fundamental natural frequency for a floor with either SS-F-SS-F or SS-SS-SS-SS edges can be obtained by assuming the floor behaves as a simply supported beam, equation (2.14).

2. There is no generally valid ordering of the modal displacement shapes for SS-SS-SS-SS light-weight wooden floors.

3. The five lowest natural frequencies for SS-SS-SS-SS light-weight wooden floors are likely to be

   $$f_{1,1,} < f_{1,2} < f_{1,3} < f_{1,4} < f_{1,5}$$

   when the floor span is greater than or equal to the floor width.

Aknowledgement

The authors wish to thank Dr. Sven Ohlsson of Chalmers University of Technology, Göteborg, Sweden for the valuable discussions on floor vibration problems in wooden buildings.

References

1. CHUI, Y. H., KEARLEY, V. C. and SMITH, I. Evaluation of vibrational performance of light-weight wooden floors: State-of-the-art and recommendations for future research. Timber Research and Development Association Research Report 3/85, Hughenden Valley, TRADA. 1985.

2. CHUI, Y. H. Evaluation of vibrational performance of light-weight wooden floors: Determination of effects of changes in construction variables on vibrational characteristics. TRADA Research Report 2/86, Hughenden Valley, TRADA. 1986.

3. CHUI, Y. H. Evaluation of vibrational performance of light-weight wooden floors: Methods of assessment of floor vibration due to human footsteps. TRADA Research Report 3/86, Hughenden Valley, TRADA. 1986.

4. FOSCHI, R. O. Structural analysis of wood floor systems. Journal of the Structural Divsiion. ASCE, July 1982, 108 (ST7), 1557-1574.

5. McCUTCHEON, W. J. Method for predicting the stiffness of wood-joist floor systems with partial composite action. US Department of Agriculture Forest Service Research Paper FPL 289, Madison, USDA. 1977.

6. OHLSSON, S. Floor vibrations and human discomfort. Ph.D. Thesis, Chalmers University of Technology, Göteborg. 1982.

7. OHLSSON, S. Svikt, svangningar och styvchet hos bjalklag - Dimensioneringsmetoder. Byggforskningsradet T20. Stockholm, Statens rad for byggnadsforskning. 1984.

8. SMITH, I. Series type solutions for built-up beams with semi-rigid connections. Institution of Civil Engineers - Proceedings - Part 2. September 1980, 69 (8352), 707-719.

9. WARBURTON, G. B. The dynamical behaviour of structures. 2nd edition, Oxford, Pergamon Press. 1984.

## Appendix I - Flexural rigidity associated with $i^{th}$ joist of floor with sheathing to top only

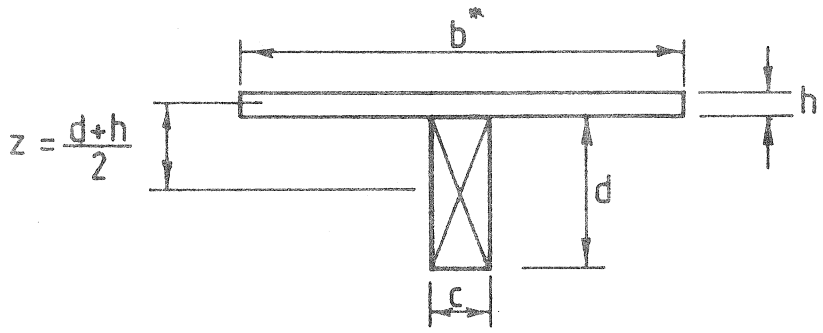


For interior joists: $$b^* = \frac{b}{n-1} \qquad \ldots\ (I.i)$$

For edge joists: $$b^* = \frac{b}{2(n-1)} + \frac{c}{2} \qquad \ldots\ (I.ii)$$

The flexural rigidity of $i^{th}$ joist is approximately given by:

$$(EI)_i = EI_{section} - \frac{E_x\, b^*\, h^3}{12} \qquad \ldots\ (I.iii)$$

with $EI_{section}$ determined in accordance with Smith's solution, (8):

$$EI_{section} = \frac{EI}{\left[1 - \frac{z^2}{(\beta + \frac{s\, N^2\, \pi^2}{k\, a^2})\, EI}\right]} \qquad \ldots\ (I.iv)$$

where:

$$EI = \frac{(Ecd^3)}{12}\, i + \frac{E_x\, b^*\, h^3}{12}$$

= sum of local flexural rigidities for joist and sheathing

$$\beta = \frac{1}{b^* \, h \, E_x} + \frac{1}{(Ecd)_i} + \frac{z^2}{EI}$$

$\frac{k}{s}$ = slip modulus per unit length of joist to sheathing connection ($N/m^2$)

(for discrete fasteners such as nails; k = force per nail per unit slip and s = fastener spacing).

N = number of half wave lengths associated with the vibrational mode, see equation (2.18),

a = joist span

For floors with gaps in the sheathing perpendicular to the span of the joists, McCutcheon, (5), has shown that a good approximation for $EI_{section}$ can be found by substituting a' for a in equation (I.iv), where a' is the effective length of sheathing to joist contact between adjacent gap in the sheathing. In estimating a' due allowance should be made for end distances when using discrete fasteners such as nails.