EHLBECK

INTERNATIONAL COUNCIL FOR BUILDING RESEARCH STUDIES AND DOCUMENTATION

WORKING COMMISSION W18 - TIMBER STRUCTURES

CIB - W 18

MEETING FOURTEEN
WARSAW, POLAND
MAY 1981

CONTENTS

1 LIST OF DELEGATES

CANADA	
R O Foschi	Forintek Canada Corporation, Vancouver
C K Stieda	Council of Forest Industries, Vancouver
DENMARK	
A Egerup	Technical University of Denmark, Copenhagen
M Johansen	Danish Building Research Institute, Horsholm
H J Larsen (3)	Aalborg University Centre, Aalborg
FINLAND	
J Kangas	Technical Research Centre of Finland, Helsinki
U Saarelainen	Technical Research Centre of Finland, Helsinki
FEDERAL REPUBLIC OF GERMANY	
H Brüninghoff	Ingenieurbüro für Bauwesen Baustatistik, Ilm
J Ehlbeck	Universität Karlsruhe, Karlsruhe
NETHERLANDS	
J Kuipers	Stevin Laboratory, Delft
NORWAY	
N Bovim	Norsk Treteknisk Institutt, Oslo
POLAND	
B Bany	Research & Development Centre for Industrial Building, Warsaw
Z Dziarnowski	Technical University of Warsaw, Warsaw
S Kus	Research & Development Centre for Industrial Building, Warsaw
W Marosz	Union of Building Joinery Industry, Warsaw
Z Mielczarek	Technical University, Szczecin
W Nozynski	Centralny Osrodek Badawczo, Laskowa
Miss B Scypenshe	Stolbud, Warsaw
SWEDEN	
B Källsner	Swedish Forest Products Research Laboratory, Stockholm
B Norén	Swedish Forest Products Research Laboratory, Stockholm
SWITZERLAND	
U Meierhofer	Federal Laboratories for Materials Testing, Dubendorf
UNITED KINGDOM	
(1) J G Sunley	Timber Research and Development Association, High Wycombe
(2) J R Tory	Building Research Establishment, Princes Risborough
UNITED STATES OF AMERICA	
D H Brown	American Plywood Association, Tacoma
V Ellebracht	American Plywood Association, Bad Soden, Germany
G Stern	Virginia State Polytechnic Institute, Blacksburg
INTERNATIONAL STANDARDS ORGANISATION	
Mrs A Sørensen	Secretariat ISO/TC 165 Timber Structures, Copenhagen, Denmark

(1) Co-ordinator and Chairman
(2) Technical Secretary

(3) Building Research Institute, Hørsholm from September 1981

2 CHAIRMAN'S INTRODUCTION

Mr SUNLEY, the co-ordinator of CIB-W18 welcomed delegates to the meeting. He reminded them that this was the last meeting for the present secretariat and during this meeting it would therefore be necessary to make alternative arrangements for the secretariat. Requests had been received from CIB for the formation of sub-groups for glued laminated members and timber framed housing. MR SUNLEY invited informal discussion on these topics before the meeting closed.

3 CO-OPERATION WITH OTHER ORGANISATIONS

ISO/TC 165: MRS SØRENSEN circulated paper CIB-W18/14-103-1 'Comments on document ISO/TC 165 N52 Timber structures; solid timber in structural sizes; determination of some physical and mechanical properties' and paper CIB-W18/14-103-2 'Comments from Dr R H Leicester on the CIB Structural Timber Design Code'. She reported that the draft standard on joints testing had been discussed and agreed and was now to be distributed for voting.

PROF LARSEN said that a joint TC 139/TC 165 committee had been set up to discuss plywood testing, principally on the basis of the RILEM/CIB testing standard. A working group had also been formed to formulate an international system of strength classes for solid timber and consideration was also being given to a class grouping system for board materials.

The next meeting of ISO TC/165 will be held in Athens, Greece on 12 and 13 October 1981.

RILEM: PROFESSOR KUIPERS reported that three final recommendations for testing standards had now been published; for joints, solid timber and plywood. Annex 1A to the joints standard had been published as a tentative recommendation and at the meeting which had immediately preceded the W18 meeting they had agreed the final recommendations for that annex on integral nail plates. Annexes for nails and staples are also being prepared.

PROFESSOR KUIPERS also drew attention to the need for documents on sampling to support the test standards and asked for guidance on the climatic conditions for the testing and conditioning of specimens.

After a brief discussion it was agreed that the preferred reference climate for testing should be the ISO standard 20 $\pm$ 2°C 0.65 $\pm$ 0.05 rh but that the testing standards should not exclude the possibility of testing in other conditions.

PROFESSOR KUIPERS said that committee TSB 57, which is concerned with the testing of board materials and timber structures, had made no progress since the last meeting of W18.

CEI-Bois/FEMIB: MR SUNLEY reported that there had been some difficulties, mainly adminstrative, between W18 and CEI-Bois but it had been generally agreed that W18 should have the principal role in design and that CEI-Bois should lead in producing manufacturing standards for glulam. The meeting agreed that papers CIB-W18/14-12-1 'Proposals for CEI-Bois/CIB-W18 Glulam Standards' and CIB-W18/14-12-2 'Guidelines for the Manufacturing of Glued Load-bearing Timber Structures' should be presented to CEI-Bois as a basis for glulam standards.

DR EGERUP told the meeting that CEI-Bois had identified a need for design methods for trussed rafters and joints and hoped to contribute in these areas to the CIB Code.

ECE: MR SUNLEY said that at a meeting in June 1981 the ECE would be discussing the revision of their grading rules and finger-jointing standard. In May 1981 an Anglo/Scandinavian group would be meeting to discuss characteristic strength values for European redwood/whitewood and how they should relate to the ECE grading rules.

PROFESSOR KUIPERS asked why the proposals for characteristic stresses had not been presented to CIB-W18.

DR NOREN said that the Anglo/Scandinavian meeting would simply be a meeting of the interested parties in a joint research project. There were doubts about the tentative stresses associated with the ECE grades and these were being investigated. The meeting would not be defining the stresses for the ECE grades.

MR SUNLEY undertook to remind ECE of their agreement that CIB-W18 should be responsible for assigning characteristic stresses to grades.

IUFRO: The IUFRO World Congress will be held in Kyoto, Japan, 6 September to 17 September 1981. Group S5.02 will meet again in Götenborg, Sweden in May 1982.

4 TRUSSED RAFTER SUB-GROUP

DR EGERUP reported that the trussed rafter sub-group, at their meeting the previous day, had made very little progress towards providing either a complex or a simplified design method for trussed rafters. However, models for the design of joints were being studied in Canada and the Nordic countries and there was also the possibility of some contribution from CEI-Bois.

DR NOREN said that he would like to circulate to the sub-group the Nordic proposals for the mathematical modelling of trusses and joints.

5 PLYWOOD SUB-GROUP

DR NOREN reported that the meeting planned for the previous day had been cancelled. There had been no progress with the sampling problems and it seemed unlikely that a purely statistical solution could be found.

6 OTHER SUB-GROUPS

There was very little support for the formation of a glulam sub-group.

MR SUNLEY proposed that a timber-framed housing sub-group be formed. He was supported by Dr Egerup and Professor Zus.

PROFESSOR LARSEN agreed with Dr Egerup that the simple design of individual members led to conservative framed houses but he pointed out that an analytical solution would be even more complex than for trussed rafters and that had so far been found impossible.

It was agreed that Mr Sunley should draft and circulate terms of reference for a timber-framed housing sub-group seeking support and technical contributions.

7 BOARD MATERIALS

MR BROWN introduced paper CIB-W18/14-4-1 'An Introduction to Performance Standards for Wood-base Panel Products' explaining how the test methods devised by the American Plywood Association exceeded the US Building Code requirements and how they were applicable to all board materials. He emphasised the importance of quality control to maintain the required performance.

PROFESSOR LARSEN said that performance standards were not part of timber engineering. MR TORY agreed and suggested that if the performance requirements were in terms of stresses and moduli they would be more relevant to CIB-W18.

MR BROWN pointed out that moisture movement and durability were included in the performance standard as well as strength and stiffness.

After a brief discussion of paper CIB-W18/14-4-2 'Proposal for Presenting Data on the Properties of Structural Panels' DR NOREN agreed to ask Mr Schmidt to expand on his proposals for a standard form of presentation for board material properties and to take into account the many properties not included in his paper.

8 JOINTS

DR NOREN introduced paper CIB-W18/14-7-1 'Design of Joints with Nail Plates' as a corrected version of the paper discussed in Otaneimi (paper 13-7-4) and suggested that the method could now be included in the CIB Code.

DR KUIPERS distributed paper CIB-W18/14-7-7 'Comments on CIB-W18/14-7-1'.

Several delegates pointed out that some calibration of this analytical method against test results was required and DR EGERUP said that the method did not produce results comparable with the Danish design rules in all cases.
It was agreed that the decision taken in Otaniemi regarding the insertion of Mr Bovim's amended paper CIB-W18/13-100-4 (see Proceedings of Meeting 13, page 9) should be implemented but that Dr Norén's proposal should be deferred until calibration has been completed.

Paper CIB-W18/14-7-3 'Load-Slip Relationship of Nailed Joints' was introduced by PROFESSORS EHLBECK and LARSEN. They explained that it had been produced in response to a request from an earlier W18 meeting. They agreed to reconsider the content when DR FOSCHI pointed out that formula (15) implied very high stiffness at low loads.

9 GLUED-LAMINATED TIMBER

Mr Riberholt's paper, CIB-W18/14-12-3 'Double Tapered Curved Glulam Beams' was presented by PROFESSOR LARSEN. He said that the method adopted by Riberholt used improved elements for the finite element analysis and took into account the whole beam. Mr Riberholt was discussing with Mr Gehri (see paper CIB-W18/14-12-4) how to present the conclusions from this paper in a suitable form for the CIB Code.

10 CIB STRUCTURAL TIMBER DESIGN CODE

PROFESSOR LARSEN told delegates that the CIB Structural Timber Design Code (fifth edition) had been circulated by ISO/TC 165. Comments would be considered at their next meeting in October 1981.

The following comments were made on the content of the CIB Code:

Clause 2.1.1: DR FOSCHI pointed out the difficulty of estimating fifth percentiles with 75 per cent confidence from small samples. PROFESSOR KUS supported the existing definition because it was consistent with that used for concrete and steel.

Clause 2.2: PROFESSOR EHLBECK said that the definitions for moisture classes 1 and 2 were rather vague and that moisture class 1 would never occur in Europe.

Figure 2.2: MR JOHANSEN suggested that the lines enclosing the shaded area should be slightly curved.

Clause 2.3: PROFESSOR KUIPERS will make alternative proposals for clause 2.3 and Table 2.3.

Table 4.1.1: MR TORY questioned the inclusion of table 4.1.1. He said that there was insufficient evidence to support the values given.

PROFESSOR LARSEN, supported by MR SUNLEY, said that although there was little to support these stresses they had been included to simulate interest in the strength class system. He reminded delegates that Dr Leicester was working on an international strength class system and how species/grades should be assigned to the classes. PROFESSOR LARSEN also appealed to delegates to identify the characteristic stresses corresponding to their present national design stresses.

Formula 5.1.1.c: The format of this equation is to be changed to that used for formula 5.2.1.c.

Clause 6.1.4: PROFESSOR KUS asked for a sentence to be included in this clause to say that the reduction in the timber cross-section because of connector fittings should be taken into account.

Clause 6.1.5: MR BOVIM's proposal, as amended at the Otaniemi meeting (see meeting 13, page 9) is to be included.

Chapter 7: PROFESSOR EHLBECK and PROFESSOR LARSEN are to check that Table 7.2 is consistent with Chapter 6.

Chapter 8: PROFESSOR KUIPERS suggested that dowel holes should be drilled a slightly smaller diameter than the dowel.

Chapter 9: PROFESSOR KUIPERS asked why the charring rates for tension and compression members were greater than for bending members.

PROFESSOR LARSEN is to amend the text so that the 25 per cent increase in charring rates applies to vertical members, however loaded.

11 OTHER BUSINESS

PROFESSOR KUIPERS asked that a sub-group be formed to consider the problems of sampling in general.

DR FOSCHI asked that Canada should be represented in the group. MR TORY said that the United Kingdom might be able to contribute but with a bias towards interpretation rather than sampling. PROFESSOR EHLBECK offered a contribution from Germany and PROFESSOR KUS expressed an interest and could contribute by correspondence.

MR SUNLEY, on behalf of the membership of CIB-W18, thanked MR TORY and the United Kingdom Building Research Establishment for their valuable contributions to the Secretariat of W18. He announced that in future the United Kingdom Timber Research and Development Association would be responsible for general enquiries, organising meetings and for preparing the proceedings. The University of Karlsruhe will produce and circulate the proceedings. Some funds would have to be raised to finance the secretariat and these would be raised by making a charge for the proceedings. It is expected that those attending meetings will feel committed to purchasing the proceedings.

At the close of the meeting PROFESSOR KUS expressed his gratitude to all the delegates for attending the meeting at what he described as a difficult time for Poland.

MR SUNLEY in replying to Professor Kus, thanked him and the other Polish delegates for the opportunity that had been presented to see and appreciate Warsaw and Polish hospitality. He congratulated the Poles on their admirable and correct mixture of friendliness and efficiency and he thanked them for the facilities that had been made available for the meeting.

12 NEXT MEETING

The next meeting of CIB-W18 will take place during June 1982 in Karlsruhe, Federal Republic of Germany. Our host will be PROFESSOR EHLBECK.

The meeting-after-next will probably be held in Oslo, Norway in June 1983.

The chairmen of sub-groups are invited to arrange meetings of their sub-groups well in advance of the main meetings.

13 PAPERS PRESENTED AT THE MEETING

3

CIB-W18/14-4-1	An Introduction to Performance Standards for Wood-Base Panel Products - D H Brown.
CIB-W18/14-4-2	Proposal for Presenting Data on the Properties of Structural Panels - T Schmidt.
CIB-W18/14-7-1	Design of Joints with Nail Plates (second edition) - B Norén.
CIB-W18/14-7-2	Method of Testing Nails in Wood (second draft, August 1980) - B Norén.
× CIB-W18/14-7-3	Load-Slip Relationship of Nailed Joints - J Ehlbeck and H J Larsen.
CIB-W18/14-7-4	Wood Failure in Joints with Nail Plates - B Norén.
CIB-W18/14-7-5	The Effect of Support Eccentricity on the Design of W- and WW- Trusses with Nail Plate Connectors - B Källsner.
CIB-W18/14-7-6	Derivation of the Allowable Load in Case of Nail Plate Joints Perpendicular to Grain - K Möhler.
CIB-W18/14-7-7	Comments on CIB-W18/14-7-1 - T A G M van der Put
CIB-W18/14-12-1	Proposals for CEI-Bois/CIB-W18 Glulam Standards - H J Larsen.
CIB-W18/14-12-2	Guidelines for the Manufacturing of Glued Load-Bearing Timber Structures - Stevin Laboratory.
CIB-W18/14-12-3	Double Tapered Curved Glulam Beams - H Riberholt.
CIB-W18/14-12-4	Comment on CIB-W18/14-12-3 - E Gehri.
CIB-W18/14-14-1	Wood Trussed Rafter Design - Th Feldborg and M Johansen.
CIB-W18/14-14-2	Truss Plate Modeling in the Analysis of Trusses - R O Foschi.
CIB-W18/14-14-3	Cantilevered Timber Trusses - A R Egerup.
CIB-W18/14-103-1	Comments on ISO/TC165 N 52 'Timber Structures; Solid Timber in Structural Sizes; Determination of some Physical and Mechanical Properties'.
CIB-W18/14-103-2	Comments on the CIB Structural Timber Design Code - R H Leicester.

Technical papers presented to CIB-W18 are identified by a code CIB-W19/a-b-c, where:

a denotes the meeting at which the paper was presented. Meetings are classified in chronological order:

1 Princes Risborough, England; March 1973
2 Copenhagen, Denmark; October 1973
3 Delft, Netherlands; June 1974
4 Paris, France; February 1975
5 Karlsruhe, Federal Republic of Germany; October 1975
6 Aalborg, Denmark; June 1976
7 Stockholm, Sweden, Feb/March 1977
8 Brussels, Belgium, October 1977
9 Perth, Scotland; June 1978
10 Vancouver, Canada; August 1978
11 Vienna, Austria; March 1979
12 Bordeaux, France; October 1979
13 Otaniemi, Finland; June 1980
14 Warsaw, Poland; May 1981

b denotes the subject:

1 Limit State Design
2 Timber Columns
3 Symbols
4 Plywood
5 Stress Grading
6 Stresses for Solid Timber
7 Timber Joints and Fasteners
8 Load Sharing
9 Duration of Load
10 Timber Beams
11 Environmental Conditions
12 Laminated Members
13 Particle and Fibre Building Boards
14 Trussed Rafters
15 Structural Stability
16 Fire
17 Statistics and Data Analysis
100 CIB Timber Code
101 Loading Codes
102 Structural Design Codes
103 International Standards Organisation
104 Joint Committee on Structural Safety
105 CIB Programme, Policy and Meetings
106 International Union of Forestry Research Organisations

c is simply a number given to the papers in the order in which they appear:

Example: CIB-W18/4-102-5 refers to paper 5 on subject 102 presented at the fourth meeting of W18.

Listed below, by subjects, are all papers that have to date been presented to W18. When appropriate some papers are listed under more than one subject heading.

LIMIT STATE DESIGN

1-1-1	Paper 5 Limit State Design - H J Larsen
1-1-2	Paper 6 The use of partial safety factors in the new Norwegian design code for timber structures - O Brynildsen
1-1-3	Paper 7 Swedish code revision concerning timber structures - B Norén
1-1-4	Paper 8 Working stresses report to British Standards Institution Committee BLCP/17/2
6-1-1	On the application of the uncertainty theoretical methods for the definition of the fundamental concepts of structural safety - K Skov and O Ditlevsen
11-1-1	Safety Design of Timber Structures - H J Larsen

TIMBER COLUMNS

2-2-1	Paper 3 The Design of Solid Timber Columns - H J Larsen
3-2-1	Paper 6 Design of Built-up Timber Columns - H J Larsen
4-2-1	Paper 3 Tests with Centrally Loaded Timber Columns - H J Larsen and Svend Sondergaard Pedersen
4-2-2	Paper 4 Lateral-Torsional Buckling of Eccentrically Loaded Timber Columns - B Johansson
5-9-1	Strength of a Wood Column in Combined Compression and Bending with respect to Creep - B Kälsner and B Norén
5-100-1	Design of Solid Timber Columns - H J Larsen
6-100-1	Comments on Document 5-100-1, Design of Timber Columns - H J Larsen
6-2-1	Lattice Columns - H J Larsen
6-2-2	A Mathematical Basis for Design Aids for Timber Columns - H J Burgess
6-2-3	Comparison of Larsen and Perry Formulas for Solid Timber Columns - H J Larsen
7-2-1	Lateral Bracing of Timber Struts - J A Simon
8-15-1	Laterally Loaded Columns: Tests and Theory - H J Larsen

SYMBOLS

3-3-1	Paper 5 Symbols for Structural Timber Design - J Kuipers and B Norén
4-3-1	Paper 2 Symbols for Timber Structure Design - J Kuipers and B Norén
1	Symbols for Use in Structural Timber Design

PLYWOOD

2-4-1	Paper 1 The Presentation of Structural Design Data for Plywood - L G Booth
3-4-1	Paper 3 Standard Methods of Testing for the Determination of Mechanical Properties of Plywood - J Kuipers
3-4-2	Paper 4 Bending Strength and Stiffness of Multiple Species Plywood - C K A Stieda
4-4-4	Paper 5 Standard Methods of Testing for the Determination of Mechanical Properties of Plywood - Council of Forest Industries, BC
5-4-1	The Determination of Design Stresses for Plywood in the Revision of CP 112 - L G Booth
5-4-2	Veneer Plywood for Construction - Quality Specifications - ISO/TC 139 - Plywood, Working Group 6
6-4-1	The Determination of the Mechanical Properties of Plywood Containing Defects - L G Booth
6-4-2	In-grade versus Small Clear Testing of Plywood - C R Wilson
6-4-3	Buckling Strength of Plywood: Results of Tests and Recommendations for Calculations - J Kuipers and H Ploos van Amstel
7-4-1	Methods of Test for the Determination of the Mechanical Properties of Plywood - L G Booth, J Kuipers, B Norén, C R Wilson
7-4-2	Comments on Paper 7-4-1
7-4-3	The Effect of Rate of Testing Speed on the Ultimate Tensile Stress of Plywood - C R Wilson and A V Parasin
7-4-4	Comparison of the Effect of Specimen Size on the Flexural Properties of Plywood using the Pure Moment Test - C R Wilson and A V Parasin
8-4-1	Sampling Plywood and the Evaluation of Test Results - B Norén
9-4-1	Shear and Torsional Rigidity of Plywood - H J Larsen
9-4-2	The Evaluation of Test Data on the Strength Properties of Plywood - L G Booth

9-4-3 The sampling of Plywood and the Derivation of Strength Values (Second Draft) - B Norén

9-4-4 On the Use of the CIB/RILEM Plywood Plate Twisting Test: a progress report - L G Booth

10-4-1 Buckling Strength of Plywood - J Dekker, J Kuipers and H Ploos van Amstel

11-4-1 Analysis of Plywood Stressed Skin Panels with Rigid or Semi-Rigid Connections - I Smith

11-4-2 A Comparison of Plywood Modulus of Rigidity Determined by the ASTM and RILEM 3-TT/CIB Test Methods - C R Wilson

11-4-3 Sampling of Plywood for Testing Strength - B Norén

12-4-1 Procedures for Analysis of Plywood Test Data and Determination of Characteristic Values Suitable for Code Presentation - C R Wilson

14-4-1 An Introduction to Performance Standards for Wood-base Panel Products - D H Brown

14-4-2 Proposal for Presenting Data on the Properties of Structural Panels - T Schmidt

STRESS GRADING

1-5-1 Paper 10 Quality Specifications for Sawn Timber and Precision Timber - Norwegian Standard NS 3080

1-5-2 Paper 11 Specification for Timber Grades for Structural Use - British Standard BS 4978

4-5-1 Paper 10 Draft Proposal for an International Standard for Stress Grading Coniferous Sawn Softwood - ECE Timber Committee

STRESSES FOR SOLID TIMBER

4-6-1 Paper 11 Derivation of Grade Stresses for Timber in UK - W T Curry

5-6-1 Standard Methods of Test for Determining some Phusical and Mechanical Properties of Timber in Structural Sizes - W T Curry

5-6-2 The Description of Timber Strength Data - J R Tory

5-6-3 Stresses for EC1 and EC2 Stress Grades - J R Tory

6-6-1 Standard Methods of Test for the Determination of some Physical and Mechanical Properties of Timber in Structural Sizes (third draft) - W T Curry

7-6-1 Strength and Long-term Behaviour of Lumber and Glued-laminated Timber under Torsion Loads - K Möhler

9-6-1 Classification of Structural Timber - H J Larsen

9-6-2 Code Rules for Tension Perpendicular to the Grain - H J Larsen

9-6-3 Tension at an Angle to the Grain - K Möhler

9-6-4 Consideration of Combined Stresses for Lumber and Glued Laminated Timber - K Möhler

11-6-1 Evaluation of Lumber Properties in the United States - W L Galligan and J H Haskell

11-6-2 Stresses Perpendicular to Grain - K Möhler

11-6-3 Consideration of Combined Stresses for Lumber and Glued-laminated Timber (addition to Paper CIB-W18/9-6-4)

12-6-1 Strength Classifications for Timber Engineering Codes - R H Leicester and W G Keating

12-6-2 Strength Classes for British Standard BS 5268 - J R Tory

13-6-1 Strength Classes for the CIB Code - J R Tory

13-6-2 Consideration of Size Effects and Longitudinal Shear Strength for Uncracked Beams - R O Foschi and J D Barrett

13-6-3 Consideration of Shear Strength on End-Cracked Beams - J D Barrett and R O Foschi

TIMBER JOINTS AND FASTENERS

1-7-1 Paper 12 Mechanical Fasteners and Fastenings in Timber Structures - E J Stern

4-7-1 Paper 8 Proposal for a Basic Test Method for the Evaluation of Structural Timber Joints with Mechanical Fasteners and Connectors - RILEM - 3TT Committee

4-7-2 Paper 9 Test Methods for Wood Fasteners - K Möhler

5-7-1 Influence of Loading Procedure on Strength and Slip Behaviour in Testing Timber Joints - K Möhler

5-7-2 Recommendations for Testing Methods for Joints with Mechanical Fasteners and Connectors in Load-Bearing Timber Structures - RILEM 3TT Committee

5-7-3 CIB Recommendations for the Evaluation of Results of Tests on Joints with Mechanical Fasteners and Connectors used in Load-Bearing Timber Structures - J Kuipers

6-7-1 Recommendations for Testing Methods for Joints with Mechanical Fasteners and Connectors in Load-Bearing Timber Structures (seventh draft) - RILEM - 3TT Committee

6-7-2 Proposals for Testing Joints with Integral Nail Plates - K Möhler

6-7-3	Rules for Evaluation of Values of Strength and Deformation from Test Results - Mechanical Timber Joints - M Johansen, J Kuipers, B Norén
6-7-4	Comments to Rules for Testing Timber Joints and Derivation of Characteristic Values for Rigidity and Strength - B Norén
7-7-1	Testing of Integral Nail Plates as Timber Joints - K Möhler
7-7-2	Long Duration of Tests on Timber Joints - J Kuipers
7-7-3	Tests with Mechanically Jointed Beams with a Varying Spacing of Fasteners - K Möhler
7-100-1	CIB Timber Code Chapter 5.3 Mechanical Fasteners; CIB Timber Standard 06 and 07 - H J Larsen
9-7-1	The Design of Truss-Plate Joints - F J Keenan
9-7-2	Staples - K Möhler
11-7-1	A Draft Proposal for an International Standard: ISO Document ISO/TC 165N 38E
12-7-1	Load-carrying Capacity and Deformation Characteristics of Nailed Joints - J Ehlbeck
12-7-2	Design of Bolted Joints - H J Larsen
12-7-3	Design of Joints with Nail Plates - B Norén
13-7-1	Polish Standard BN-80/7159-04:Parts 00-01-02-03-04-05. 'Structures from Wood and Wood-based Materials. Methods of Test and Strength Criteria for Joints with Mechanical Fasteners'.
13-7-2	Investigation of the Effect of Number of Nails in a Joint on its Load-carrying Capacity - W Nozynski.
13-7-3	International Acceptance of Manufacture, Marking and control of Finger-jointed Structural Timber - B Norén.
13-7-4	Design of Joints with Nail Plates - Calculation of Slip - B Norén.
13-7-5	Design of Joints with Nail Plates - The Heel Joint - B Källsner
13-7-6	Nail Deflection Data for Design - H J Burgess
13-7-7	Test on Bolted Jonts - P Vermeyden
13-7-8	Comments to paper CIB-W18/12-7-3 ' Design of Joints with Nail-Plates' - B Norén.
13-7-9	Strength of Finger Joints - H J Larsen
13-100-4	CIB Structural Timber Design Code. Proposal for Section 6.1.5 Nail Plates - N I Bovim

14-7-1 Design of Joints with Nail Plates (second edition) - B Norén

14-7-2 Method of Testing Nails in Wood (second draft) - B Norén

14-7-3 Load-Slip Relationship of Nailed Joints - H Ehlbeck and H J Larsen

14-7-4 Wood Failure in Joints with Nail Plates - B Norén

14-7-5 The Effect of Support Eccentricity on the Design of W- and WW-Trusses with Nail Plate Connectors - B Källsner

14-7-6 Derivation of the Allowable Load in Case of Nail Plate Joints Perpendicular to Grain - K Möhler

14-7-7 Comments on CIB-W18/14-7-1 - T A G M van der Put

LOAD SHARING

3-8-1 Paper 8 Load Sharing - An Investigation on the State of Research and Development of Design Criteria - E Levin

4-8-1 Paper 12 A Review of Load Sharing in Theory and Practice - E Levin

4-8-1 Paper 13 Load Sharing - B Norén

DURATION OF LOAD

3-9-1 Paper 7 Definitions of Long Term Loading for the Code of Practice - B Norén

4-9-1 Paper 14 Long Term Loading of Trussed Rafters with Different Connection Systems - T Feldborg and M Johansen

5-9-1 Strength of a Wood Column in Combined Compression and Bending with Respect to Creep - B Källsner and B Norén

6-9-1 Long Term Loading for the Code of Practice (Part 2) - B Norén

6-9-2 Long Term Loading - K Möhler

6-9-3 Deflection of Trussed Rafters under Alternating Loading during a Year - T Feldborg and M Johansen

7-6-1 Strength and Long Term Behaviour of Lumber and Glued-Laminated Timber under Torsion Loads - K Möhler

7-9-1 Code Rules Concerning Strength and Loading Time - H J Larsen and E Theilgaan

rd

TIMBER BEAMS

4-10-1 Paper 6 The Design of Simple Beams - H J Burgess

4-10-2 Paper 7 Calculation of Timber Beams Subjected to Bending and Normal Force - H J Larsen

5-10-1 The Design of Timber Beams - H J Larsen

9-10-1 The Distribution of Shear Stresses in Timber Beams - F J Keenan

9-10-2 Beams Notched at the Ends - K Möhler

11-10-1 Tapered Timber Beams - H Riberholt

13-6-2 Consideration of Size Effects in Longitudinal Shear Strength for Uncracked Beams - R O Foschi and J D Barrett

13-6-3 Consideration of Shear Strength on End-Cracked Beams - J D Barrett and R O Foschi

ENVIRONMENTAL CONDITIONS

5-11-1 Climate Grading for the Code of Practice - B Norén

6-11-1 Climate Grading for the Code of Practice - B Norén

9-11-1 Climate Classes for Timber Design - F J Keenan

LAMINATED MEMBERS

6-12-1 Manufacture of Glued Timber Structures - J Kuipers

8-12-1 Testing of Big Glulam Timber Beams - H Kolb and P Frech

8-12-2 Instructions for the Reinforcement of Apertures in Glulam Beams - H Kolb and P Frech

8-12-3 Glulam Standard Part 1: Glued Timber Structures; Requirements for Timber

9-12-1 Experiments to Provide for Elevated Forces at the Supports of Wooden Beams with Particular Regard to Shearing Stresses and Long-term Loadings - F Wassipaul and R Lackner

9-6-4 Consideration of Combined Stresses for Lumber and Glued Laminated Timber - K Möhler

11-6-3 Consideration of Combined Stresses for Lumber and Glued Laminated Timber (addition to Paper CIB-W18/9-6-4) - K Möhler

12-12-1 Glulam Standard Part 2: Glued Timber Structures; Rating (3rd draft)

12-12-2 Glulam Standard Part 3: Glued Timber Structures; Performance (3rd draft)

13-12-1 Glulam Standard Part 3: Glued Timber Structures; Performance (4th draft)

14-12-1 Proposals for CEI-Bois/CIB-W18 Glulam Standards - H J Larsen

14-12-2 Guidelines for the Manufacturing of Glued Load-Bearing Timber Structures - Stevin Laboratory

14-12-3 Double Tapered Curved Glulam Beams - H Riberholt

14-12-4 Comment on CIB-W18/14-12-3 - E Gehri

PARTICLE AND FIBRE BUILDING BOARDS

7-13-1 Fibre Building Boards for CIB Timber Code - O Brynildsen

9-13-1 Determination of the Bearing Strength and the Load-Deformation Characteristics of Particleboard - K Möhler, T Budianto and J Ehlbeck

9-13-2 The Structural Use of Tempered Hardboard - W W L Chan

11-13-1 Tests on Laminated Beams from Hardboard under Short- and Long-term Load - W Nozynski

11-13-2 Determination of Deformation of Special Densified Hardboard Under Long-term Load and Varying Temperature and Humidity Conditions - W Halfar

11-13-3 Determination of Deformation of Hardboard under Long-term Load in Changing Climate - W Halfar

14-4-1 An Introduction to Performance Standards for Wood-Base Panel Products - D H Brown

14-4-2 Proposal for Presenting Data on the Properties of Structural Panels - T Schmidt

TRUSSED RAFTERS

4-9-1 Paper 14 Long Term Loading of Trussed Rafters with Different Connection Systems - T Feldborg and M Johansen

6-9-3 Deflection of Trussed Rafters under Alternating Loading During a Year - T Feldborg and M Johansen

7-2-1 Lateral Bracing of Timber Struts - J A Simon

9-14-1 Timber Trusses - Code Related Problems - T F Williams

9-7-1 The Design of Truss-Plate Joints - F J Keenan

10-14-1 Design of Roof Bracing - The State of the Art in South Africa - P A V Bryant and J A Simon

11-14-1 Design of Metal Plate Connected Wood Trusses - A R Egerup

12-14-1 A simple Design Method for Standard Trusses - A R Egerup

13-14-1 Truss Design Method for CIB Timber Code - A R Egerup

13-14-2 Trussed Rafters, Static Models - H Riberholt

13-14-3 Comparison of 3 Truss Models Designed by Different Assumptions for Slip and E-modulus - K Möhler

14-14-1 Wood Trussed Rafter Design - Th Feldborg and M Johansen

14-14-2 Truss Plate Modeling in the Analysis of Trusses - R O Foschi

14-14-3 Cantilever Timber Trusses - A R Egerup

14-7-5 The Effect of Support Eccentricity on the Design of W- and WW- Trusses with Nail Plate Connectors - B Källsner

FIRE

12-16-1 British Standard BS 5268 The Structural Use of Timber: Part 4 Fire Resistance of Timber Structures

13-100-2 CIB Structural Timber Design Code. Chapter 9. Performance in Fire

STATISTICS AND DATA ANALYSIS

13-17-1 On Testing Whether a Prescribed Exclusion Limit is Attained - W G Warren

CIB TIMBER CODE

2-100-1 Paper 2 A Framework for the Production of an International Code of Practice for the Structural Use of Timber - W T Curry

5-100-1 Design of Solid Timber Columns - H J Larsen

5-100-2 A Draft Outline of a Code of Practice for Timber Structures - L G Booth

6-100-1 Comments on Document 5-100-1; Design of Timber Columns - H J Larsen

6-100-2 A CIB Timber Code - H J Larsen

7-100-1 CIB Timber Code Chapter 5.3 Mechanical Fasteners; CIB Timber Standard 06 and 07 - H J Larsen

8-100-1 CIB Timber Code: List of Contents (Second Draft) H J Larsen

9-100-1 The CIB Timber Code (Second Draft)

11-100-1 CIB Structural Timber Design Code (Third Draft)

11-100-1 Comments Received on the CIB Code

11-100-3 CIB Structural Timber Design Code: Chapter 3

12-100-1 Comment on the CIB Code - Sous Commission Glulam

12-100-2 Comment on the CIB Code - R H Leicester

12-100-3 CIB Structural Timber Design Code (Fourth Draft)

13-100-1 Agreed Changes to CIB Structural Timber Design Code

13-100-2 CIB Structural Timber Design Code. Chapter 9: Performance in Fire

13-100-3a Comments on CIB Structural Timber Design Code:

13-100-3b Comments on CIB Structural Timber Design Code - W R A Meyer

13-100-3c Comments on CIB Structural Timber Design Code - British Standards Institution

13-100-4 CIB Structural Timber Design Code. Proposal for Section 6.1.5 Nail Plates - N I Bovim

14-103-2 Comments on the CIB Structural Timber Design Code - R H Leicester

LOADING CODES

4-101-1 Paper 19 Loading Regulations - Nordic Committee for Building Regulations

4-101-2 Paper 20 Comments on the Loading Regulations - Nordic Committee for Building Regulations

STRUCTURAL DESIGN CODES

1-102-1 Paper 2 Survey of Status of Building Codes, Specifications etc, in USA - E G Stern

1-102-2 Paper 3 Australian Codes for Use of Timber in Structures - R H Leicester

1-102-3 Paper 4 Contemporary Concepts for Structural Timber Codes - R H Leicester

1-102-4 Paper 9 Revision of CP 112 - First Draft, July 1972 - British Standards Institution

4-102-1 Paper 15 Comparison of Codes and Safety Requirements for Timber Structures in EEC Countries - Timber Research and Development Association

4-102-2 Paper 16 Nordic Proposals for Safety Code for Structures and Loading Code for Design of Structures - O A Brynildsen

4-102-3 Paper 17 Proposals for Safety Codes for Load-Carrying Structures - Nordic Committee for Building Regulations

4-102-4 Paper 18 Comments to Proposal for Safety Codes for Load-Carrying Structures - Nordic Committee for Building Regulations

4-102-5 Paper 21 Extract from Norwegian Standard NS 3470 "Timber Structures"

4-102-6 Paper 22 Draft for Revision of CP 112 "The Structural Use of Timber" - W T Curry

8-102-1 Polish Standard PN-73/B-3150: Timber Structures; Statistical Calculations and Designing.

8-102-2 The Russian Timber Code: Summary of Contents

9-102-1 Svensk Byggnorm 1975 (2nd Edition); Chapter 27: Timber Construction

11-102-1 Eurocodes - H J Larsen

13-102-1 Programme of Standardisation Work Involving Timber Structures and Wood-Based Products in Poland

INTERNATIONAL STANDARDS ORGANISATION

3-103-1 Paper 2 Method for Preparation of Standards Concerning the Safety of Structures - published by International Standards Organisation (ISO/DIS 3250)

4-103-1 Paper 1 A Proposal for Undertaking the Preparation of an International Standard on Timber Structures - International Standards Organisation

5-103-1 Comments on the Report of the Consultation with Member Bodies Concerning ISO/TS/P129 - Timber Structures - Dansk Ingeniorforening

7-103-1 ISO Technical Committees and Membership of ISO/TC 165

8-103-1 Draft Resolutions of ISO/TC 165

12-103-1 ISO/TC 165 Ottawa; September 1979

13-103-1 Report from ISO/TC 165

14-103-1 Comments on ISO/TC 165 N52 'Timber Structures; Solid Timber in Structural Sizes; Determination of Some Physical and Mechanical Properties'

14-103-2 Comments on the CIB Structural Timber Design Code - R H Leicester

JOINT COMMITTEE ON STRUCTURAL SAFETY

3-104-1 Paper 1 International System on Unified Standard Codes of Practice for Structures - Published by Comité Européen du Béton (CEB)

7-104-1 Volume One: Common Unified Rules for Different Types of Construction Material - CEB

CIB PROGRAMME, POLICY AND MEETINGS

1-105-1 Paper 1 A Note on International Organisations Active in the Field of Utilisation of Timber - P Sonnemans

5-105-1 The Work and Objectives of CIB-W18 - Timber Structures - J G Sunley

10-105-1 The Work of CIB-W18 Timber Structures - J G Sunley

INTERNATIONAL UNION OF FORESTRY RESEARCH ORGANISATIONS

7-106-1 Time and Moisture Effects - CIB W18/IUFRO S5.02-03 Working Party

CIB-W18/14-4-1

INTERNATIONAL COUNCIL FOR BUILDING RESEARCH STUDIES AND DOCUMENTATION

WORKING COMMISSION W18 - TIMBER STRUCTURES

AN INTRODUCTION TO PERFORMANCE STANDARDS FOR WOOD-BASE PANEL PRODUCTS

by

Daniel H. Brown
American Plywood Association
USA

Warsaw, Poland
May 1981

AN INTRODUCTION TO PERFORMANCE STANDARDS FOR WOOD-BASE PANEL PRODUCTS

by

Daniel H. Brown
American Plywood Association
USA

SUMMARY

In this paper, a brief introduction to APA performance standards for panels used in residential building construction will be given. The complete performance standards, including the procedures for qualifying panels and for continuing quality assurance are available from the American Plywood Association, PO Box 11700, Tacoma, Washington 98411, USA.

1. Introduction

Performance standards can take several different forms. For example, for bending strength they can specify the modulus of rupture that a given product must have, which is a function of its material only; or they can specify the bending moment capacity of the product, which also takes into account its cross section. In the latter case, greater panel thickness can compensate for a lower modulus of rupture in bending applications.

The American Plywood Association has taken a third approach. The in-service loads that the panels are required to support can be specified. This, in effect, is a minimum proof load that includes a suitable factor of safety. This approach has several advantages. One important advantage is that it gives the panel manufacturer latitude in designing his product to serve its purpose, utilizing his particular raw material and production facilities most effectively.

2. In-Service Conditions

Products to which these performance standards are applied include conventional plywood - made up solely of veneer; composite panels - veneer faces and various kinds of core boards (particleboard, waferboard, oriented strand board); and non-veneered panels of waferboard, particleboard, oriented strand board, etc.

Two panel categories have been established and the service loads determined for each. One category is for single-layer flooring - combination subfloor-underlayment. The other category is for sheathing - roof sheathing (over which roofing materials may be applied directly), wall sheathing and floor sheathing.

In the interests of brevity, this discussion will be confined to single-layer flooring. Our name for this category is Sturd-I-Floor.

A survey of typical "static" floor loads for residences resulted in the following information:

CONCENTRATED SERVICE LOADS ON RESIDENTIAL FLOORS

Description	Supports		Plan of Supports	Net Weight of Equipment	Estimated Live Load	Total Load per Support
	Type	Area				
Sofa bed	Buttons; Plastic casters	1/2" diam. 5/8" wide	86" 31"	200 lb	4 people @ 180 lb	$\frac{920}{4}$ = 230 lb
6-ft Grand Piano	Steel casters	1-1/2" diam. 1" wide	51" 53"	590 lb	None	35%* x590 = 210 lb
9-ft Grand Piano**	Steel casters	1-1/2" diam. 1" wide	85" 55"	1080 lb	None	35%* x1080 = 380 lb
21 cu-ft Upright Freezer	Discs	1 1/4" diam.	32" 28"	275-350 lb	21 cu ft of food @ 35 lb	$\frac{1085}{4}$ = 270 lb
31 cu-ft Upright Freezer**	Discs	1-1/4" diam.	35" 33"	375-400 lb	31 cu ft of food @ 35 lb	$\frac{1485}{4}$ = 370 lb
50 gal. Gas Water Heater	Rectangular feet	1" x 2"	20" diam.	150-225 lb	50 gal of water @ 8.33 lb	$\frac{642}{3}$ = 215 lb
75 gal. Gas Water Heater	Rectangular feet	1" x 2"	27" diam.	275-350 lb	75 gal of water @ 8.33 lb	$\frac{975}{3}$ = 325 lb
100 gal. Gas Water Heater**	Rectangular feet	1" x 2"	27" diam.	300-400 lb	100 gal of water @ 8.33 lb	$\frac{1233}{3}$ = 410 lb

*Load on heaviest leg
**Rarely encountered in residential applications

From this it was concluded that for the conditions generally encountered in North America, the 340 liter (75-gallon) water heater supported at three points caused the greatest loads. The 147 kg (325 lb) load at each point was adjusted upward to account for the long term nature of this load compared to a short term test load. The test load chosen was 250 kg (550 lb) and it is applied through a 25mm (1") disc.

During construction, single-layer floors are subjected to footfall loads from workmen carrying heavy objects. After study it was determined that a 180 kg (400 lb) load acting through a 76mm (3") disc is a reasonable requirement.

For panel products used in flooring applications, uniform loads are generally relatively insignificant. However, a minimum uniform live load requirement must usually be met under U. S. building regulations, so a floor live load of 488 kg per sq.m (100 lb per sq.ft.) was chosen. To this was added a dead load of 49 kg per sq.m (10 lb per sq.ft.).

Floors are also subject to impact. Impact loads come from falling objects, including people. It was decided that people jumping from furniture or ladders would result in the largest reasonable impact effects. Deflections under impact at critical locations were measured with various individuals landing feet first on floors from various heights.

Because of potential variations in results due to the energy absorption of the floor framing, all tests were conducted with the floor joists fully supported. Thus, all impact energy was absorbed by the panel. Because of variations in the way different individuals land, there was no correlation between people's weight and the deflection under impact. For 19mm (3/4") plywood over supports 406mm (16") on center, the maximum deflection was 10mm (0.4") caused by a 91 kg (200 lb) man dropping from a height of 2.1m (7 ft). Most jumps caused deflections ranging from 4mm to 6mm (0.15"- 0.25").

In addition to structural requirements, durability limits were considered. To evaluate durability requirements, over 2000 specimens were subjected to outdoor weathering. The specimens represented various bond performance levels. Companion specimens were subjected in the laboratory to various tests to evaluate their correlation with field exposure. In general, the laboratory tests indicated that panels can be exposed for up to one year during construction.

Limits on panel expansion due to wetting are also of concern. Excessive expansion can cause panels to buckle out of their original plane. Spacing between panels at their ends and edges helps, but there is also restraint caused by the fasteners. Limits were set based on linear expansion data from panels having known satisfactory performance.

3. Test Procedures and Performance Criteria

Concentrated test loads related to construction conditions are conducted on panels that have been subjected to three days continuous wetting and then tested wet. Concentrated test loads related to in-service conditions are conducted with panels dry and also after three days continuous wetting and then redrying.

Construction loads are applied through a 76mm (3") disc. In-service loads are applied through a 25mm (1") disc. Panels must support the test loads placed at the most critical location (mid-way between supports and next to a tongue-and-groove joint).

The uniform load is applied by drawing a vacuum below the test panel. Panels are required to support a uniform load of three times the total live load plus dead load (1611 kg per sq.m (330 lb per sq.ft.)).

The "standard" impact device used in North America is a cylindrical leather bag having a diameter of 250mm (10"). It is generally filled with sand. If this device is modified by filling with lead shot (2.4mm (0.095")) the results are more reproducible.

It was found that a drop height of 760mm (30") with a 13.6 kg (30 lb) bag produced deflections close to 10mm (0.4"), representative of maximum deflections observed from people jumps. The bag is dropped in 152mm (6") increments to the maximum height of 760mm (30").

To be certain that the impact load has not damaged the panel, the panel must support a 90 kg (200 lb) test load, following each impact loading, without exceeding the permissible deflection of about 1/200th of the span. The panel must also support a 181 kg (400 lb) test load following the impact load.

Two durability levels are provided and each has a separate laboratory procedure. Both are severe and correspond to outdoor exposure periods of 12 months and more. The complete procedures are given in the APA performance standards.

Linear expansion is evaluated using any one of three methods. The first is a limit on expansion due to raising the moisture content from oven dry to complete saturation in a pressure vessel. Under these conditions, the limit is 0.5%.

A second approach is to wet one side as if wetted by rain. Panels subjected to this test must also be subjected to a test of relative humidity changes from 50% to 90%. The limit under these tests is 0.30% along the major panel axis and 0.35% across the major panel axis.

The third approach is to construct a lumber frame 4.9mm by 4.9mm (16 ft. x 16 ft.) in plan, with framing spaced according to the proposed panel span rating. Overall panel movement following 14 days of continuous water spray is limited to 0.20% along the major panel axis and 0.25% across.

4. Qualification and Quality Assurance

The appropriateness of the performance standards cannot be considered without also studying their application to actual production.

The qualification policy provides that no more than one test out of 20 can fail to meet strength requirements for concentrated, impact and uniform loads. Other percentages apply to other tests.

The quality assurance policy establishes daily in-plant quality control procedures together with weekly tests by APA and random, unannounced visits by an APA quality auditor.

These requirements are designed to assure the continued maintenance of product performance comparable to that evaluated during the qualification phase.

5. Conclusion

Performance standards related to specific end-use requirements offer the manufacturer and the user important benefits. The manufacturer is able to tailor his product to meet the user's needs according to the manufacturer's specific raw material mix and production capability. The user has assurances that the product has been evaluated for its ability to perform in the specific application marked on the panel.

* * * * * * * * *

CIB-W18/14-4-2

INTERNATIONAL COUNCIL FOR BUILDING RESEARCH STUDIES AND DOCUMENTATION

WORKING COMMISSION W18 - TIMBER STRUCTURES

PROPOSAL FOR PRESENTING DATA ON THE PROPERTIES OF STRUCTURAL PANELS

by

T Schmidt

Svenska Träforskningsinstitutet
Sweden

WARSAW, POLAND
MAY 1981

SVENSKA TRÄFORSKNINGSINSTITUTET
TS/YL

Redogörelse nr:
Report no: 810409/2773/10E
Uppdragsgivare: Projekt 3056
Uppdragets art: Proposal for presenting data on the properties of structural panels

Gentlemen,

The composite panel is here to stay. So are OSB, waferboard, etc. In the marketing of the new kinds of panels very often comparisons are made between strength properties of the different panels. In order to make a comparison fair it would be of great assistance to use a standardized form. The form should preferrably be recommended by the CIB W18.

A comparison could be made based on capacities or on stresses calculated on the full thickness (panel considered homogenous). Advantages with the hereby proposed capacity way is that different thicknesses can be easily compared and that the real thickness of a panel has to be taken into account.

Please put this item on the agenda of the coming Warsaw meeting.

Enclosure: Proposal for standardized form for presenting data on structural panels.

Stockholm 1981-04-09

Torbjörn Schmidt

Torbjörn Schmidt

BI 22 10M 8.80 VT

Table Number x : Properties of structural panels presented according to recommendations from CIB W18 (Meeting in Warsaw 1981)

Type of Panel	DRY CLIMATE, CAPACITY 5%-FRACTILE, STIFFNESS 50% FRACTILE												Density	Remarks
	Thickness		Direction 0					Direction 90						
	Nominal	Real	Capacity	Stiffness	Creep ϕ			Capacity	Stiffness	Creep ϕ				
	t mm	t mm	$(f_m W)/b$ $\frac{Nmm}{mm}$	$(EI)/b$ $\frac{kNmm^2}{mm}$	10^3h	10^4h	10^5h	$(f_m W)/b$ $\frac{Nmm}{mm}$	$(EI)/b$ $\frac{kNmm^2}{mm}$	10^3h	10^4h	10^5h	$\rho_{o;\omega}$ $\frac{kg}{m^3}$	
(1)	(2)	(3)	(4)	(5)	(6)	(7)	(8)	(9)	(10)	(11)	(12)	(13)	(14)	
APA-PLYWOOD	12,5	11	500	1400	0,1	0,4	0,5	210	170	0,1	0,4	0,5	420	
OSB	13	13	4000	850	0,4	0,9	1,6	10	18	0,4	0,9	1,6	720	
WAFER	13	13	10000	8000	0,2	0,6	1,0	8000	4000	0,2	0,6	1,0	830	
CON-PLY	12,5	12	300	1000	0,1	0,4	0,5	250	800	0,3	0,8	1,4	560	

a/ b/ c/ etc,	remarks
(1) - (14)	denotations of the different columns in the table
ϕ	relative creep in dry climate at loading level (1/3 of the moment capacity)
0	(zzero direction) For a rectangular panel equal to the direction of the longest edge. For a square panel the direction with the largest capacity
90	(90 direction) Perpendicular to 0 direction

Properties tested according to ISO XXXXXX.

Publisher of this table is : American Panel Association

Responisible for the testing is : North Impartial Testing Lab Inc.

Date and place of publishing: Sea-Tac USA May 1981 .

Form number 2345678 (1981) APA

Stockholm 1981-04-10 Torbjörn Schmidt

CIB-W18/14-7-1

INTERNATIONAL COUNCIL FOR BUILDING RESEARCH STUDIES AND DOCUMENTATION

WORKING COMMISSION W18 - TIMBER STRUCTURES

DESIGN OF JOINTS WITH NAIL PLATES (second edition)

by

B Noren

Swedish Forest Products Research Laboratory
SWEDEN

WARSAW, POLAND
MAY 1981

SWEDISH FOREST PRODUCTS
RESEARCH LABORATORY
B Norén/CE
1980-07-14

DESIGN OF JOINTS WITH NAIL PLATES (Second edition)*

B Norén Swedish Forest Products Research Laboratory

Introduction

For some time a small Nordic group has discussed guide lines for design of joints with nail plates in timber structures.
Members have been N-I Bovim, Norway, M Johansen, Denmark, B Norén, Sweden and T Poutanen, Finland.
Their draft proposal contain these sections:

1. Definition and symbols
2. Design calculations
3. Material
4. Manufacture and control
5. Testing of plates and joints

Section 5 is principally a reference to the testing standard proposed by NORDTEST and based on the RILEM/CIB recommendations.

The paper, presented here, includes only Section 1 and Section 2 in which is given rules for design calculations. The outline is kept from the proposal:

2.1 Model for calculation of joints
2.2 Design against plate failure
2.3 Design against grip failure
2.4 Design against wood failure
2.5 Rules for specific joints
2.6 Calculation of slip

---

* The paper is a revised edition of CIB-W18/12-7-3 (Bordeaux, October 1979) with CIB-W18/13-7-4 and 5 (Otaniemi, June 1980) incorporated.

BI 22 7600 12.79 VT

1 DEFINITIONS AND SYMBOLS

1.1 Definitions

The structure consists of (wood) members and connections (joints) between the members. The presented design rules shall be applied within the connection boundaries which as a rule are specified cross sections of the members at some distance from their ends. The connections are designed to withstand the internal forces (axial and shear) and moments (bending and torsion) acting upon them at the boundary cross sections, as well as external forces (loads) within the boundaries. The design of the members is not dealt with here.

The forces and moments acting on the connections are determined by static calculation. For this calculation a static model of the structure is used, built of elements to describe the real members and imaginary elements to describe the behaviour of the connections.

Within the connections two types of joints (joint "lines") are defined: The plate/timber-joint (pt-joint) is the contact between the plate and the timber. The timber/timber-joint (tt-joint) is the direct joint between timbers. In general, the area of contact as well as the gap joint area are included in the definition.

1.2 Symbols

1.2.1 Directions

x- Joint direction

y- Direction of a perpendicular to the joint line in the centre of the plate sections. Positive direction is out from the studied member.

a- Specified principal direction of the plate. Positive direction is out from the studied member and part of plate.

b- Principal plate direction, perpendicular to the a-direction.

The a/b-cross is rotated the angle α from the x/y-cross. The origons of the two systems are coincident.

1.2.2 Angles

α Angle of x-direction to a-direction (y-direction to b-direction).

α_{xF} Angle of x-direction to plate force (F_p).

$\alpha_R = \alpha_{xR}$ Angle of x-direction to joint force (R).

α_{Fa} Angle of plate force (F_p) to a-direction.

ϕ Angle of friction

ϕ Polar coordinate

1.2.3 Geometry

H Width (depth) of timber.

B Thickness of timber.

a Measure of plate in a-direction.

b Measure of plate in b-direction.

c Measure of plate.

d Diagonal.

d Distance from plate to end of joint.

e Distance from plate to end of joint.

l Length of plate section in joint line

(l Projection of plate/timber joint area)

r Division of l

h Length of timber/timber joint

$h = d + l + e$

e_{RC} Distance of force to centre of rotation

e_{CG} Distance of force to centre of gravity

A Joint area

ξ Length of constant stress

1.2.4 Forces and moments

R Connection force

M Connection moment

F_t Force on timber

F_p Force on plates

M_p Moment on plates

N Force-component in the y-direction

N_a, N_b Force -components in the a- and b-directions

Q Force-component in the x-direction (joint direction)

1.2.5 Stresses

σ_c (N/mm^2)	Compression stress in wood
p or p_t (N/mm)	Tension stress in plates
p_c (N/mm)	Compression stress in plates
s (N/mm)	Shear stress in plates
τ (N/mm^2)	Shear stress in the plate/timber joint

1.2.6 Subscripts

p	Plate
t	Timber
t	(Second subscript) tension
c	Compression
a	(Force or stress) in the a-direction
b	(Force or stress) in the b-direction
D	(Force or stress) design value
0	Fibre direction
90	Perpendicular to fibre direction

2 DESIGN CALCULATIONS

2.1 Model for calculation of joints

In the general case the forces are transmitted between the connected members partly by the plates through the plate/timber joints (pt-joints) and partly by compression and corresponding friction in the timber/timber joints (tt-joints). The proportions of these parts depend on the model chosen for the behaviour of the joints.
The model for calculation of joints should correspond reasonably with the model for the entire structure, especially with respect to deformations. Total correspondance will generally imply too complex models. The model must give forces and moments transmitted in the joints which are in equilibrium with the forces and moments acting at the connection boundaries, including possible loads. This demand is unconditional. The conditions for such equilibrium are demonstrated for a joint shown in Figure 2:1. The tt-joint AB and the corresponding cross-sections CD of the two plates are in the XZ-plane, the plates and member sides in planes parallel to the XY-plane.
The central line of the member shown in the figure cuts the joint perpendicular at E at a distance ($-x_S$) from origon (0) which is central to the plate cross-sections CD. The force from connected members, acting on the member in E, is R and the bending moment is M (no torque). Part of that action takes place through the plates by the force F_p and moment M_p acting in 0, and the remaining part directly by a compression force ($-F_t$) perpendicular to the tt-joint at a distance ($-x_T$) from the y-axis and the correspondig friction force ($-\mu F_t$).

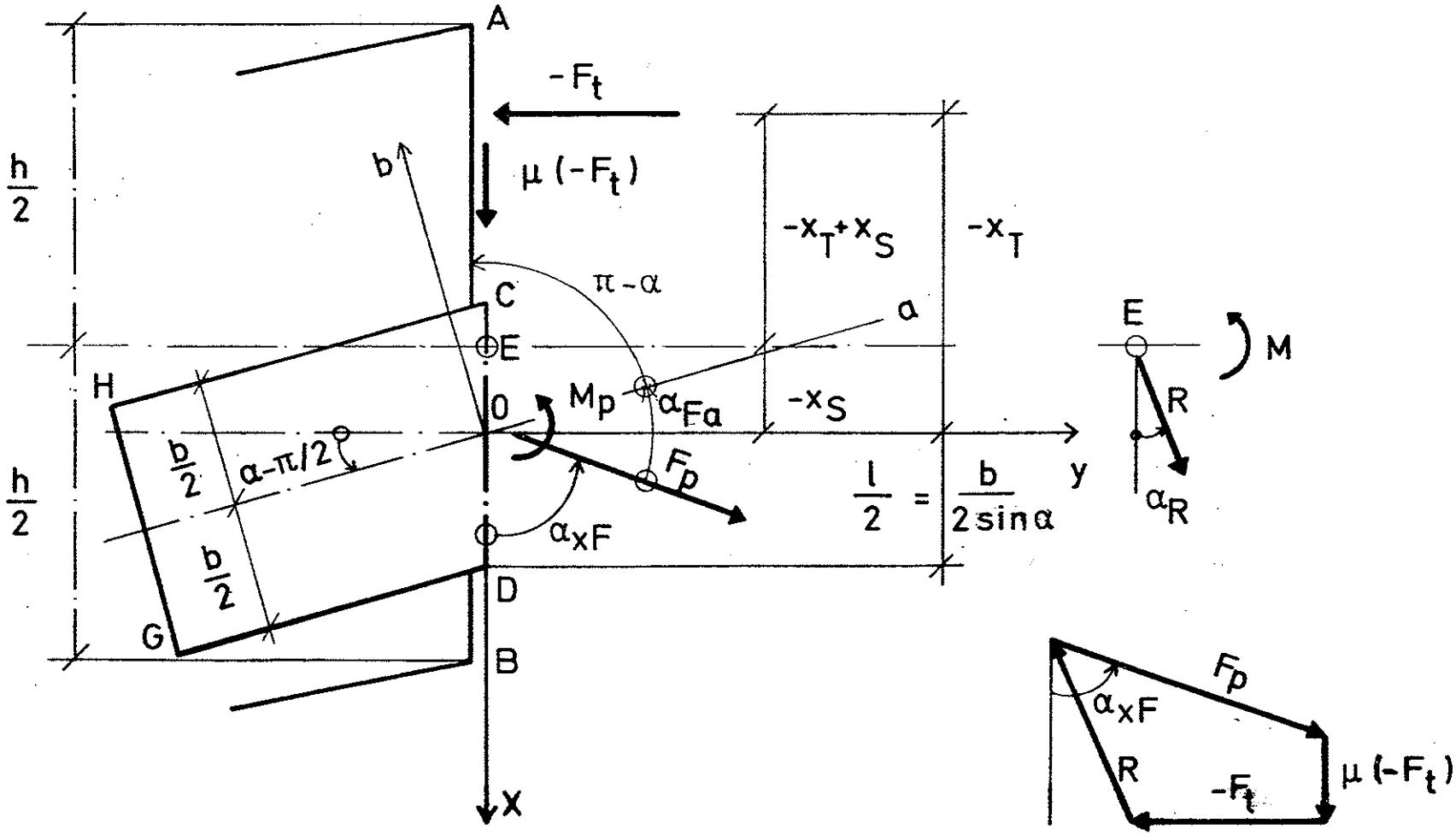

Figure 2:1 *Contact forces (t) and plate forces (p) generated by the force R and the moment M transmitted to the member.*

The following equations of equilibrium relate F_p, M_p and F_t to R and M:

$$F_p \sin\alpha_{xF} + F_t = R \sin\alpha_R \tag{1}$$

$$F_p \cos\alpha_{xF} - \mu F_t = R \cos\alpha_R \tag{2}$$

$$M_p - (-x_T)F_t = M - (-x_S)R \sin\alpha_R \tag{3}$$

Her α_R and α_{xF} denote the angles of the forces R respectively F_p to the joint (x-axis). Five quantities (all but μ in the left terms) are unknown. Hence, two additional equations are required. They are the "action-displacement" equations which in the model are replaced by equations appearing directly from assumptions on the distribution of the stresses on the wood member along AB and on the plates along CD.

When the capacity in the ultimate limit state is verified the model condition is simply that the force F_t, transmitted directly to the member, generates a constant compression stress σ_c (N/mm^2) over a length ξ_t of the tt-joint AB, while F_p generates a constant tension p (N/mm) in the cross section CD of each of the two plates. Other stresses in the y-direction (perpendicular to the joint) are not taken into account. Furthermore, the transmission of compression in the plates is neglected when there is contact between the timber members (6) and, naturally, the tt-joint is not supposed to transmit tension (7). With these assumptions the relations between forces and stresses in the joint section are

$$-F_t = \sigma_c B \xi_t = \sigma_c B(h + 2x_T - 2x_S) \tag{4}$$

$$F_p \sin\alpha_{xF} = 2p\xi_p = 2p\ (b/\sin\alpha - 2 M_p/(F_p \sin\alpha_{xF})) \tag{5a}$$

$$F_p \cos\alpha_F = 2s\ \xi_s = 2sb/\sin\alpha \tag{5b}$$

with the conditions

$$o \leq F_p \sin\alpha_F \leq pb/\sin\alpha \tag{6}$$

$$0 \leq -F_t \leq \sigma_c\ Bh \tag{7}$$

The stress directions are perpendicular to the joint (compression in the timber, σ_c, N/mm^2, and tension in the plate, p, N/mm) respectively in the direction of the joint (shear in the plate, s, N/mm). It is purposeful to use these stresses if the criteria of failure and design values are based on them. So is the case in present Nordic codes. However, the design values will then be dependent on the angle to the fibre direction (σ_{cD}) and the angle to the principal directions of the plate (p_D and s_D). This complicates the prototype testing of the plates. Hence, in the following section the design conditions for the strength of the plate are based merely on design values in the a- and b- directions of the plate. F_p and α_{xF} in equations (1) and (2) are replaced by the F_p-components N_a and N_b.

The following stresses are defined:

$$P_a = \frac{N_a}{2\xi_p \sin\alpha} \qquad \alpha = \pi/2 + \beta$$

$$P_b = \frac{N_b}{2\xi_p \cos\alpha} \qquad \xi_p = \frac{b}{\sin\alpha} - \frac{2M_p}{N_a \sin\alpha + N_b \cos\alpha}$$

$$s_a = \frac{N_a}{2b \cot\alpha}$$

$$s_b = \frac{N_b}{2b}$$

Design values for these stresses are given in the code or in certificates for plates of different types. There respective influence on the design of the joint appears from the design stipulations which are based on possible modes of failure in the plate depending on the pattern of holes.

The necessary equations when the design stipulations are given in terms of design values for the compression stress on the member perpendicular to the joint (contact area between members) and for stresses in the principal directions of the plates thus are:

$$N_a + F_t\ (\sin\alpha + \mu\cos\alpha) - R\cos(\alpha - \alpha_R) = 0 \qquad (1\ T)$$

$$N_b + F_t\ (\cos\alpha - \mu\sin\alpha) + R\ \sin(\alpha - \alpha_R) = 0 \qquad (2\ T)$$

$$M_p + x_T F_t - M - x_s\ R\sin\alpha_R = 0 \qquad (3)$$

Stresses (N/mm):

$$\sigma_c B = \frac{-F_t}{h + 2x_T - 2x_s} \qquad (4)$$

$$P_a = \frac{N_a/2}{b - 2M_p\sin\alpha/(N_a\sin\alpha + N_b\cos\alpha)} \qquad (5\ T)$$

P_b = ...

s_a = ...

s_b = ...

Limit values (design values) σ_{cD}, p_{aD} etc, are given for the stresses. In the general case σ_{cD} and at least one of the plate stress values are decisive for the joint design. When the stipulations include interaction between stresses, severel design values may have to be considered.

One complication, in spite of the assumptions of the block-distribution of stresses, is that the moment (M_p) and the forces (F_p or N_a and N_b) are implicated in the expression for the distribution length ξ_p. A simplification would be to assume that the compression stress (σ_c) in the tt-joint is constant until the neutral axis and that the same applies to the p-stresses in the plate to the limit set by the size of the plate. With this assumption, corresponding to full plastic response, ξ_p in (5) and (5T) is found from

$$\xi_p = b/\sin\alpha + d - \xi_t = b/\sin\alpha + d - (h + 2x_T - 2x_s) \qquad (8)$$

where $b/\sin\alpha$ expresses the length of the plate cross section over the joint and d is the distance along the joint from the plate to the joint end at the compression side. A condition for applicability of (8) is $\xi_p \leq b/\sin\alpha$. When ξ_p reaches the limit value $b/\sin\alpha$, it means that the stress is constant all across the plate. After that the eq. (8) cannot be applied and need not be used anyway as the moment on the plate is zero ($M_p = 0$) which simplifies (5) and (5 T).

It should be observed that the eqs. (1) to (8) concern the conditions of the very joint and the cross sections of the plate along this joint. They apply irrespective of what the angles are between the joint and the principle directions of the plates or the fibre direction of the members. These angles have no influence on the model, although they will be of great importance for the design values of the stresses or forces. Also, the transformation to a new system of axis, by rotation the angle α from the x-y-system, make the transformation of (1), (2) and (5) into (1 T), (2 T) and (5 T) pure mathematical as long as the axis a and b are not referred to as the principle directions of the plates.

The conclusion is that the scarfe-joint of figure 2:2 and the two typical heel-joints of figure 2:3 can be treated by use of the equations given in section 2.1 and 2.2 with the introduced denotations.

EXAMPLE

In the following example is referred to a splice in timber with the overlapping plates parallel to the members. However, the equations are applicable to other joints if the symbols used are referred merely to the cross section in the joint line. Thus, the presented equations and solutions may be used for the heel-joints shown in Figure 2:3 if b is replaced by $l = b/\sin\alpha$.

Three cases of distribution of forces on plates and timber, A, B and C, are treated. A is a case when the tension capacity of the plate is partly utilized, in case B the plate is fully stressed all over the cross section. Which of the two cases A or B that does apply will appear from dimensions, design values (strength values) and the proportions of axial load and moment. C is the case when the plates have to transmit all the forces, either due to a dominant tensile force or due to a too large gap between the timber members.

In the example the simplifying assumption of "full plasticity" leading to (8) has been used. The components of the forces in the x- and y-directions have been denoted N respectively Q.

General

Symbols see figure 2:2

Forces affecting the joint:

$M = M \qquad N = R \sin \alpha_R \qquad Q = R \cos \alpha_R$

Forces, transmitted directly from timber to timber:

$N_t = \sigma_c B \xi_t \qquad Q_t = \mu N_t$

Forces transmitted by the plates:

$N_p = N + N_t \qquad Q_p = Q - Q_t$

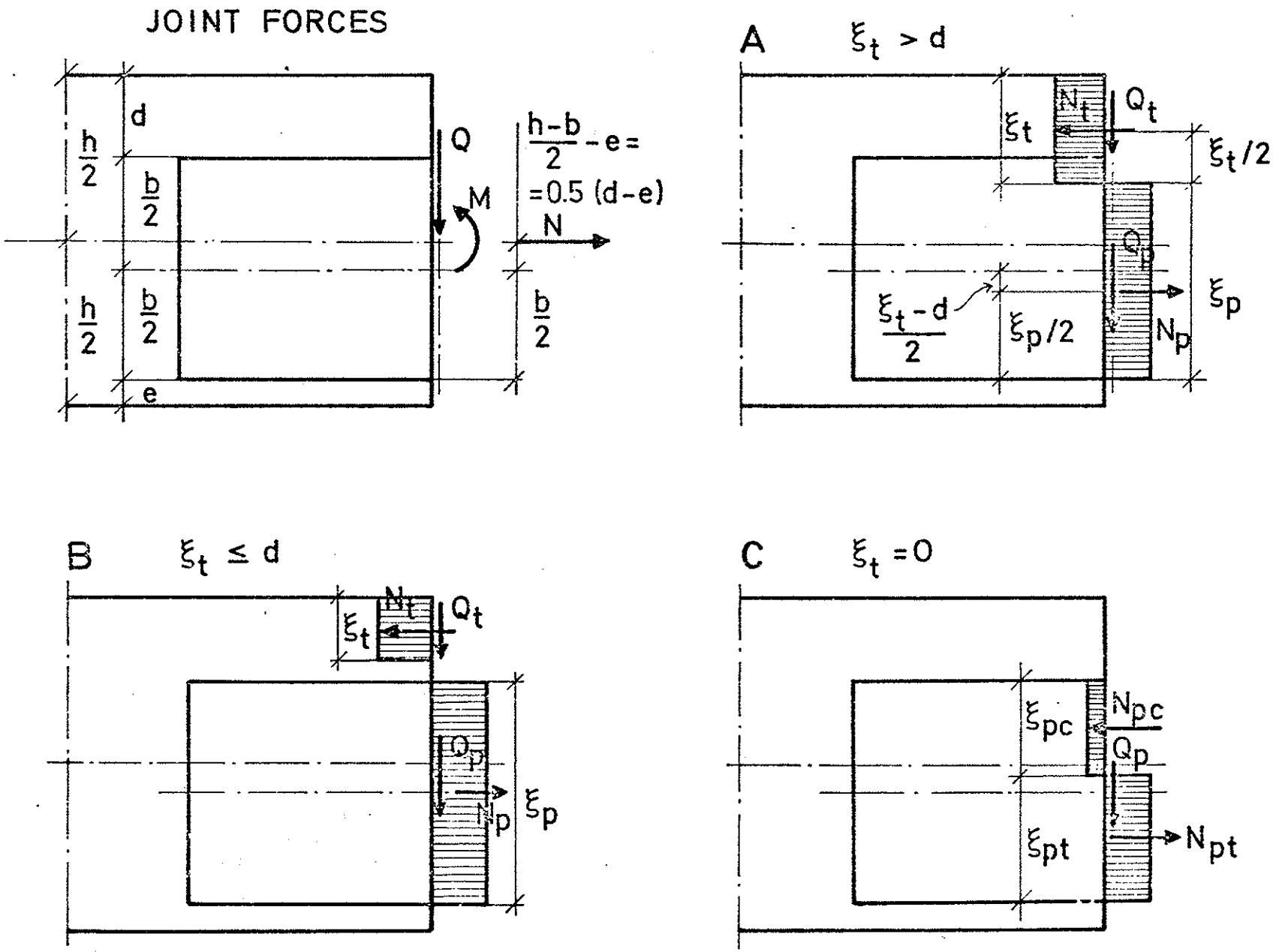

Figure 2:2 Distribution of forces in a lengthening joint.

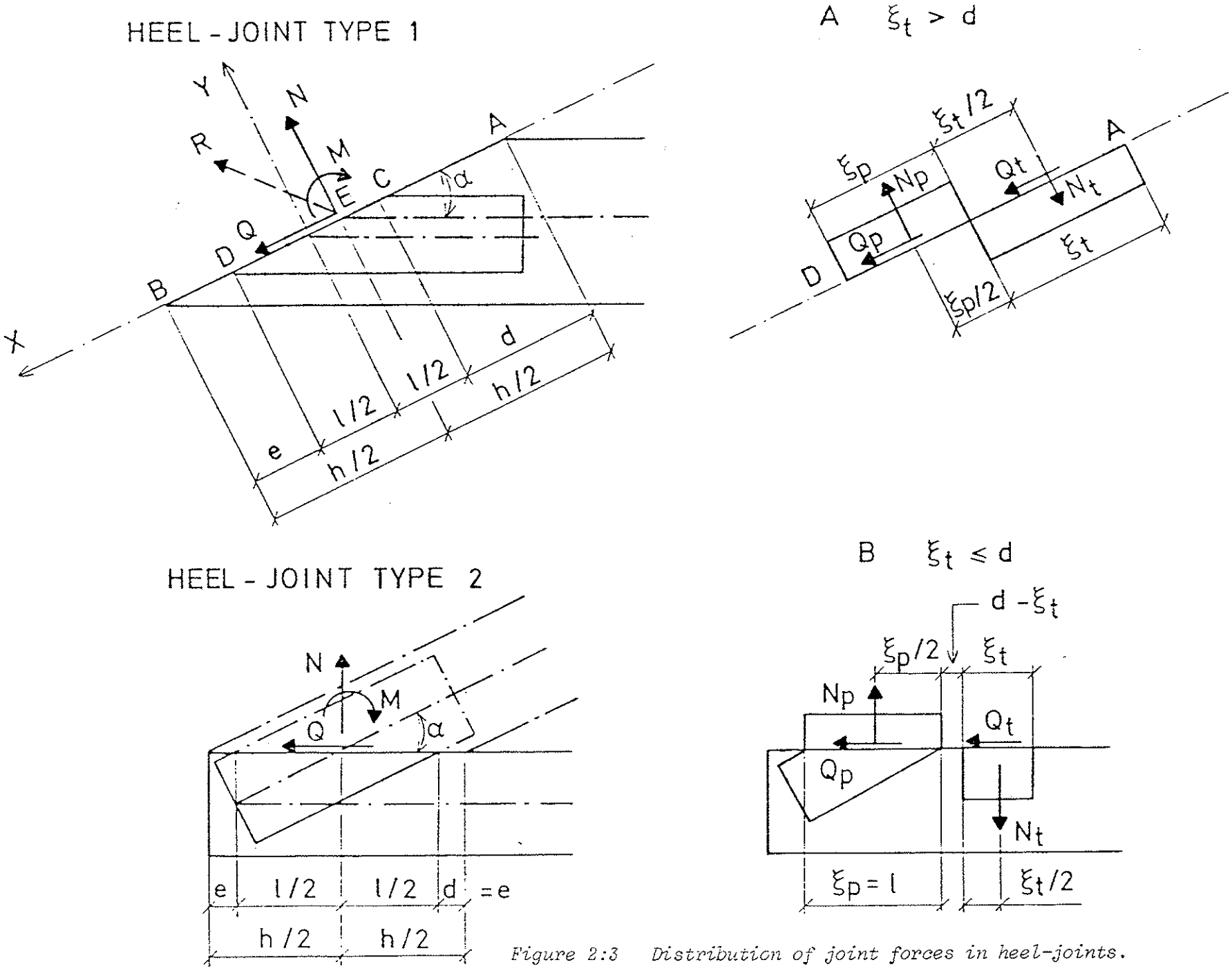

Figure 2:3 Distribution of joint forces in heel-joints.

Case A: Part of the plate utilized ($\xi_p < b$)

Moment on the plate:

$$M_p = 0{,}5(\xi_t - d)N_p \qquad (\xi_t \geq d)$$

which introduced in (3) gives:

$$\xi_t = \frac{2M + eN}{\sigma_c B(b + d) + N} \tag{1:A}$$

Case B: The plate utilized all along the joint ($\xi_p = b$)

$$M_p = 0 \qquad (\xi_t < d)$$

$$\xi_t = b/2 + d - \sqrt{(b/2 + d)^2 - \frac{2M - N(d - e)}{\sigma_c B}} \tag{1:B}$$

The cases A and B coincide when the tt-joint transmits a compression force

$$\sigma_c B d = \frac{2M - N(d - e)}{b + d}$$

The neutral axis and the stress limits then are at the edge of the plates ($\xi_t = d$)

Case C: No contact between the timbers.
The plate is stressed all along the joint (tension and compression)

$$N_p = N_{pt} - N_{pc} = N$$

$$Q_p = Q$$

Moment on the plate: $M_p = M - 0{,}5(d - e)N$

$$\xi_{pt} = (N_{pt}/N)b - 2M/N + d - e$$

$$\xi_{pc} = b - \xi_{pt} = -b\, N_{pc}/N + 2M/N + e - d \tag{1:C}$$

If the stresses p_c (compression) and p_t (tension are introduced, expressed in force per unit length of the cross section of the individual plate:

$$\xi_{pc} = \frac{2M - N(d - e)}{2p_c b + N} \quad \text{and} \quad \xi_{pt} = \frac{2M - N(d - e)}{2p_c b - N}$$

2.2 Design against plate failure

2.2.1 Design stipulations

The capacity of the plates to carry a force F_p and a moment M_p (evenly distributed on two plates) is verified with respect to the strength of the plate itself by the following condition (10):

$$\left(\frac{N_a}{N_{aD}}\right)^2 + \left(\frac{N_b}{N_{bD}}\right)^2 \leq 1 \qquad (10)$$

N_a and N_b are the components of F_p in the principle directions of the plate, see Figure 2.1:

$$N_a = F_p \cos \alpha_2 \qquad (11a)$$

$$N_b = F_p \sin \alpha_2 \qquad (11b)$$

in which $\alpha_2 = \pi/2 - \alpha_F + \beta$
is the angle between F_p and the a-direction.
N_a and N_b may be calculated from the model used in section 2.1.

N_{aD} and N_{bD} denote design values defined in the following section.

2.2.2 Design values for plate strength

As design value N_{aD} in (10) is taken the greatest (favourable) value of

$$N^p_{aD} = 2b_n p_{aD} \text{ and } N^s_{aD} = 2\ a\ s_{aD} \qquad (12a)$$

As design value N_{bD} in (10) is taken the greatest (favourable) value of

$$N^p_{bD} = 2a_n p_{bD} \text{ and } N^s_{bD} = 2b\ s_{bD} \qquad (12b)$$

In (12) p and s denote plate strength (N/mm) in tension (or compression) and in shear for individual plates. The factor 2 corresponds to the (usual) case when there are two opposite plates of equal size. The length of the cross section of the plate along the joint projected on the a-axis of the plate is denoted a and the projection on the b-axis is denoted b. It is assumed that the values a and b are based on effective plate dimensions, that is, actual dimensions must be reduced when the punched nail holes interfere with the plate edges.

The index n on a_n and b_n indicates that the plate is partly stressed. If the model introduced in section 2.1 is used, a_n and b_n are the projections on the principal directions of the plate of the stress distribution length ξ_p:

$$a_n = \xi_p \cos \alpha$$

$$b_n = \xi_p \sin \alpha = a_n \operatorname{tg} \alpha$$

where ξ_p is derived from (5a), (5 T) or (8). For example from (5a)

$$a_n = a - \frac{2M_p \cos \alpha}{F_p \sin \alpha_F} \tag{14a}$$

$$b_n = b - \frac{2M_p \sin \alpha}{F_p \sin \alpha_F} \tag{14b}$$

2.3 Design against grip failure

2.3.1 General method

The area of contact between a plate and the wood member (the plate/timber joint) is effective inside certain narrow zones along the timber edges. The width of the zone is supposed to be given in the plate type approval (generally 5 to 10 mm). By grip area (anchorage area) is here referred to effective area. It is denoted A and is generally a total of two areas from two plates, one on each face of the timber. When the action on the plate at the section over the tt-joint is F_p and M_p (Figure 2:1), the moment in the centre of rotation is

$$M_{RC} = M_p - F_p e_{RC} \tag{15}$$

where e_{RC} is the distance from the force to the centre of the rotation of the plate in relation to the wood member.

The shear stress, generated by the force and the moment, may be assumed to have a constant value over the pt-joint area, corresponding to full plasticity. Hence, if the design value of shear stress is τ_D, the design value of the moment M_{RC} will be

$$M_{RCD} = \tau_D \int^A r_{RC} dA \qquad (16a)$$

The centre of rotation (RC) is established by iteration from the conditions for equilibrium

$$\tau \int^A \sin \phi \, dA = F_p \cos \alpha_F \text{ and } \tau \int^A \cos \phi \, dA = F_p \sin \alpha_F \qquad (16b,c)$$

In (16) the polar coordinates of dA is (ϕ, r) and of RC (0,0).

2.3.2 Design stipulations

The principal condition for design against failure in the plate/timber joints is

$$M_{RC} \leq M_{RCD} \qquad (17)$$

where M_{RC} is the moment applied on the joint in the centre of rotation (15). The design value of M_{RC} is determined from (16a).

The following condition for design is an acceptable approximation:

$$\left(\frac{F_p}{F_{pD}}\right)^2 + \left(\frac{M_{CG}}{M_{CGD}}\right)^2 \leq 1 \qquad (18)$$

Here M_{CG} is the moment applied at centre of gravity of the timber/plate joint

$$M_{CG} = M_p - F_p \, e_{CG} \qquad (19)$$

where e_{CG} is the distance from the force F_p to the centre of gravity. The design values F_{pD} and M_{CGD} are defined by (18)

$$F_{pD} = A \, \tau_D \qquad (20) \quad \text{respectively} \quad M_{CGD} = \tau_D \, A \, d/4 \qquad (21)$$

The design value of the shear stress, $\tau_D(\alpha)$, is given in certification (type-approval of the plate) as a function of the angles between the force, the principal direction of the plate and the fibre direction. In (21) is used $\tau_D = \tau_D(0)$ if not said otherwise in the certificate.

The length d is calculated from

$$Ad/4 = \int^{A} r_{CG}\, dA \tag{22}$$

which can be differentiated by dividing A into a few ΔA concentrated to points. For a trapeziform joint-area, Figure 2:4, $\Delta A = A/2$ can be assumed to be concentrated the distance d/4 from the centre of gravity, that is $Ad/4 = 2(A/2)d/4$ with d calculated from

$$d = 2\sqrt{z_a^2 + z_b^2} \tag{23}$$

$$z_a = \frac{1 + c/a + (c/a)^2}{1 + c/a} \cdot a/3 \tag{24a}$$

$$z_b = \frac{1 + 2c/a}{1 + c/a} \cdot b/3 \tag{24b}$$

In case c = 0 (triangle) $d = \frac{2}{3}\sqrt{a^2 + b^2}$

In case c = a (rectangle) $d = \sqrt{a^2 + b^2}$ i.e. d is the diagonal.

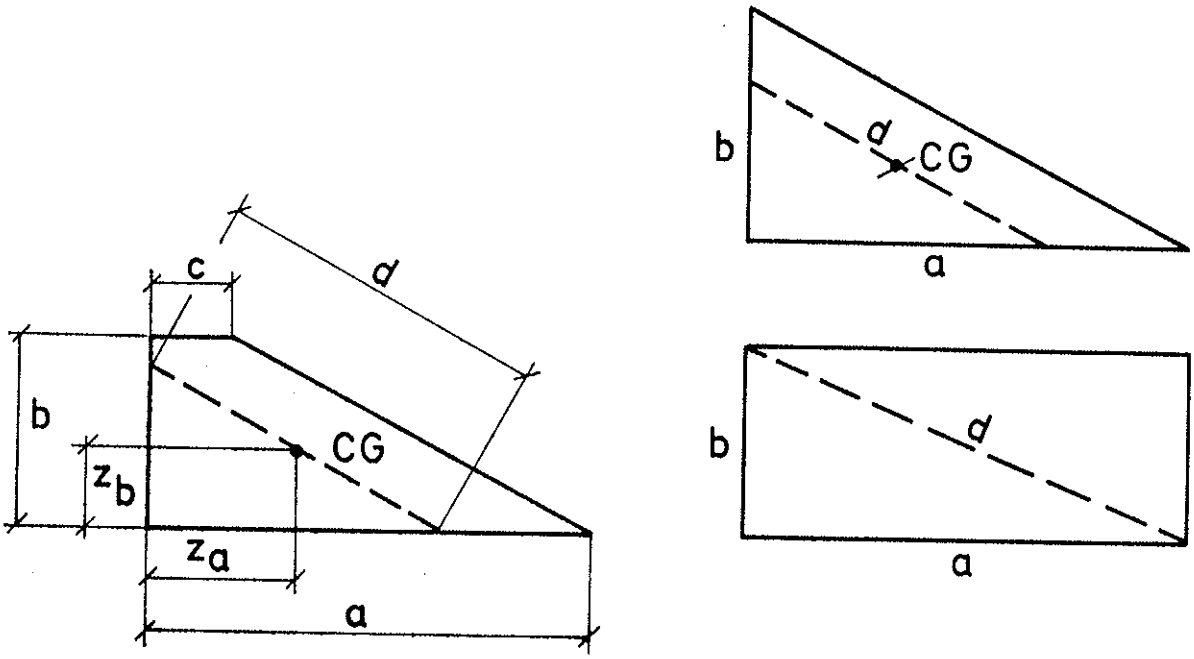

Figure 2:4 Diagonal d in trapezium, triangle and rectangle.

2.4 Design against wood failure

2.4.0 General

It must be verified that stresses (compression, tension, shear) generated in the wood within a connection do not exceed stipulated design values.

$$\sigma \leq \sigma_D \tag{25}$$

The influence on capacity of the angle of stress to the fibre direction (α_1) is presumed to be considered by the value of σ_D.

2.4.1 Compression

The stress at transmission of compression force between connected wood members (N_{tc}) - evenly distributed on timber thickness (B) and stressed part of the joint (ξ_t) - shall be proved not to exceed the design value for compression stress:

$$\sigma_c = \frac{N_{tc}}{B\,\xi_t} \leq \sigma_{cD} \tag{25a}$$

2.4.2 Tension

It must be verified that stresses within the connection generated in the fibre direction of the wood by the forces transmitted through the plates (F_p, M_p), do not exceed stipulated design values at combined tension and bending.

If the cross section area of the wood member is reduced by nails more than 15 %, the reduced area shall be used for the calculation of stress, otherwise the full section area may be used.

If the plate anchorage (effective plate/timber-joint area) penetrates less than 60 % of the width of the timber (H)

$$l_{A90} \leq 0{,}6\ H \tag{26}$$

it must also be verified that a simultaneous tensile force perpendicular to the fibre direction (F_{p90}) does not exceed the design value (F_{p90D}) defined by (27)

$$F_{p90} \leq F_{p90D} = \sigma_{t90D}\ B\left[l_{A0} + 0{,}5(l_1 + l_2)\right] \tag{27}$$

The equivalent length of constant stress, given within the brackets, is calculated as if the plane of failure is "through thickness (B)", parallel to the fibre direction and tangent to the anchorage area, see Figure 2:5. The lengths l_1 and l_2 are measured from the projection (l_{A0}) of the plate anchorage area to the timber end or similar intersection of the mentioned plane, an overruling stipulation beeing that l_1 or l_2 must not be assumed to be longer than four times the plate/timber-joint depth, l_{A90}.

Thus

$$l_1 \leq 4l_{A90} \qquad l_2 \leq 4l_{A90} \tag{28}$$

The definitions of l_{A0}, l_{A90}, l_1 and l_2 are examplified in Figure 2:5. The maximum plate force with respect to the design stress value is also given in the figure.

2.4.3 Shear

Shear stress capacity of the wood members within a connection may be verified by

$$\tau_o \leq \tau_D = \tau_{oD} \left[1 + 2s_D\, r/(\tau_{oD}\, BH)\right] \tag{29}$$

In (29) τ_o (N/mm^2) is a mean value of shear stress parallel to the fibres calculated without regard to the contribution to shear rigidity of the plates and τ_{oD} is the stipulated design value for shear in the wood. The mean value of τ_o is determined over a length equal to the depth of the member (H). s_D (N/mm) is the design value of plate shear stress in that principal direction which is next to the shear direction. r is the part of the shear stress distribution length (H) which is covered by plates. B is the thickness of the timber.

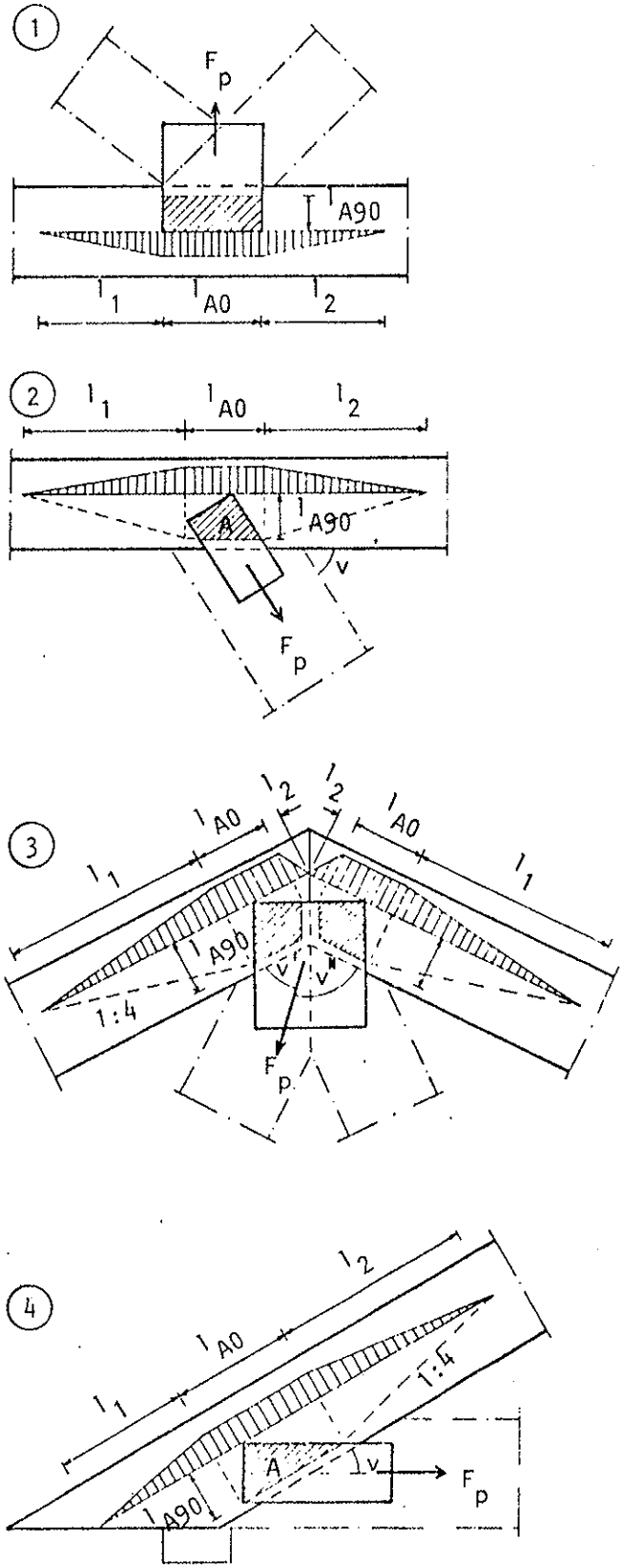

① ② $l_1 = l_2 = 4\ l_{A90}$

① $F_p \leq \sigma_{t90D} B(l_{A0} + 4\ l_{A90})$

② $F_p \sin v \leq \sigma_{t90D} \cdot$

$\cdot\ B(l_{A0} + 4\ l_{A90})$

③ $l_1 = 4\ l_{A90}$

$\frac{F_p}{2} \sin v \leq \sigma_{t90D} \cdot$

$\cdot\ B(l_{A0} + 2\ l_{A90} + 0{,}5\ l_2)$

④ $l_2 = 4\ l_{A90}$

$F_p \sin v \leq \sigma_{t90D} \cdot$

$\cdot\ B(l_{A0} + 2\ l_{A90} + 0{,}5\ l_2)$

Figure 2.5 Fictitious distribution of stresses perpendicular to the fibre direction and corresponding design stipulation.

2.5 Rules for specific joints

2.5.1 Approximations

The model described in section 2.1 is based on the presumption that the cross section through the joint remains plane and on a stress distribution chosen without regard to the deformations. In reality the distribution of forces on the plate and the wood depends on the deformations. This is appreciated if a plate is considered which is cut in strips in the a-direction. The stiffness properties of such a plate will justify an assumption that the plate force F_p occurs in the a-direction, that is like F_p' in Figure 2:6, corresponding to $\alpha_{xF} = \alpha$ in eqs. (1) and (2). The displacement of Fp to F_p' is made possible by the slip in the joint, which generates an additional force F_{pg} in the plate and a contrary force F_{tg} in the timber/timber joint.

The force Fp is adjusted in relation to the anisotropy of rigidity of the plate. One may well assume an equivalent anisotropy of the strength with the result that the adjustment is favourable for the design against failure. A consequent design method would be to try values of α_{xF} in the equations (1) and (2) which correspond to alternative orientation of the plate force F_p, such as in the joint direction ($\alpha_{xF} = 0$) or in the a-direction ($\alpha_{xF} = \alpha$) or along the b-axis ($\alpha_{xF} = \alpha \pm \frac{\pi}{2}$). As a rule it follows from the joint forces and the position of the plates which alternatives are relevant and favourable.

Further simplification which often can be accepted are assumptions that the total length of the plate-section over the joint is utilized ($M_p = 0$) and that the contribution from friction between the members is neglected ($\phi = 0$).

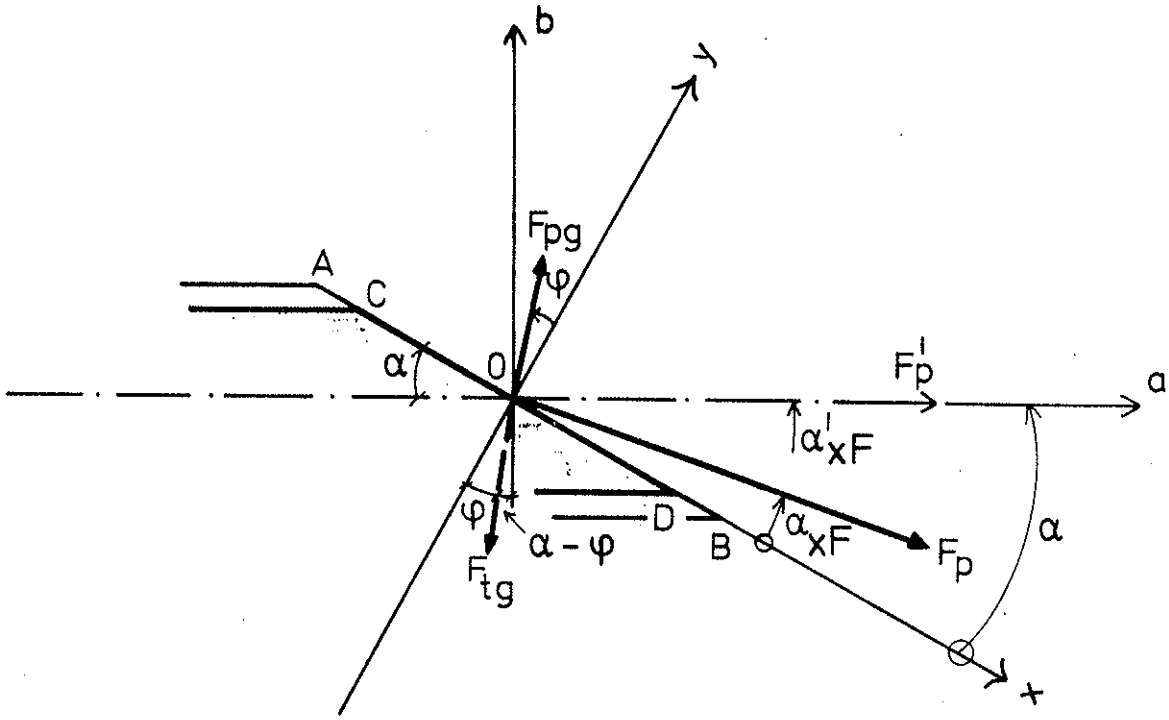

Figure 2.6 *Displacement of plate force (F_p to F_p') due to slip in the joint and generated forces. Friction is indicated by the angle ϕ.*

2.5.2 The heel-joint

The heel-joint in roof-trusses is one important object for application of design rules. There are several suggestions for the calculation and design, see particularly Feldborg & Johansson (1980) and Källsner (1980). The following three examples are quoted from Källsner. They are provided with figures showing the design, a corresponding model, the forces and moment transmitted between members, the distribution of forces on plates (F_p) respectively direct on members (F_t), and the distribution of stresses.

The denotations appear from the figures. Suffix c is used to denote compression, t is for timber, p for plate and D is indicating design value. The forces applied on the joint are either N and Q or V (Vertical) and H (Horisontal), the moment is M. The force F_t is equal to $-F_t$ in the list of symbols. The angle α_F corresponds to α_{xF}. The equations are derived from the equilibrium conditions and, when these are not sufficient, from stress conditions.
A theory of plasticity is applied and it is assumed that the plates themselves do not transmit moment, that is, the stress in the plates in a section over the joint is considered constant. Corresponding conditions as to distribution are adopted for the compression stress between the wood members at contact. Friction between members is not taken in account.

Example E1 (Figure E1)

Equations of equilibrium

$$F_p = \frac{Q}{\cos(\alpha-\alpha_F)} \tag{1:1}$$

$$F_t = Q\ tg(\alpha-\alpha_F) + N \tag{1:2}$$

$$e_t = \frac{M}{F_t} = \frac{M}{Q\ tg(\alpha-\alpha_F) + N} \tag{1:3}$$

Design against plate failure

$$N_a = F_p \cos\alpha_F \tag{1:4}$$

$$N_b = F_p \sin\alpha_F \tag{1:5}$$

Design condition is

$$\left(\frac{F_p}{N_{aD}} \cos\alpha_F\right)^2 + \left(\frac{F_p}{N_{bD}} \sin\alpha_F\right)^2 \leq 1 \tag{1:6}$$

Design against wood failure

$$\sigma_c = \frac{F_t}{2(h_t-e_t)B} \leq f_c \tag{1:7}$$

where σ_c is the stress and f_c is the strength in compression perpendicular to the fibre direction. B denotes the thickness of the wood members.

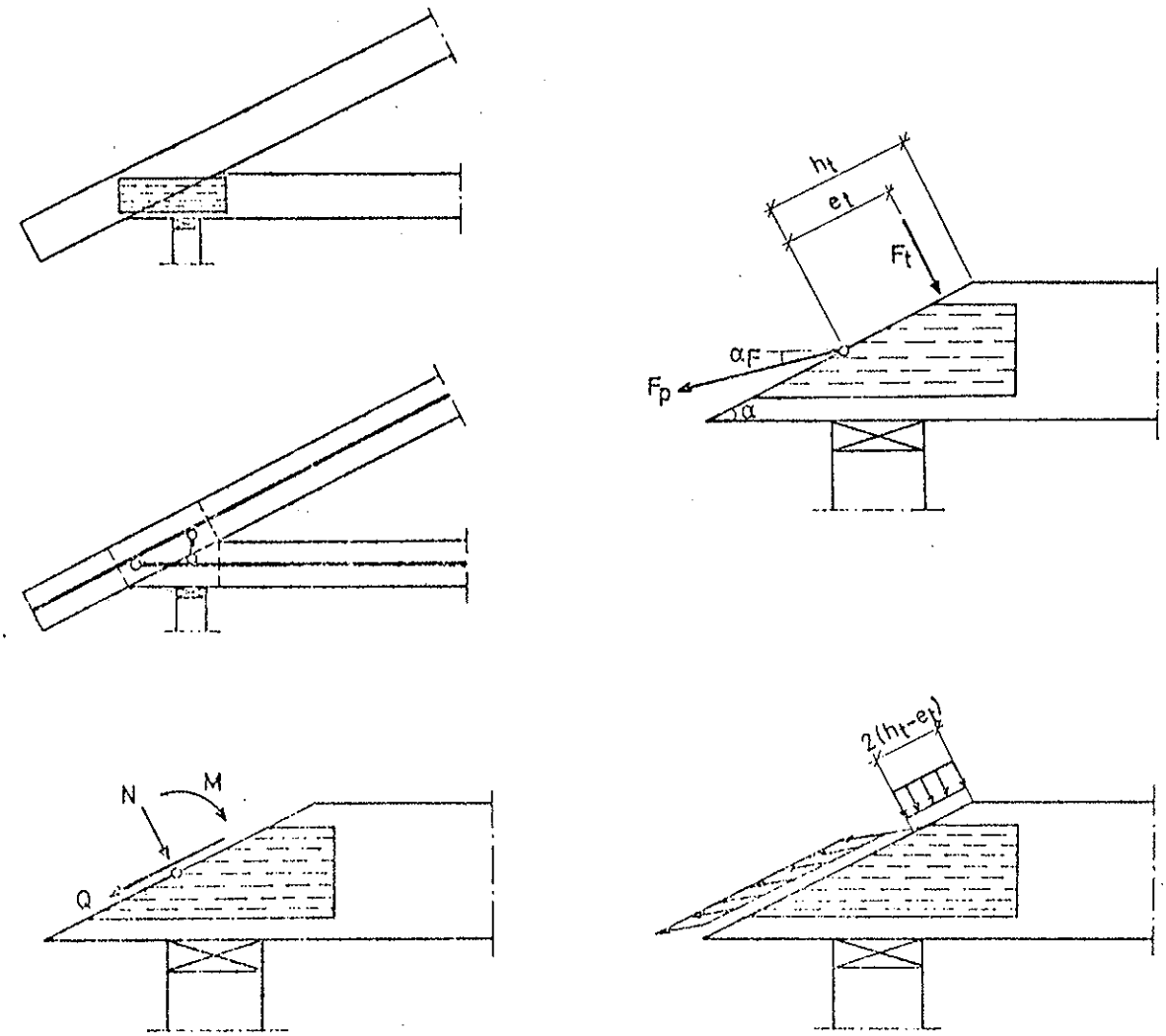

Figure E1

Example E2 (Figure E2)

Equilibrium equations

$$F_{p1} = \frac{H}{\cos\alpha_F} \tag{2:1}$$

$$F_v = V - H\mathrm{tg}\alpha_F \tag{2:2}$$

$$F_t = F_v\cos\alpha = (V - H\mathrm{tg}\alpha_F)\ \cos\alpha \tag{2:3}$$

$$F_{p2} = F_v\ \sin\alpha = (V - H\mathrm{tg}\alpha_F)\ \sin\alpha \tag{2:4}$$

$$e = \frac{M}{F_t} = \frac{M}{(V - H\mathrm{tg}\alpha_F)\ \cos\alpha} \tag{2:5}$$

Design against plate failure

The components of the force F_{p1} on the first plate are

$$N_a = H \tag{2:6}$$

$$N_b = H\ \mathrm{tg}\ \alpha_F \tag{2:7}$$

The design condition is

$$\left(\frac{H}{N_{aD}}\right)^2 + \left(\frac{H\mathrm{tg}\alpha_F}{N_{bD}}\right)^2 \leq 1 \tag{2:8}$$

The force on the second plate is

$$N_b = (V - H\mathrm{tg}\ \alpha_F)\ \sin\alpha \tag{2:9}$$

Design condition is

$$\frac{(V - Htg\alpha_F)\sin\alpha}{N_{bD}} \leq 1 \qquad (2:10)$$

Design against wood failure

$$\sigma_c = \frac{(V - Htg\alpha_F)}{2(h_t - e_t)\cos\alpha\, B} \leq f_c \qquad (2:11)$$

where σ_c is the compression stress between the wedge and the bottom chord.

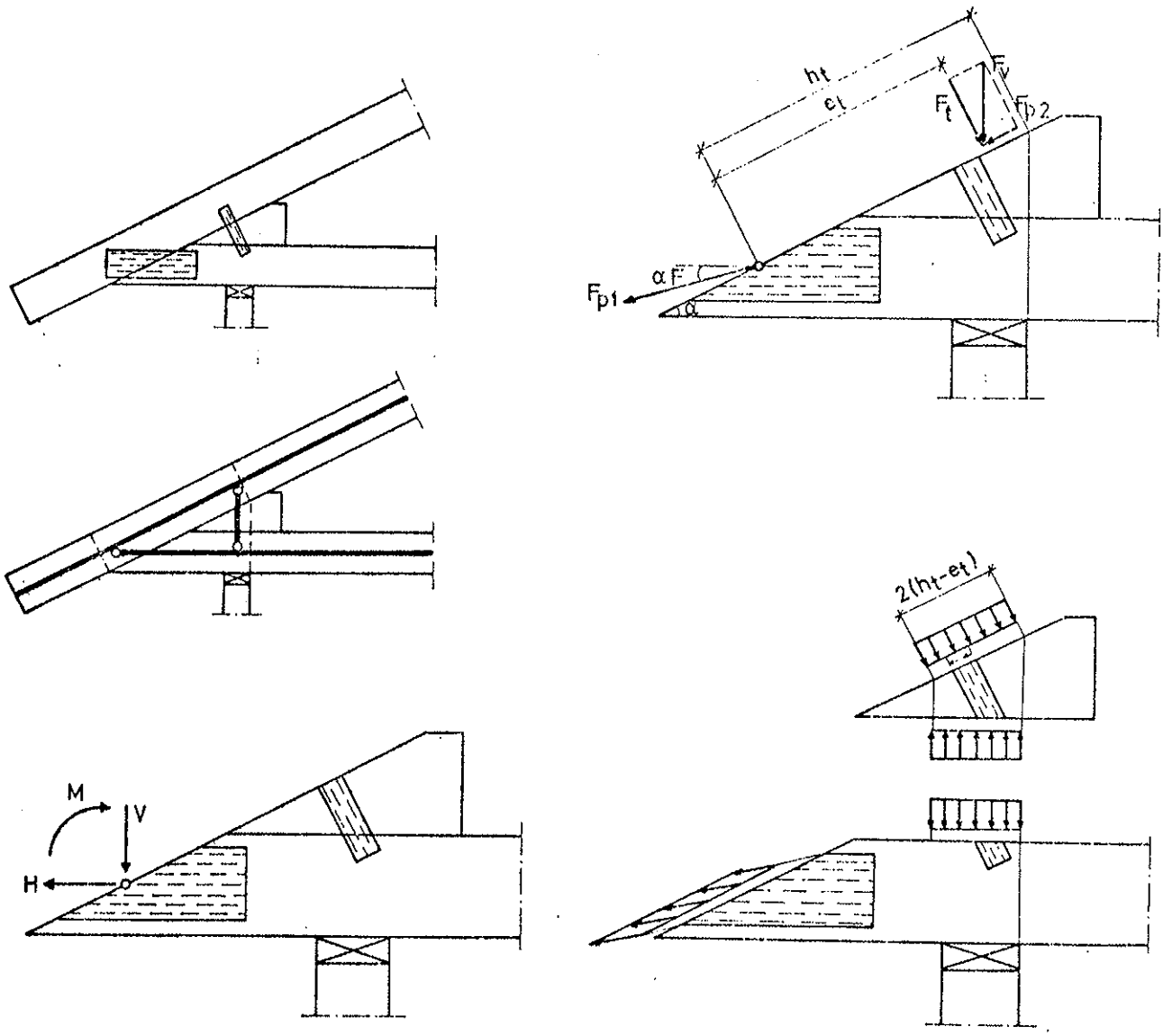

Figure E2

Example E3 (Figure E3)

Equilibrium equations

$$F_{p1} = H \tag{3:1}$$

$$F_{t1} + F_v = V \tag{3:2}$$

$$F_{t1}\, e_{t1} + F_v\, e_v = M \tag{3:3}$$

If the compression strength of the wood is utilized:

$$F_{t1} = 2(h_{t1} - e_{t1})\, Bf_c \tag{3:4}$$

$$F_v = 2(h_v - e_v)\, Bf_c \tag{3:5}$$

The vertical force F_v is divided into the components F_{t2} and F_{p2}

$$F_{t2} = F_v \cos\alpha \tag{3:6}$$

$$F_{p2} = F_v \sin\alpha \tag{3:7}$$

The unknown quantities in (3:2) are eliminated successively

$$e_v = \frac{1}{4}\left(h_{t1} + 3\,h_v - \frac{V}{Bf_c}\right) + \sqrt{\frac{1}{16}\left(h_{t1}+3h_v - \frac{V}{Bf_c}\right)^2 - \frac{4}{4Bf_c} - \frac{1}{2}\left(h_v - \frac{V}{2Bf_c}\right)\left(h_{t1}+h_v - \frac{V}{2Bf_c}\right)} \tag{3:8}$$

The force in the second plate F_{p2} is obtained if e_v is inserted in (3:5) and (3:7).

Further simplification

If it is assumed that the force F_{t1}, defined in Figure 4, does not contribute to the moment stabilizing the rafter ($e_{t1} = 0$), the eqs. (7.38)-(7.44) are replaced by

$$F_{p1} = H \tag{3:9}$$

$$F_{t1} + F_v = V \tag{3:10}$$

$$F_v\, e_v = M \tag{3:11}$$

$$F_v = 2\,(h_v - e_v)\, Bf_c \tag{3:12}$$

$$F_{t2} = F_v \cos\alpha \tag{3:13}$$

$$F_{p2} = F_v \sin\alpha \tag{3:14}$$

Inserting (3:12) in (3:11) gives

$$e_v = \frac{h_v}{2} + \sqrt{\frac{h_v^2}{4} - \frac{M}{2Bf_c}} \tag{3:15}$$

2.5.3 References

/1/ Feldborg, T and Johansen, M — Wood Trussed Rafter Design. Danish Building Research (SBI). Report No. (1980). Not yet published.

/2/ Källsner, B — Design of Joints with Nail Plates - The Heel Joint. CIB-W18/13-7-5. Otaniemi June 1980.

/3/ Källsner, B — Inverkan av indragna upplag på utformning och dimensionering av W- och WW-takstolar med spikplåtsförband. (Influence of support eccentricity on the design of W- and WW-trusses with nail plate connectors). Swedish Forest Products Research Laboratory (STFI). Series A No. 1980. Not yet published.

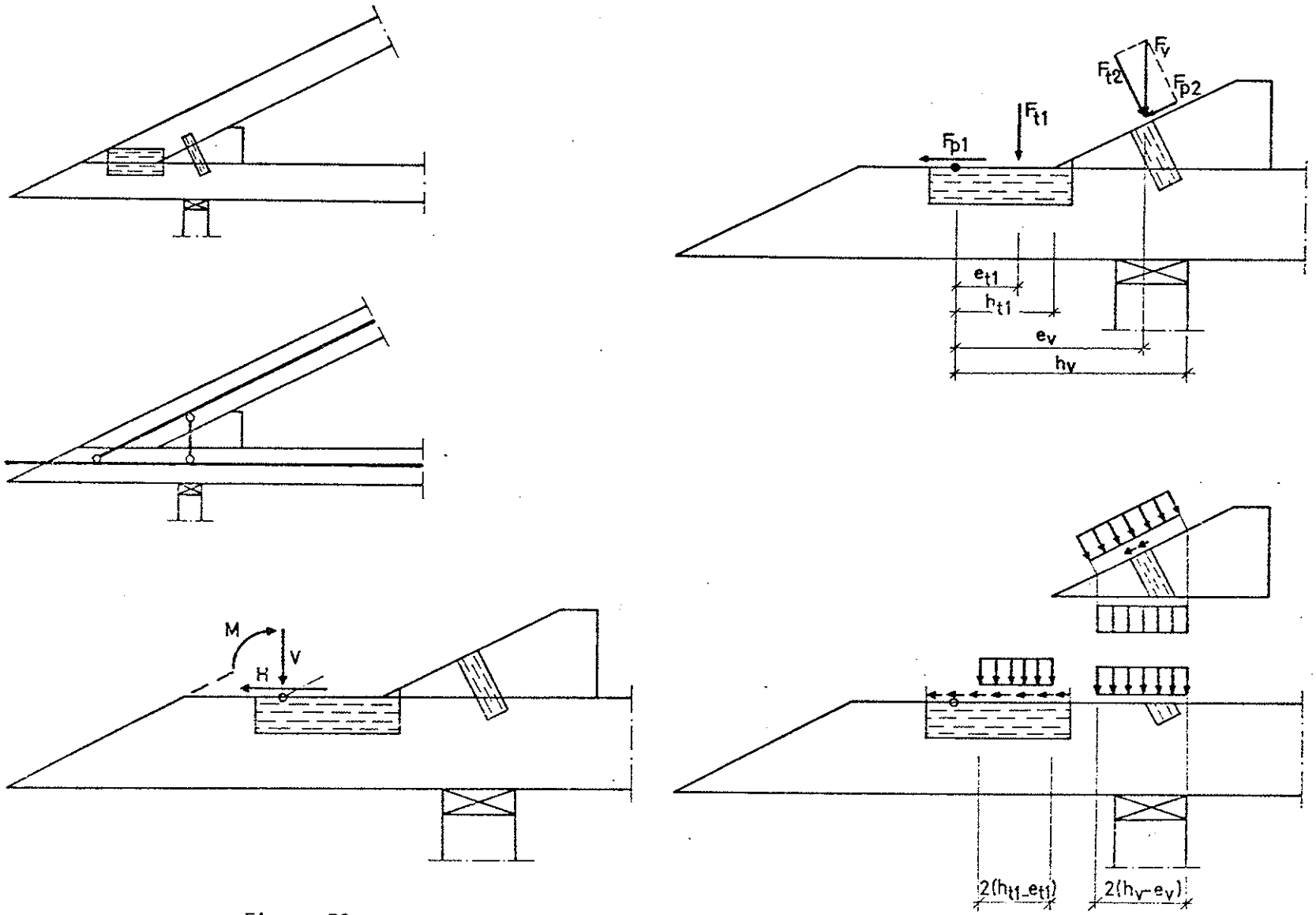

Figure E3

2.6 Calculation of slip

2.61 Model

The slip between two jointed members (1 and 2) due to the force and moment transmitted is of two kinds: translation (δ) and rotation (θ). It is composed of the slip in the plate/timber joints (y_1 respectively y_2) and deformation in the plates between the grip areas and in the wood at contact between the members. The mentioned components of slip may be given separately or integrated into one value of total slip or correspondent slip modulus.

For calculation of slip in the servicability limit state the slip may generally be considered proportional to the force (moment), that is, a constant value of slip modulus is applied. The slip is modified with respect to combined action of force and moment.

2.62 Translation

The modulus for translation slip between the plate and the timber is defined by:

$$k = \tau/y \qquad (N/mm^3) \tag{30}$$

where $\tau = F/A$ is the shear stress in the anchorage area (p/t-joint). The corresponding contribution to the mutual displacement between two jointed wood members (1 and 2) is

$$\delta = \tau_1/k_1 + \tau_2/k_2 \tag{31}$$

Here $\tau_1 = F/A_1$ and $\tau_2 = F/A_2$ denote the shear stress in the plate (plates) and the respective wood members jointed. A (A_1, A_2) is the total effective area of the plate/timber joint or joints available for transmitting the force from the plates to wood.

The values of the moduli k_1 and k_2 are dependent on the angles between the directions of the force and the principle directions of the wood and the plates. However, in many cases it will give sufficiently accurate result if the approximation $k_1 = k_2 = k$ is introduced also when the connection is not symmetrical with respect to the (timber/ /timber-) joint. In the symmetrical case when $A_1 = A_2 = A$ and $\tau_1 = \tau_2 = \tau$ the mutual displacement of the members is

$$\delta = \frac{\tau}{k/2} = \frac{F/A}{k/2} \qquad (32)$$

Examples of displacement (translation and rotation) between jointed timbers are found in 2.65, Table 2.61.

2.63 Rotation

The modulus for rotation slip (θ) in the plate/timber joint is defined by

$$k_M = \tau_M/y = \frac{M/I_p}{y/r} = \frac{M}{\phi I_p} \qquad (N/mm^3) \qquad (33)$$

In (33) y denotes the tangential slip plate to wood at the distance r from the rotation centre (RC). I_p is the polar moment of inertia with respect to RC calculated from the total effective area of the (two) plate/timber joints available for transmitting the moment M.

The mutual rotation between two jointed wood members, when the deformation of the plates themselves is neglected, is the difference between the rotations of the respective members to the plate (plates):

$$\theta = \phi_1 - \phi_2 = \left(\frac{M}{k_M I_p}\right)_1 - \left(\frac{M}{k_M I_p}\right)_2 \qquad (34)$$

The moments (M_1 and M_2) in (34) may be defined <u>either</u> as moment (M_{CG}) in the centre of gravity of the grip area (plate/timber joint area) <u>or</u> as the moment (M_{RC}) in the centre of rotation. The distance between these two centres, CG and RC, depends on the relative dimensions of the force and the moment transmitted in the joint and their distribution on the plates respectively directly between the members.

The modulus k_M may be used to some degree to compensate the approximation introduced by adopting CG as RC.

The value of the modulus for rotation, k_M, should be specified in the type approval of the plate. Examples of values for rotation and moduli are found in 2.65, Table 2.61.

2.64 Translation and rotation

When there is simultaneous action by a force and a moment in the point of the plate/timber joint to which the I_p in (33) is referred (for example the centre of gravity), the translation may still be calculated from 2.62, while the rotation ϕ_M calculated from 2.63 is modified by

$$\phi_{M,F} = \phi_M \ (1 + \gamma \ F/F_D) \qquad (35)$$

The value of the factor γ is given with respect to the type of plate and joint.

2.65 Symmetrical joints for splicing

2.65.1 General

There are different proposals for application of (33) and (34) in 2.63, particularly when the angle generated by load is calculated for splices in beams or in the rafters and bottom chord of roof trusses. Such splices are in most cases of symmetrical design, Figure 2:7, and may be assumed symmetricaly loaded, that is, the contribution to the rotation by the shear force is neglected.

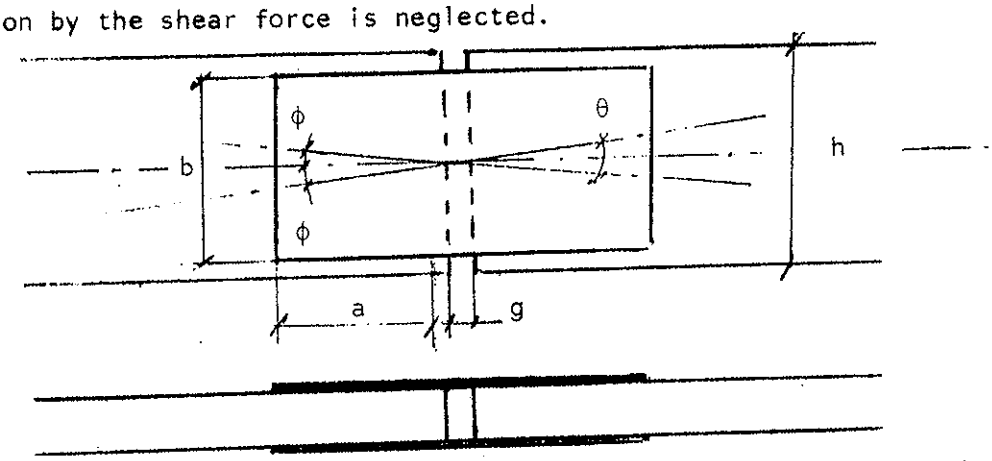

Figure 2:7 Symmetrical splicing with nail plates.

The moment M and the axial force N generate an angle between the connected timber parts ·

$$\theta_{M,N} = \theta_g + \theta_M \ (1 + \gamma N/N_D) \tag{36}$$

Here θ_g is represents the part of the rotation generated when there is still a clearance between the parts, that is when the total load on the joint is carried by the plates. This part may be neglected when the joint is performed without gap or it may be included in the second term. N_D is the design value of the force N which appears along the centre line.

θ_M is the angle when N = 0 expressed by (33) which in this case (Figure 2:7) can be transformed to

$$\theta_M = 2\phi = \frac{M/A}{k_M/2} \cdot \frac{12}{d^2} \tag{37}$$

In (37) A = 2ab denotes the total of the two grip areas at each side of the joint and $d = \sqrt{a^2 + b^2}$ is the diagonal of the individual area.

2.65.2 Approximations

The distance between the endsurfaces of the jointed timbers (δ_θ), to be compensated by the rotation θ, can be regarded as a total of the initial gap (g), a gap (positive or negative) generated by the normal force in the plates ($\delta_{N_p} = \delta_{N,M}$) and a "gap" which is equivalent to the compression of the wood (δ_c):

$$\delta_\theta = g + \delta_{N,M} + \delta_c \tag{38}$$

$$\theta = \frac{\delta_\theta}{h/2} \tag{39}$$

The following approximation can be used for $\delta_{N,M}$ at the serviceability limit state /4/ :

$$\delta_{N.M} = \left(N + \frac{M - M_D}{h/2}\right) \frac{2}{kA} \tag{40}$$

M_D is the design value of the moment (N = 0). The values M_D = 0.5 M and δ_c = 0.3 mm have been proposed as approximations /4/.

The method should be applicable for joints with a gap $g \leq 0{,}5$ mm.

An alternative method is examplified by the expressions in Table 2.61. It is based on (34) and a rotation by moment, expressed in the form

$$\theta_M = C \frac{h(h_g - h)}{3A} \cdot \frac{M}{M_D} \qquad (41)$$

It has been proposed /2/ that the ratio of the design values for moment and axial force in these joints (Figure 2:7) is approximated to $M_D/N_D = h/6$ in which case (41) can be transformed into

$$\theta_M = \frac{C}{N_D} (h_g - h) \; M/A \qquad (42)$$

The value of C/N_D is dependent on the type of plate used. The value of the h_g in the term $(h_g - h)$, which refers to a depth effect, has to be determined by experiment, cf. /2/.

Table 2.61 Translation δ and rotation θ in a symmetrical joint, Figure 2:7 ($y = \delta/2$ and $\phi = \theta/2$ between plates and respective timber).
The values refer to short term loading by a force N_a ($1.5\ N_a$) respectively a moment M_a ($1.5\ M_a$) transmitted in the joint. The value of N_a (M_a) is assumed to be 0.4 times the capacity (5-percentile strength). For long term loading, multiply the slip by a factor 2. The values are applicable for Gang-Nail gage 18, Hydro-Nail E, Structo-Nail T, Träförband T150 and other plates of similar type, and when the timber depth is limited to $125 \leq h \leq 225$ mm.

Level of force [1]	Extension δ mm	Slip modulus k/2 N/mm^3
N_a	0,27	5,0
1,5 N_a	0,54	3,75
Level of moment	Mutual rotation θ at zero gap	Rotation modulus $k_M/2$ N/mm^3
M_a	(13-0,04 h) 10^{-5} M/A	
1,5 M_a	1,4(13-0-04 h) 10^{-5} M/A	
Level of moment	Mutual rotation θ at 1,5 mm gap	
M_a	(26-0,04 h) 10^{-5} M/A or 18 · 10^{-5} M/A	5 500 · $12/d^2$
1,5 M_a	25 · 10^{-5} M/A	4 000 · $12/d^2$

[1] $N_a = N_{adm}$ and $M_a = M_{adm}$ are design values about 0.4 times the 5-percentile strength in short-term testing.

2.65.3 References

/1/ Nordiska riktlinjer för träkonstruktioner, NKB-skrift Nr 13, Nov. 1970 (Nordic Recommendations for Structural Timber, NKB publication series, No. 13).

/2/ Edlund, G: Längdskarvning av träbalkar med spikplåtsförband. Byggforskningen Rapport R40:1971 (Longitudinal jointing of timber joists using nail plate connectors. National Swedish Building Research Report R40:1971).

/3/ Godkännanderegler nr 4 Spikplåtsförband (Rules for general approvals No. 4 Truss plate joints) Statens planverk 1974.

/4/ Feldborg, T & Johanson, M: Wood Trussed Rafter Design. SBI-report. Draft Feb-April 1980. Danish Building Research, Hørsholm.

CIB-W18/14-7-2

INTERNATIONAL COUNCIL FOR BUILDING RESEARCH STUDIES AND DOCUMENTATION

WORKING COMMISSION W18 - TIMBER STRUCTURES

METHOD OF TESTING NAILS IN WOOD
(second draft, August 1980)

by

B Noren

Swedish Forest Products Research Laboratory
SWEDEN

WARSAW, POLAND
MAY 1981

METHOD OF TESTING NAILS IN WOOD

0 Introduction

In the CIB Timber Code is, for determining of characteristic load-carrying capacities, referred to "tests carried out in conformity with ISO/TC 165: Timber Structures - Joints". The preliminary draft of the standard (ISO/TC 165 N 13E 1977-06-20) gives some general principles based on CIB-RILEM Timber Standard No. 6 Test of Mechanical Fasteners - Test Method for Short-term Testing /1/. However, in CIB-RILEM Timber Standard No. 07 Testing of Mechanical Fasteners - Requirements of the Timber and Calculation of Characteristical Values certain "sub-standards" are anticipated, dealing more in detail with the testing of specified fasteners, e.g. nails, staples and nail-plates.

The draft for a Nordic Code and Standard, written by the NKB/INSTA Committee, is disposed in a similar way.

The following recommendation for testing nails is sent out for comments by the Nordic organization NORDTEST. It was written by Bengt Norén, STFI, in consultation with Nils Ivar Bovim, NTI, and Marius Johansen, SBI.

1 Content

This standard is a method of determining the capacity of nails in joints and fastenings of wood and wood-based panels. It partly deals with testing methods for determining of basic data: withdrawal strength, embedding strength and modulus at lateral loading, and bending strength of nails, and partly with testing of strength and stiffness of nail joints.

2 Application

The standard is applicable for determining the capacity in joints of nails or similar fasteners exposed to forces which tend either to separate jointed members or to make them slip against each other. Nails with their length direction perpendicular to the joint between the members will, thus, be exposed to either an axial (withdrawing) force or to lateral force.

In its general parts, the standard is applicable for testing nail capacity in wood of various species and in other wood-based materials at different climate conditions as well as for joints between wood and other structural material such as steel. Values and methods, specified as normal, are applicable to conifer species (e.g. Baltic spruce and pine) and to the CIB Timber Code and Standards. Thus, the values and methods quoted as "normal" are used for deriving characteristic values of strength and stiffness to be applied in climate class 1 according to the CIB Code.

3 References

/1/ CIB/RILEM Timber Standard No. 06 (Testing methods for joints with mechanical fasteners in load-bearing timber structures. Joint committee RILEM/CIB-3TT Final recommendation. Matériaux at Constructions Vol. 12 No. 70).

/2/ CIB/RILEM Timber Standard No. 07 (Draft No. 2 76.08.31)

/3/ CIB Structural Timber Design Code. Fourth Draft, June 1979

/4/ Nordic Guidelines for Timber Structures 4. NKB Report No. 33, May 1978.

4 Denotations

ω	Moisture content
ρ	Density, kg/m^3
d	Diameter, mm
EI	Bending stiffness, N mm^2
l	Span, mm
r	Radius, mm
$\dot{y}$	Rate of deformation, mm/min
P	Load, N
F_{est}	Estimated load-carrying capacity
k	(suffix) Characteristic value

5 Material

5.1 Wood

The density and moisture content of the wood when manufacturing the specimens (joints) should be in accordance with specification. If no specification is given, the wood should correspond with CIB Timber Standard No. 07, Method 2 /2/.

5.2 Nails

The standard deviation of dimensions (diameter and length) and material strength of a sample of nails treated as a uniform group in testing and deriving results should not exceed 0.10 times the mean value.

6 Conditioning of test specimens

Moisture conditions of the wood at nailing and testing are defined by moisture content (MC) or conditioning climate expressed in relative humidity (RH) and temperature (T). If the moisture content within the specimen deviates more than 10 % from the mean value, the lowest MC-value is used for verification, otherwise the mean value may be used.

The standard identifies three levels of moisture content in wood used for the specimens

0.12 ± 0.015	0.16 ± 0.02	≥ 0.30

The standard simultaneously identifies three levels of conditioning climate

Temperature, °C	20 ± 3	20 ± 3	-
RH	0.65 ± 0.05	0.80 ± 0.05	Sub-water

Conditioning time may be regarded sufficient when verified by measurement that the moisture content will be within the identified levels at nailing respectively testing (or within correspondent levels for wood-based material with equilibrium MC deviating from that of wood).

Three combinations of climate at testing - constant RH 0.65 resp. 0.80 and decreasing RH from 0.80 to 0.65 between nailing and testing - are recommended in Table 6.1 when values for the structural timber code shall be based on the testing results. When testing for unprotected exterior or sub-water conditions the testing and possibly the nailing should take place in wood (or wood-based material) which has been soaked by water until fibre saturation.

Table 6.1 Relative humidity (RH) at nailing and testing corresponding with structural climate classes in the timber code /3/. Temperature 20 ± 3 °C.

Type of test	Relative humidity for climate class	
	1 Nailing/Testing	2 Nailing/Testing
Withdrawal	0.65/0.65 0.80/0.65	0.80/0.80
Joints	0.65/0.65	0.80/0.80

7 Withdrawal testing

The rules specified in the following apply when the withdrawal capacity (axial force capacity) of single nails is determined. They also apply for tests to determine pulling-through capacity of nail heads.

7.1 Test specimens

The dimensions of the wood appear from the stipulated distance between nails and between nails and wood edges. Normal centre distance between nails and normal distance from nail to edge, respectively, should be 10 d in the fibre direction and 5 d perpendicular to the fibre direction, whereby d denotes the diameter of the nail.

The nails should be driven perpendicular to that wood surface against which the reaction forces (compression) will be applied at testing. The nails are normally driven without preboring and normally not longer than that the nail point remains in the wood.
The effective holding length in the wood is then defined as the total length in the wood, reduced by the length of the nail point. When nails driven through the specimen are tested, the effective length is equal to the specimen thickness.

Nails that are threaded or treated in other ways for better withdrawal capacity shall normally be driven thus deep that the above defined effective anchoring length will be equally long as the threaded part. Other types of nails shall normally be driven to a depth of at least 0.7 times the total length of the nail.

If not otherwise specified, the moisture content of the wood in driving the nails should be equal to the equilibrium moisture content at 80 percent relative humidity and 20° C temperature, compare section 6.

7.2 Testing performance

7.2.1 Equipment

The testing machine should allow a constant rate of deformation. The grips shall be pinned thus that the resulting force coincides with the axis of the nail.

Supports (reactions) must not stress the wood closer to the centre of the nail than 6 d in the fibre direction and 3 d perpendicular to the fibre direction.

7.2.2 Loading

The nails shall not be loaded until 24 h after nailing. The loading rate should be thus that the rate of withdrawal is 2.5 mm/minute ± 25 %. The testing is interrupted when maximum load is reached, however, not until the withdrawal is equal to the diameter of the nail (d). If several cycles of load to a certain level are prescribed, the mentioned rate of withdrawal shall apply for each cycle.

Note. The loading procedure is simplified compared with what is said in /1/. The total testing time is thereby shortened. The rate of withdrawal is in accordance with ASTM D 1761-74.

7.2.3 Measuring the slip of the nail

The slip of the nail at increased load is preferably recorded continuously.

7.2.4 Report

In addition to what is prescribed in section 11, the testing report shall include the following data:

a) The angle between the axial direction of the nail and the tangential direction of the annual rings, and the angle between the nail direction and the fibre direction.

b) Geometry and surface treatment of the nail. Regular geometry is described by measures, figure 7.1, irregular geometry, e.g. as a result of zinc coating, can be shown by enlarged photographies.

c) The method of driving the nails (hammering, pneumatic driving, pressing in a testing machine, etc.), possible preboring, splitting at driving.

d) Maximum load, load/withdrawal curve.

8 Embedding testing

The following specific rules apply at testing of the strength of wood at compression from a nail perpendicular to the nail axis (embedding strength).

8.1 Test specimens

The test specimens are made as symmetrical three member joints with the tested wood as centre member and with side members of steel, see figure 8.1. The wood member thickness shall be 3.5 d to 4 d, the length of the wood member in the fibre direction being at least 24 d and with a width (perpendicular to the fibre direction) of at least 12 d. The nail for the testing shall be driven into the middle of the wood member (end distance at least 10 d, edge distance at least 5 d) and perpendicular to the face of the wood. Guiding of the nail at driving is needed except when preboring is prescribed. The nail shall pass through prebored holes in the steel members with the diameter carefully adapted to the diameter of the nail. Bushings may very well be used.

Note 1. The purpose of limiting the wood member thickness and of jamming the nail thight in the side members is to achieve an evenly distributed compression of the wood along the nail. At testing embedding strength in wood-based panels, the panel is used as main member with its original thickness. Thus, the possibility of determining embedding strength under a nail with a small diameter might be limited.

Note 2. The embedding strength can alternatively be tested using several nails simultaneously (testing a group of nails). In this case, the length and width of the wood member is increased thus that the distance between nails is at least 10 d and 5 d, respectively parallel and perpendicular to the fibre direction. The stipulated minimum distance to ends and edges of the wood are not changed.

8.2 Testing performance

8.2.1 Equipment

The side members of steel shall be clamped parallel, with a clearance just allowing the main member (test specimen) to be displaced without friction. It is recommendable to make the side members part of a jig with interchangeable bushings fitting nails of different diameters. A jig, adjustable to the thickness of the wood specimen and convenient for replacing of specimens, is shown in figure 8.1.

8.2.2 Loading

When the wood member is loaded by compression force applied to an end surface, the load is transformed to the side members through compression under the nail in the fibre direction. If the wood member is rotated 90 degrees and loaded through the edge side, the wood is stressed in compression under the nail perpendicular to the fibre direction. Compression stress in other angles to the fibre direction may be obtained by using a wood specimen cut out with the edges in an angle to the fibre direction. Testing of embedding strength for wood-based panels in different directions is performed correspondingly. The load is applied in such a way that the rate of slip between wood member and the side members is held constant during the testing at the value of 1 to 1.25 mm per minute.

The testing is interrupted when maximum load is reached, however, not until the slip (indentation of nail) is equal to the nail diameter but at least 3 mm.

Note 3. The translation of the nail in the wood is equal to the slip of the wood member relatively to the side members. This slip may as a rule with sufficient accuracy be taken as the movement of the loading head of the machine, with or without correction for irrelevant deformations in the specimen and loading device.

Measuring of nail translation

Nail translation (indentation) in the wood is given by the displacement of the wood member relatively to the side members. This slip can be measured either with gauges applied between the wood member and side members or from the movement of the loading head after correction for irrelevant compression.

8.2.4 Report

Additional to what is stipulated in section 11, a testing report shall include data on:

a) Angle between the direction of the force and the fibre direction (or equivalent principal direction in wood based material) respectively the tangential direction of the annual rings.

b) The orientation of the nail cross-section to the force direction.

c) At preboring, diameter of prebored holes (or of the drill used).

d) Maximum load and load at an indentation (slip) equal to the nail diameter or - if d < 3 mm - equal to 3 mm. Preferably, a load/embedding curve (always at determining of embedding moduli).

9 Testing of nails in bending

The following specific rules apply at testing of the bending strength of nails.

9.1 Testing performance

The nail is laid on two supports with a span (l) about 10 d (see note) and loaded by a force (P) in the middle of the span, see figure 9.1. Hereby d denotes the diameter (depth) of the nail. The supporting and loading surfaces shall be cylindric with a radius (r) about 2 d (see note).

The rate of loading shall be such that the rate of the deflexion at the load does not exceed 1.0 d per minute (see note). The highest load at that rate of deflexion or at the deflexion 2 d is defined as maximum load (ultimate load).

Note. As value of d is normally used the nominal diameter of the nail. If the bending resistance is significiently dependent on the geometry of the nail, it may alternatively be used a value $d\ (mm) = 0.1\sqrt[4]{EI}$ where EI ($N\ mm^2$) is the bending stiffness of the nail in the tested bending direction.

For span (l), radius (r) and rate of deflexion ($\dot{y}$), the values given in table 9.1 are accepted.

Table 9.1

d mm	l mm	r mm	$\dot{y}$ mm/min
2 - 3	25	6	3
3.1 - 4.4	38	6	5
4.5 - 6	50	12	6
6.1 - 8	75	12	8

9.2 Report

Additional to what is stipulated in section 11, the testing report should include the following data:

a) The orientation of nail cross-section to the direction of the force.

b) Dimensions and rate of deflextion, see figure and table 9.1.

c) Load/deflexion curves until a deflexion of at least 2 d.

10 Testing of laterally loaded nails in joints

10.0 Introduction

Nail joints appear in a large number of variations with respect to the number of jointed members and angles between these, member dimensions, number and location of nails, type of jointed material, etc. This limits the possibility of a testing standard more specified then the general standard for testing of mechanical joints /1/, /2/. The rules to follow refer to testing the capacity of the nails to transform lateral force in joints wood/wood or joints wood/wood-based panels or joints wood/steel (or similar material). The rules are applicable to joints exposed to forces that cause displacement (slip) between the members without separating them. Only connections with two symmetrical joints viz. three-member joints are dealt with. They can be used for testing nails active in one section as well as active in two sections. The rules apply when the members are stressed in tension or compression - "testing in tension" (T) or "testing in compression" (C), compare figure 10.1. Testing of joints for determining of moment capacity is not dealt with in this standard.

10.1 Joints wood/wood

The test specimens are made as symmetrical three-member joints. This means that two similar side members are jointed to a main member and that the location of the nails is symmetrical to the centre of the joint.

The wood members shall be planed after conditioning in a climate equivalent to what is stipulated for the subsequent nailing, cf. table 6.1. They should, further, be stored in the same climate until nailing.

The thickness of the wood members depends on the purpose of the testing. Normally two cases apply:

A Thickness 10 d for side members as well as for main member.*
B Thickness 5 d for side members as well as for main member.

The width and length of the members (joint size) is chosen depending on number of nails and their stipulated location. The normal case (four nails to each of the two joints) prescribes a joint size of at least 20 d x 30 d or 25 d x 25 d, respectively, see figure 10.1.

When the specimens are assembled, the nails are driven perpendicular to the face of the wood (the joint surface). Normally, distinction is made between

(1) nails effective in one section, wood thickness 10 d or 5 d.
(2) nails effective in two sections, wood thickness 10 d or 5 d.

In case (1) the nails are driven to a depth where the nail tip only just goes through the main member. In case (2) nails are driven through all three members of the joint. Hence, case (2), member thickness 10 d, requires that the length of the nail is at least 30 d, point excluded. In case (1) four nails are normally driven from both sides, in case (2) two nails from each side. In both cases, there will be four nails in each joint with a capacity of transforming the lateral load.

The distance from centre of nail to centre of nail, to end of member and to "loaded" member edge shall be at least as shown in figure 10.1.

Test specimens, subject to testing in compression, must have member ends adjusted so that they are plane, parallel and perpendicular to the length direction of the joint.

---

* Note 10.1. In this measure and other measures within this section, given as multiples of d, d is the diameter of the nail, or an up to 25 percent higher value. For nails with rectangular (square) cross-section, the largest edge measure is used, for wired or twisted - the maximum diameter.

10.2 Test specimens wood-based panels/wood (or metal plates etc/wood)

Test specimens are made as symmetrical three-member joints, figure 10.1 IT (1) with the tested panels as side-members and wood as main member. The nails are driven through the side-members into but not through the main member.

The thickness of the main member is normally chosen thus that a total thickness of the main member and one-side member is approx. 5 mm over the length of the nail. In other respects the test specimens are manufactured in accordance with 10.1.

Test specimens wood-based panels/wood or steel plates/wood can alternatively be shaped according to figure 10.2.

10.3 Testing performance

Testing is carried out as stipulated in /1/. In addition is stipulated:

10.2.1 Equipment

For compression loading of test specimens, one or both of the loading heads must be adjustable so that the compression force is equally distributed over the two joints. At tension testing, suitable links should be used for the same purpose.

10.2.2 Loading

The load should in the last stage ($P > 0.7\ F_{est}$, where F_{est} is estimated maximum capacity, cf. /1/) be applied in such a way that the slip in the joints (mutual displacement of connected wood members) takes place at a constant rate of 2 to 2.5 mm per minute.

The testing is interrupted when the maximum load is reached or normally after the displacement between main member and side members reaches 7.5 mm (the displacement between the jointed main members in connec-

tion type IT, figure 10.1, reaches 15 mm, cf. /1/).

10.2.3 Measuring of displacement

The displacement in the joints is given as the mean value of the displacement in the two joints between the main member and the side members. Only the displacement in the direction of the force must be measured. At testing of specimens in tension (IT in figure 10.1), two values of displacement from two pair of joints are thus obtained.

Note. The displacement is preferably measured directly between members at the middle level of the joints (centre of nail group). At testing specimens in compression (IC and IIC in figure 10.1), the displacement may be taken as the displacement of the loading head, corrected for compression of head and supports as well as in the members.

10.2.4 Report

Additional to what is stipulated in section 11, the testing report shall include the following data:

a) Density, moisture content, dimensions and angle between fibre or other principal direction and force direction for side members (mean) as well as for the main member.

b) The orientation of the cross-section of the nail with respect to the direction of the load.

c) If preboring, the diameter of the hole (drill diameter).

d) Maximum load or - if maximum load is not obtained - the load at 7.5 mm displacement, cf. 10.2.2.

e) Load displacement curve as recorded stepwise /1/ or continuously. Displacement at maximum load or - if the test is interrupted before maximum load (capacity) is recorded - displacement when loading is interrupted.

f) Mode of failure.

11 Testing report

Additional to what is stipulated in sections 7 to 10, the testing report shall include the following information:

a) Wood species, density and moisture content of the wood. Density ρ is normally given as the ratio between the mass of the dry wood ($\omega = 0$) and volume at a specified moisture content (ω). Individual values, the standard deviation and mean should be given.

   The moisture content at nailing should be given with a total mean for groups of specimens. The moisture content at testing should be given as a total mean for groups of specimens and with mean values for individual specimens. Conditioning data: Temperature, relative humidity, time.

b) Dimension of members.

c) Dimension of nails (specified by measures, figure 7.1), surface treatment and strength. At testing in joints (section 10) also the bending strength of nails obtained in accordance with section 9.

   Measures and strength are stated with nominal value, mean value and standard deviation within uniform groups of nails.

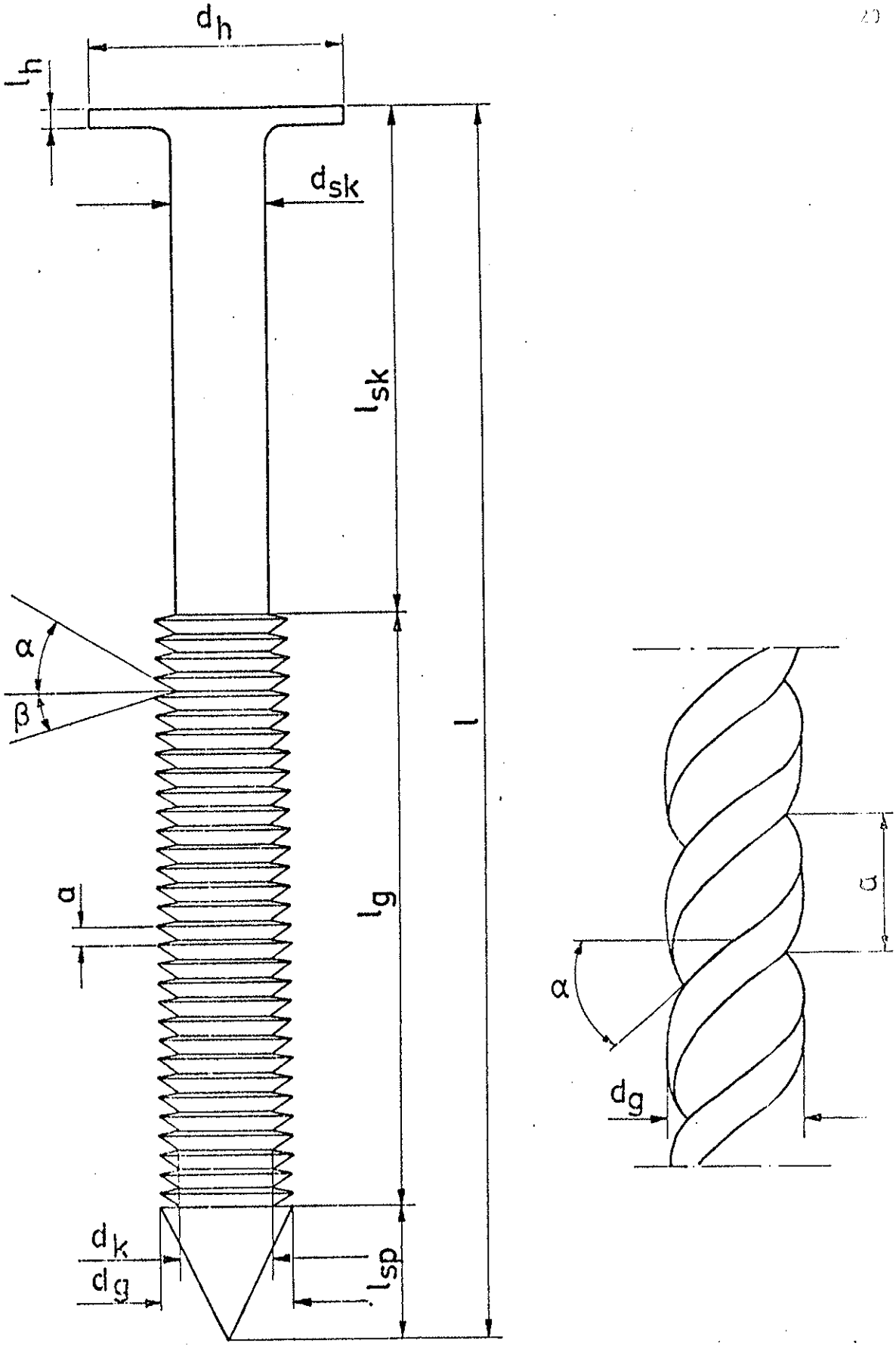

Figure 7.1. Example of measuring a wired nail and a twisted nail.

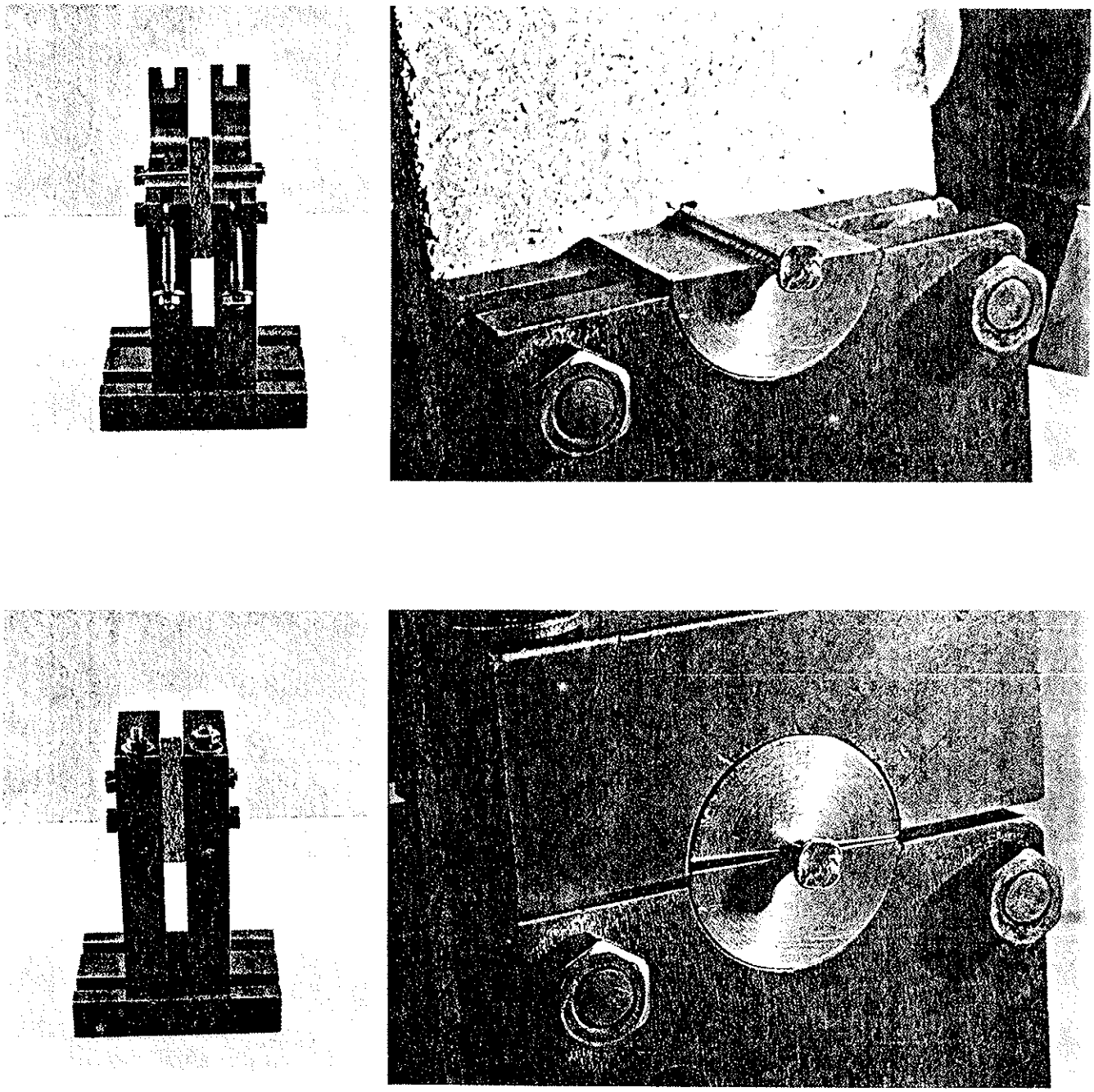

Figure 8.1. Jig for embedding testing. Above, open for inserting of specimens. Below, closed for testing by compression of load on the main member (particleboard specimen).

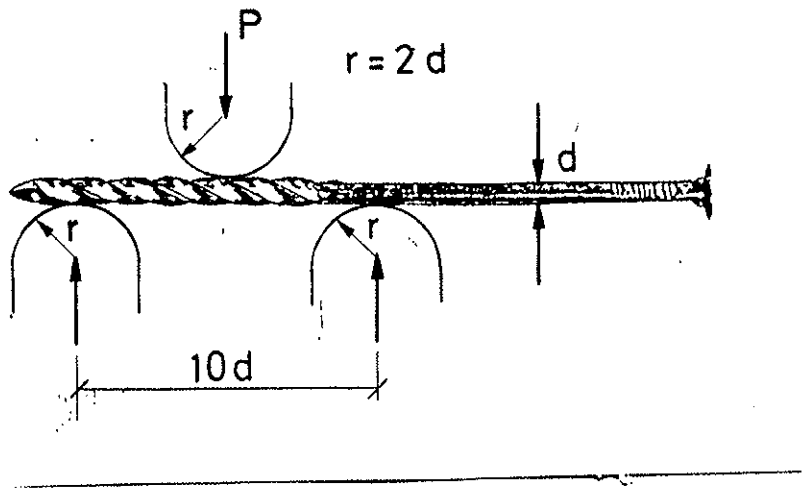

Figure 9.1. Testing of nail in bending.

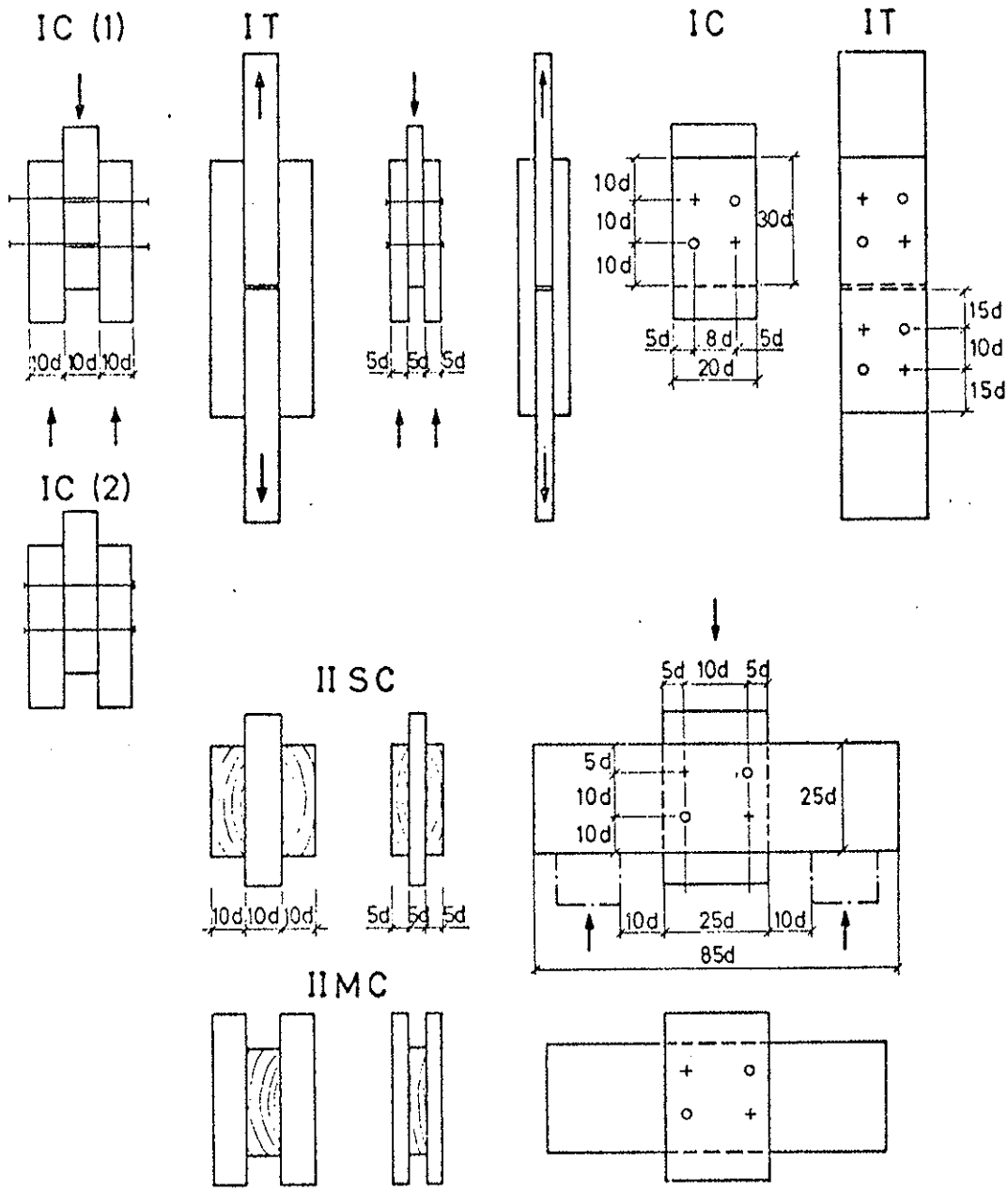

Figure 10.1. Normal test specimens for loading in compression (C) and specimens for loading in tension of nail (T). I Fibre direction parallel with intended direction of force in side members and main members. II S Fibre direction perpendicular to intended direction of force in the side members. II M Fibre direction perpendicular to intended direction of force in the main member. (1) nails effective in one joint. (2) nails effective in two joints. Given dimension of members are required, other measures may be exceeded.

Note Disagreement between individual measures and the total indicate tolerances.

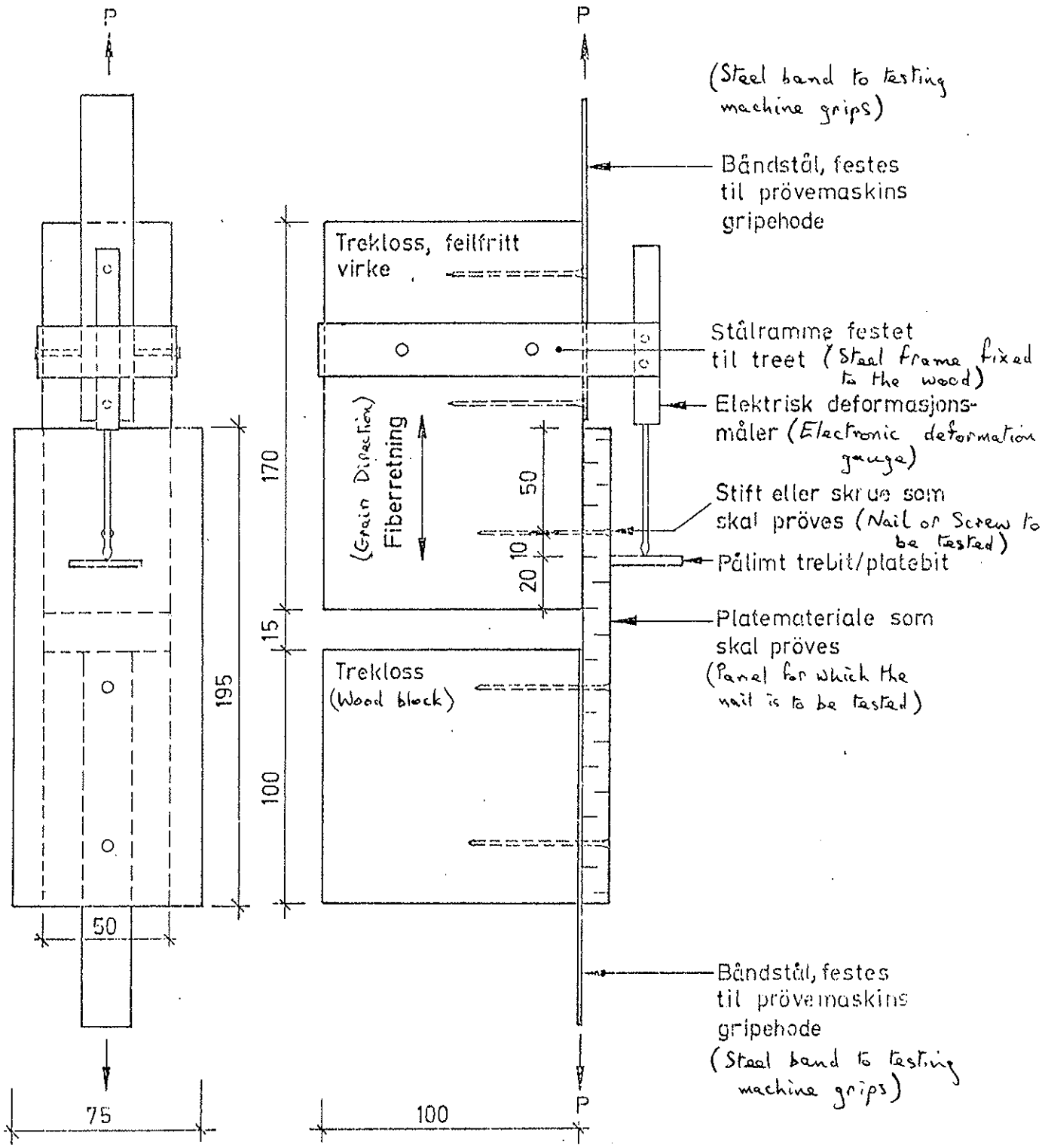

Figure 10.2. Alternative specimen for testing of nails in joints wooden panels/wood.

CIB-W 18/14 - 7 - 3

INTERNATIONAL COUNCIL FOR BUILDING RESEARCH STUDIES AND DOCUMENTATION

WORKING COMMISSION W 18 - TIMBER STRUCTURES

LOAD-SLIP-RELATIONSHIP OF NAILED JOINTS

by

J. Ehlbeck and H.J. Larsen

WARSAW, POLAND
MAY 1981

Load-Slip-Relationship of Nailed Joints

by J. Ehlbeck and H.J. Larsen

1. Introduction

The load-deformation relationship of nailed joints is important to know if any deformations of a nailed construction under design loads are to be calculated. It is well known, however, that a linear correlation between the applied load and the mutual slip of the wood members does not exist even in the low load range, i.e. in the range of design loads. The slip of a nailed joint is influenced by many parameters, such as wood species and its physical and mechanical properties (density, grain orientation, moisture content, modulus of elasticity, displacement modulus, embedding strength etc.) including the time dependence of all these characteristics as well as the properties of the nails (nail diameter, modulus of elasticity, yield strength or yield moment etc.). Furthermore, continuously changing environmental conditions, the load intensity, and the joint configuration, i.e. member thickness, nail location and nail spacing, including the distances from the member sides and ends are of influence on the load-deformation behaviour of nailed joints.Under these aspects it is not possible to describe the load-slip relationship using a formula which takes into account all parameters in a simple and practicable manner. On the other hand, in many cases the deformations during load transmission cannot be disregarded.

Many studies all over the world were undertaken based on elastic theories or using empirical methods by evaluation of test data. Yet, much more research effort is necessary to enlarge the knowledge in this field, especially with respect to the increasing application of woodbase materials for load-carrying joints. It is not the intention of this paper to discuss all publications and methods of this subject matter, but a proposal shall be presented, in the scope of which all important and significant factors may be integrated by using appropriate modification factors, whenever available.

2. Basic Formula

Among others MACK (1966) developed and presented an empirical formula taking into account that from the beginning the load-slip curve of a nailed joint is not a straigth line. This formula fits MACK's test data with Australian wood species in the low load range below a 2.5 mm - slip which always can be assumed to be higher than the slip under design load of short-duration. Assuming that MACK's formula may be generalized for a slip range

$$0 < s < s'$$

with s = slip in mm
and s' = upper slip limit for which the formula is valid,

a basic formula reads :

$$\frac{F_s}{F_{s'}} = \left(A \cdot \frac{s}{s'} + B \right) \left(1 - \exp\left[C \frac{s}{s'} \right] \right)^D \qquad (1)$$

with F_s = load in N at slip s
$F_{s'}$ = load in N at slip s'
and A,B,C,and D being constants which have to be determined by tests.

MACK determined these constants from test data with ten Australian wood species, assembled with any of three nails of 2.6-mm, 3.7-mm, or 4.5-mm diameters and established an overall function with A = 0.32, B = 0.68, C = -7.5, and D = 0.7. This normalized function describes the shape of the load-slip curves in the stipulated range of validity. With respect to different nail diameters and wood species, MACK introduced modification functions, such as

$$C_{nail} = 0.165 \times d_n^{1.75} \qquad (2)$$

with d_n = nail shank diameter in mm and a "stiffness modulus", C_S , representing the relevant mechanical properties of the wood species used. This stiffness modulus is a modifying factor which calibrates the load-slip-curve in such a way that at the upper slip

limit, s', the load $F_{s'}$ is given by the factor

$$F_{s'} = C_S \cdot C_{nail} = C_S \cdot 0.165 \times d_n^{1.75} \tag{3}$$

A combination of Eqs. (1) and (3) describes the load-slip curve :

$$F = F_s = C_S \cdot C_{nail} (0.32 \frac{s}{s'} + 0.68)(1 - \exp[-7.5 \frac{s}{s'}])^{0.7} \tag{4}$$

Other variables, e.g. moisture content, nail shape, direction of grain as related to load direction etc., can be taken into account by additional coefficients or functions.

3. Approximation for load-slip curve

Assuming that MACK's function is valid for

$$0 < s < \frac{2}{3} \cdot d_n \tag{5}$$

i.e. $s' = \frac{2}{3} d_n$, then the relationship

$$\frac{F}{F_{s'}} = \frac{F}{F_{\frac{2}{3} d_n}} = (0.48 \frac{s}{d_n} + 0.68)(1 - \exp[-11.25 \frac{s}{d_n}])^{0.7} \tag{6}$$

can be derived.

A good approximation of Eq. (6) is

$$\frac{s}{d_n} = 0.20 \left(\frac{F}{F_{\frac{2}{3} d_n}}\right)^{1.54} \tag{7}$$

as is obvious from the following tabulation :

$\frac{s}{d_n}$	$\frac{F}{F_{\frac{2}{3}d_n}}$ from $\varepsilon_{q.}(6)$	$\frac{s}{d_n}$ from $\varepsilon_{q.}(7)$
0.005	0.0893	0.0048
0.010	0.1427	0.0100
0.015	0.1866	0.0151
0.020	0.2247	0.0201
0.025	0.2587	0.0249
0.030	0.2894	0.0296
0.035	0.3176	0.0342
0.040	0.3436	0.0386
0.050	0.3901	0.0469

Thus, MACK's formula can be replaced by this approximation, at least as long as $F < \frac{1}{3} \cdot F_{\frac{2}{3}d_n}$

It can be expected that

$$F_{\frac{2}{3}d_n} = C_1 \cdot F_k \tag{8}$$

with $C_1 < 1$ and F_k = charakteristic load, i.e. the lower 5-percentile of ultimate load-carrying capacity of the joint.

Hence, from Eq. (7) :

$$\frac{s}{d_n} = 0.2 \left(\frac{F}{C_1 \cdot F_k}\right)^{1.54} \tag{9}$$

Stipulating a serviceability load of $F_k/3$ with a slip of $0.1 \times d_n$ at this load, the relative slip, s/d_n can be estimated as

$$\frac{s}{d_n} \approx A \left(\frac{F}{F_k}\right)^{1.54} \tag{10}$$

with

$$A = 0.2 \frac{1}{C_1^{1.54}}$$

.//.

Introducing $F = F_k/3$ and $s = 0{,}1 \cdot d_n$, the factor A results from Eq. (10) :

$$A = 0{,}1 \cdot 3^{1{,}54} = 0{,}543$$

Hence, the slip of a nailed joint can be calculated from the formula

$$s = 0{,}543 \cdot d_n \left(\frac{F}{F_k}\right)^{1{,}54} \tag{11}$$

within the range of $0 < F < F_k/3$.

With respect to the assumptions made, a sligth simplification may be justified by using the formula

$$s = 0{,}5 \cdot d_n \cdot \left(\frac{F}{F_k}\right)^{1{,}5} \tag{12}$$

given in the CIB Structural Timber Design Code, 5th edition, August 1980, Eq. 6.1.1.1 c.

4. Slip Modulus

The slip modulus, k, of a joint is defined as the ratio of the load over the slip, denoting the load generating a slip of unity. Hence, the slip modulus is not a constant because the load-slip curve is not a straigth line.

The slip modulus at the serviceability load, let us say $F_k/3$, is :

$$k = \frac{F_k}{3 \cdot s} = \frac{F_k}{0{,}3 \cdot d_n} \tag{13}$$

It represents the secant modulus for $F = F_k/3$.

For joints loaded with $F < F_k/3$, the slip modulus may be increased :

$$k' = \frac{F}{s} = \frac{F_k^{1.5}}{0,5 \cdot d_n \cdot F^{0.5}} = \frac{F_k}{0.3 \cdot d_n} \cdot \frac{0.3}{0.5} \sqrt{\frac{F_k}{F}} \qquad (14)$$

Hence,

$$k' = 0.6 \sqrt{\frac{F_k}{F}} \cdot k \qquad (15)$$

References :

Mack, J.J. 1966. The Strength and Stiffness of Nailed Joints Under Short Duration Loading. CSIRO, Div. of For. Prod. Techn. Paper No. 40, Melbourne, Australia.

CIB-W 18. 1980. CIB Structural Timber Design Code, 5th Edition.

SWEDISH FOREST PRODUCTS
RESEARCH LABORATORY

CIB-W18/14-7-4

INTERNATIONAL COUNCIL FOR BUILDING RESEARCH STUDIES AND DOCUMENTATION

WORKING COMMISSION W18 - TIMBER STRUCTURES

WOOD FAILURE IN JOINTS WITH NAIL PLATES

by

B Norén

Swedish Forest Products Research Laboratory
SWEDEN

WARSAW, POLAND

MAY 1981

Bi. 4 3000 74 10 KDB

SWEDISH FOREST PRODUCTS
RESEARCH LABORATORY

1981-05-07 Bengt Norén/YL

WOOD FAILURE IN JOINTS WITH NAIL PLATES

Bengt Norén, Swedish Forest Products Research Laboratory

Definitions

Rules for design of joints with nail plates identifies three principal modes of failure: Plate failure, grip failure and wood failure. /1/. In the wood failure mode is not included such crushing and shear in the wood between the nails which is directly implied in the grip failure, neither is wood failure initiated outside the connection borders included. What these borders are is to some degree a matter of judgement. After this limitation wood failure within the joint for reason of simplicity is treated in the design rules as either compression or tension or shear failure also in the case that failure is generated by combined stresses.

Shear failure at truss connections

In the following two connections are treated, one being the "K-connection" where two web members meet a chord, the other being the heel joint in a roof truss, where the rafters meet the bottom chord.

The K-connection

In none of the four models of the K-joint, shown in Figure 1, where the web members (diagonals) are linked to the chord, possible moments in diagonals are transmitted to the chord. In the a-model the forces in the diagonal will have an influence on the moments in the chord provided their resultant has a component perpendicular to the chord. On models b and c a moment in the chord will always be generated by forces in the diagonals. This moment is often referred to as an eccentricity moment,

BI 4 3000 74 10 KDB

the eccentricity defined either as the intersection on the centre line of the chord of the centrelines of the diagonals, or, as here, as the distance from the point of intersection of the centrelines of the diagonals to the centreline of the chord.

It is a good code policy to assume that such additional moments and the corresponding shear force should be considered in the design. On the other hand there are examples where a limit is given below which the eccentricity may be neglected at least for the design of the very joints - number of nails, nail plate size, etc. This is the case in the present Swedish code /2/, where the model *a* may be applied as long as the intersection point of the diagonals falls within the depth of the chord (h), that is, the eccentricity does not exceed h/2.

When nailplates are used the rule is in most cases applied to allow the diagonals to meet inside the chords - centrelines at the edge - in order to save plate area (model c). However, the rule is also applied, particularly in nailed trusses, for separating the diagonals by which these may be made shorter. This has caused the authorities to point out that the shear strength of the chord must be verified also within the connection, that is between the points of intersection shown in Figure 1, model b. This was new to the designers and not much appreciated in the cases where this increased the formal shear stress to a value well over what is permissed. With referens to the fact that the high shear stresses appears only on a short length in the fibre direction (in which a shear failure would appear) particularly if the succesive transmission of the force in the nailed joints is regarded, one proposal was that shear forces generated on a shorter length than the depth of the timber should be neglected. The proposal was rejected with reference to lack of evidence.

Another proposal is that a mean value of shear force over a length equal to the depth of the member is used to calculate the shear stress value (τ_o) which must not exceed the design value. This proposal is introduced in /1/:

"2.4.3 Shear..... The mean values of τ_o is determined over a length equal to the depth..... '

The heel connection

Figure 2, reproduced from a STFI-report published 1974 /3/, shows a design of the heel joint in trusses, common at that time. The centre lines of the chords and the support meet in one and the same point, so there is no geometric eccentricity. The model used to determine member forces was in practice also used for the design of the connection. This means that the shear stress in the upper chord is checked in the section C-C when it should have been checked in section A-A where it is five times as large. Not until the first cross section (B-B) that cuts through the plates will the horizontal forces from nails start to reduce the shear force gradually. The shear stress in sections from A to B was twice the permissed value.

In stead of doubling the member thickness it should be satisfactory to increase the length of the plate to reach the section A-A or, even better, the central line of the support. If the clause 2.4.3 in /1/ is applied the shear stress τ_o is found from the mean value of the shear force Q_A in section A-A and the shear force in a section on the distance h inside A-A. This mean value will be about $0,5(Q_A+0,6Q_A)=0,8Q_A$. Simultaneously, the design stress value (permissed value) is increased by the factor $1+2rs_P/(\tau_{0D}\ B)$ in which the second term is the ratio of shear stress design values (N/mm) of respectively the plates and the timber. B is timber thickness. The choice of τ_{0D} is problematic because the different safety and duration factors involved. If τ_{0D} is given the low long term value of the code, 1,0 N/mm^2, which is only 1/6 of the expected characteristic value of shear strength of timber with none or small fissures, the efficiency of reinforcement by the plates is probably exaggerated. A possibility would be to use the charateristic (5-percentile) short term test values for the ratio s_D/τ_D and possibly stipulate an upper limit. For the example, Figure 2, the efficiency factor then is $1 + 2 \cdot 0,8 \cdot 160/(6 \cdot 45) = 1,94$.

According to this and the modified shear force the strength of the connection with the longer plate is 1.94/0.8 = 2.4 times as strong as the design with the shorter plate, provided it is shear somewhere along the centreline that causes failure.

Note. In calculating the efficiency factor shear in the plates is assumed to take place in the fiber direction and over a length $r \leq h$. It must then be checked that the grip area on any side of the shear line is sufficiently large to transmit the shear force in the plate to the wood. Such a check shows in the presented example that the expected efficience factor is not more than $0.7 \cdot 2.4 = 1.7$ because the small grip area above the centre line.

There should be a correspondent note in the proposed rule /1/ - 2.4.3

Tests

General

Both the K-connection and the heel connection have been subject to testing at STFI. The type of test specimens used appears from Figures 3 to 5. Altogether 35 K-connections and 35 heel-joints have been tested, which of course is a limited number. A full test report will be published, possibly after some supplementary testing is carried out. Hence, the performance of the testing, and the problems involved are here only touched on briefly and the results summarized.

Purpose

The purpose of testing was to study the ability of the wood in the connections to resist the shear force generated by excentricities in the static model or deviation in design from the model with respect to the distribution of forces. There was also the hope that the results could confirm the method of considering the reinforcement by the plates against shear failure.

Problems

The aim was primarily to produce shear failure in the chords (bottom chord and rafter). Simultanuously, there was the ambition to copy the design of the connections, the timber quality and loading conditions as found in practise. As well known from testing of timber constructions with mechanic connectors these aims are partly inconsistent. The design for long term loads will increase the risk for plate failure at the short term testing. And it is not easy to find timber with fissures of such size and such location as corresponding to the low shear stress values permissed in the code for design. This contributes to the difficulty of reproducing the shear failure in wood aimed at.

Three methods to produce shear failure were applied:

1) In half of the K-connections tested, the chord was grooved from both sides along the central line to depth allowed for fissures in the grade in question. This reduced the width of the shear plane to half the thickness of the timber.

2) The timber thickness used for the specimens was brought down from the 45 mm used in practice to 35 mm.

3) The plates were chosen larger than in practice.

Test results

The test results are here reproduced merely by the values of τ given in the figures 3 to 5. There are also picture at the end of the report to show modes of failure.

The τ is calculated as $\tau = 1{,}5\ Q/(Bh)$ where Q is the shear force. Bh is the area of the chord cross section. Thus, τ is proportional to the failure load of the test specimen also in cases where the failure was not caused by shear.

After testing the shear strength of the chord was determined on ASTM block shear tests.

At joints without eccentricity (K0) it was not possible with the equipment used to achieve failure. Apparently, the small shear stresses do not create any problems. However, the second series of tests (K1) where the eccentricity already is modest the shear strength is substantially reduced. It is further reduced in the specimens with the eccentricity equal to the depth (K2).

In the last case (K2) the distance between the effective parts of the plates is about equal to the depth (h). This means that the formula in /1/ 2.4.3 for stress calculation does not recognize any reinforcing effect from the plates. Hence, the results indicate that the shear strength of the wood in the chord is 6.2/9.1 = 0.68 that is 30 % lower than what the ASTM-test shows.

This can be used for estimating the reinforcement efficiency in case K1, which is $7.7/(0.68 \cdot 9.4) = 1.2$.

If the rule from /1/ is applied and the grip strength of the plate corners considered the theoretical efficiency is 1.5. However, the shear failure appears above the central line where the theoretical efficiency is lower. It may be observed that the shear strength is reduced by the grooves (s) although not in proportion to the residual thickness.

As seen from the photographies the final shear failure appeared along the central line in the specimens K2. This was also the first fissure of any significance to appear. On the contrary the fissures appeard successively in the connection K1 and it is not possible to identify any particular fissure that caused failure.

The importance of reinforcement from the plates at the heel joints has already been mentioned when the design as in Figure 2 was discussed. This is rather drastically confirmed by the results in Figure 4. A very

small displacement (60 mm) of the plate more than doubled the strength. The rather low strength of the connection where the plate just about reaches the support is surprising and not in accordance with the efficiency value 1.7 calculated for the similar joint in Figure 2.

It seems to be a recommendable design to let the plates reach the theoretical central line of the support. If again the basic shear strength is assumed to be 0.7 times the ASTM stress, the efficiency factor according to the test result is $12.6/(0.7 \cdot 10.5) = 1.7$.

The Figure 5, where the roof angle is 14°, gives the same low strength in case T14/1. There is very little reinforcement from the plates (see picture of failure). In this case the use of large plates which reach the middle of the support has not increased the strength of the connection by more than 50 %. However, the failure mode is not the shear in the fiber direction aimed at. Part of the reason is that these tests are difficult to perform without generating undesirable forces and moments.

Conclusion

The results confirm the reinforcing effect in princip as expressed by the proposal for verification of shear strength in /1/ 2.4.3. However, it might be necessary to modify it in detail, particularly with respect to the heel connection.

References

/1/ CIB/W18/14-7-1

/2/ Rules for general approvals No. 4. The national Swedish board of urban planning (1974). In Swedish.

/3/ STFI (Swedish Forest Products Research Laboratory) Report N No. 296/TT B:54 (1974).

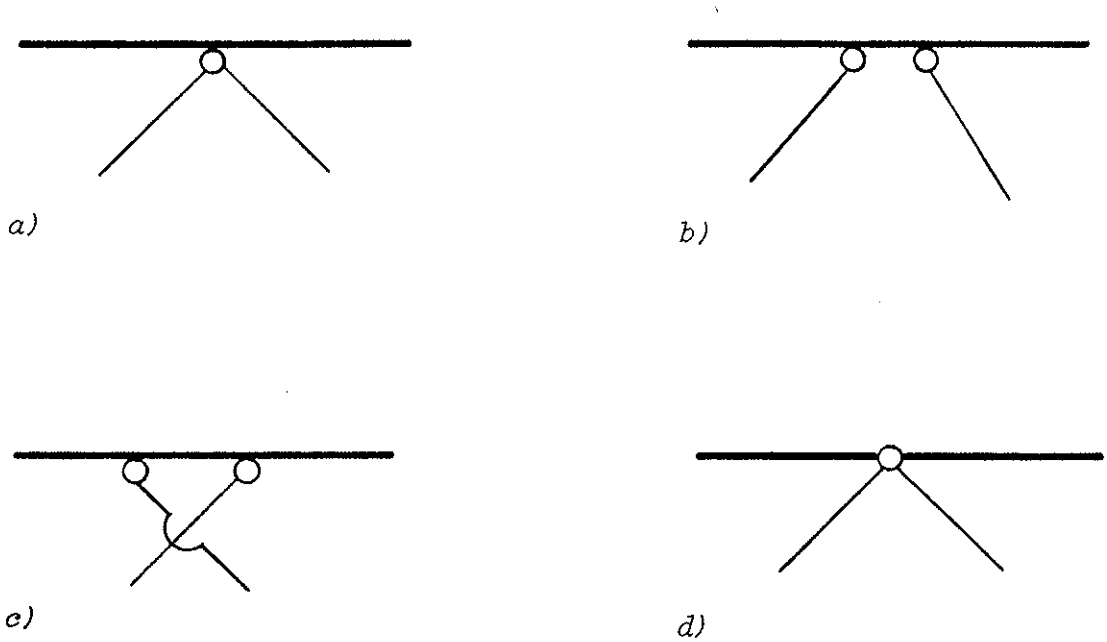

Fig. 1 Models for the K-connection

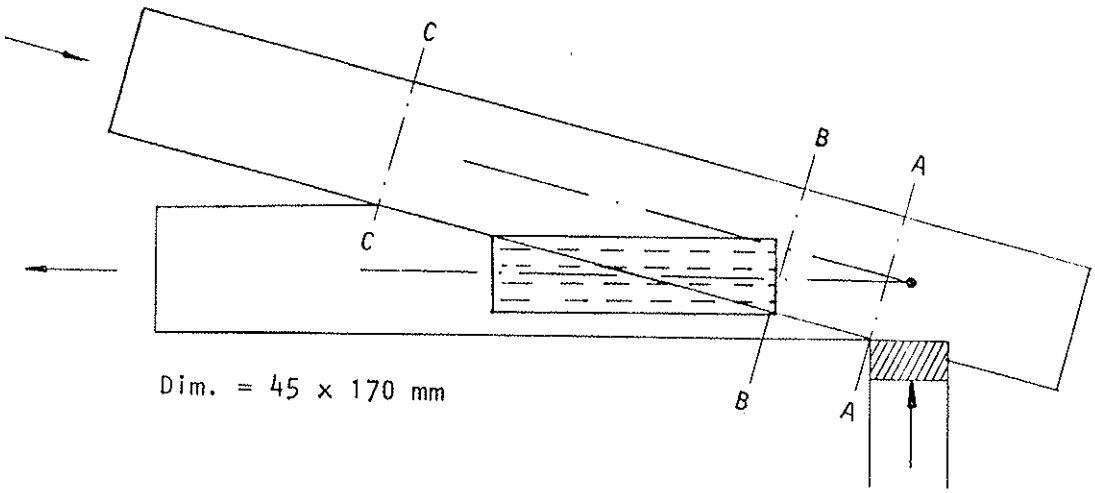

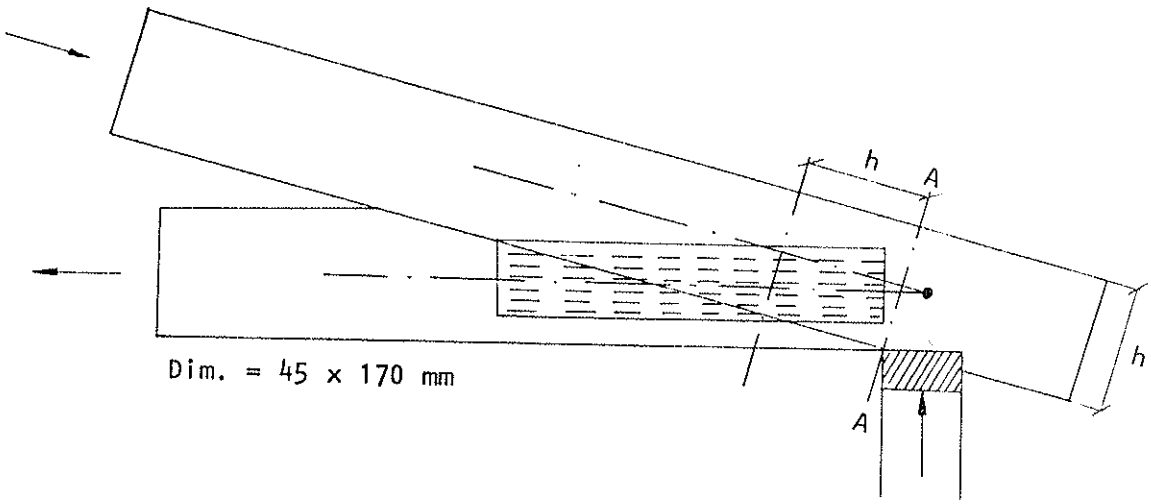

Fig. 2. Heel connection. The design at the top will give unacceptably high shear stress in the rafter.

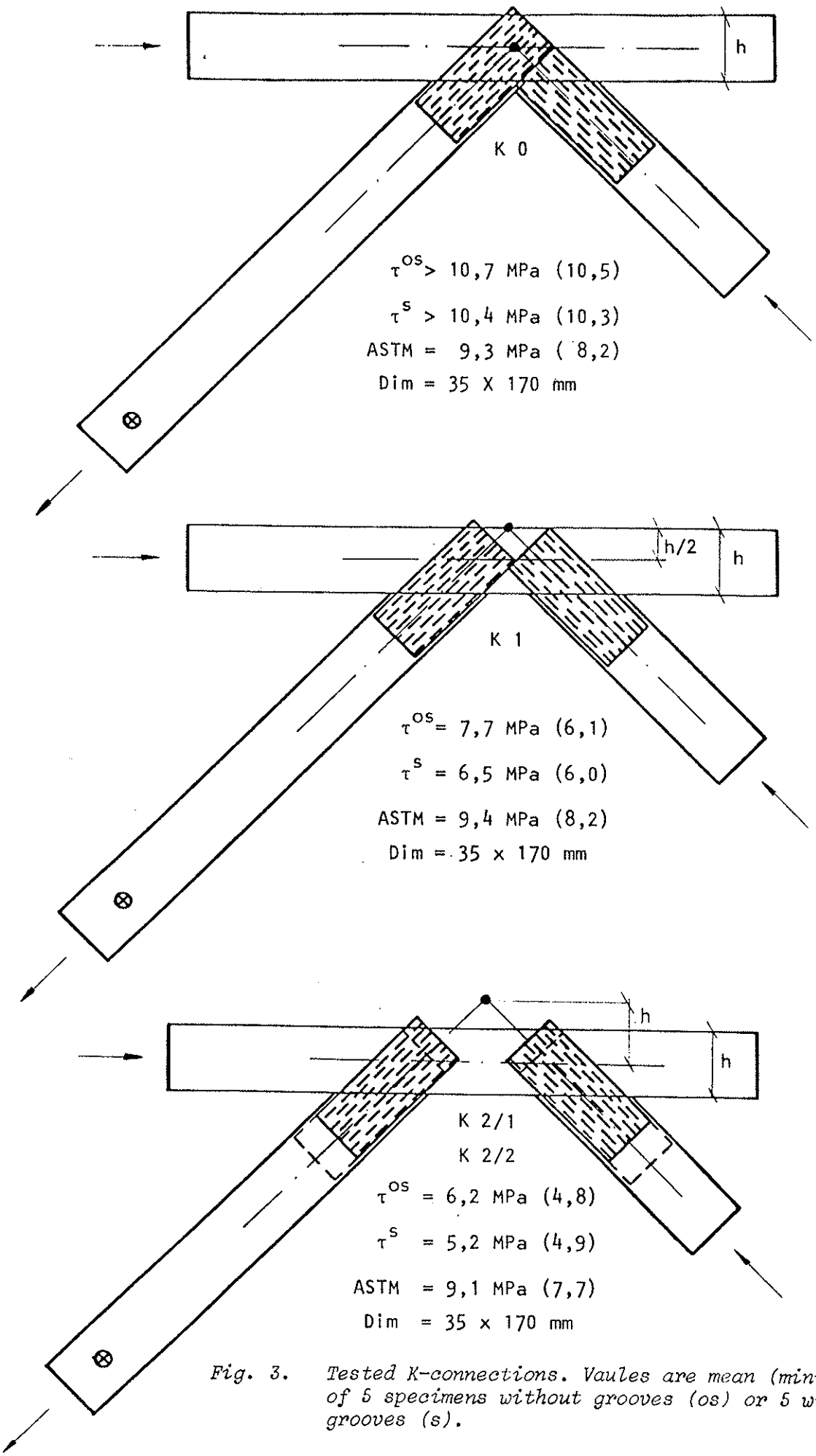

Fig. 3. Tested K-connections. Vaules are mean (minimum) of 5 specimens without grooves (os) or 5 with grooves (s).

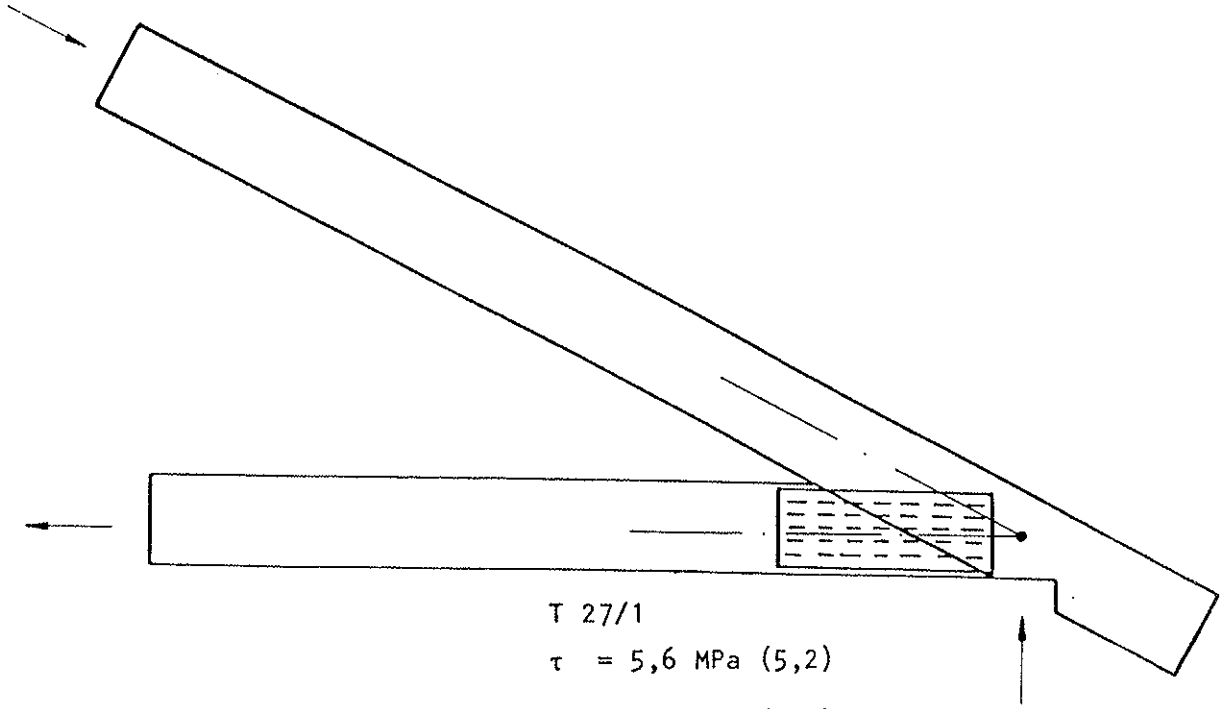

T 27/1

τ = 5,6 MPa (5,2)

ASTM =10,2 MPa (9,0)

Dim = 35 x 170 mm

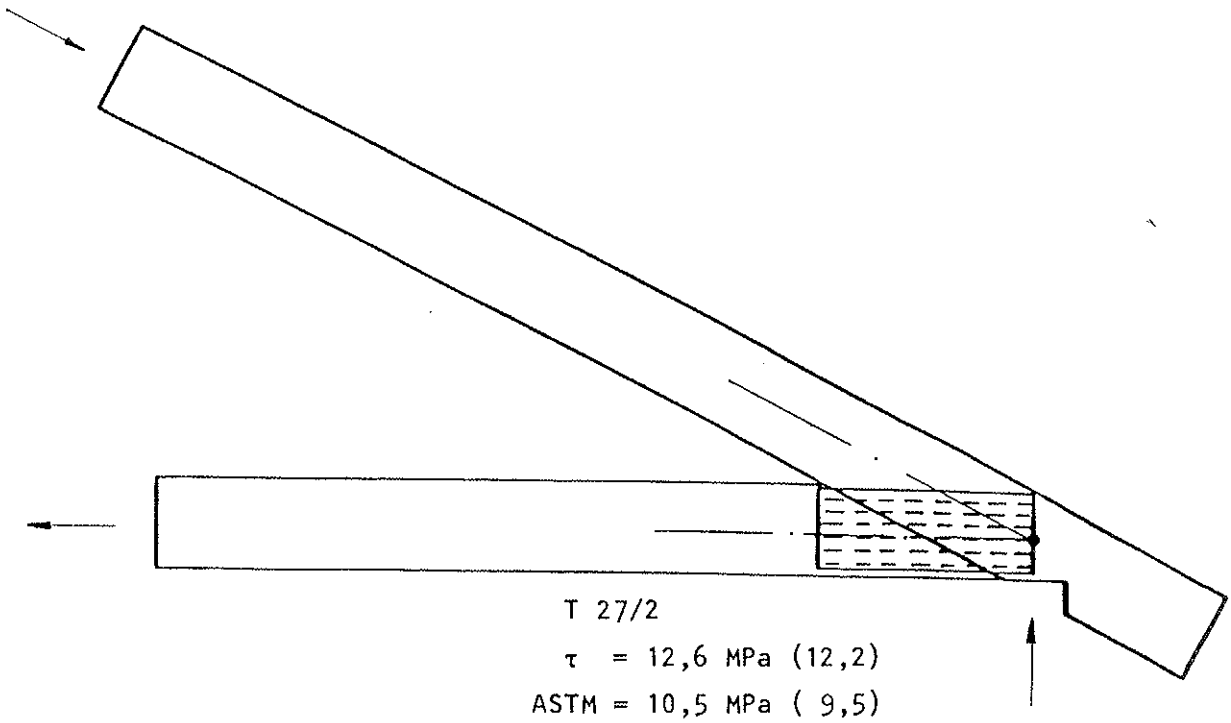

T 27/2

τ = 12,6 MPa (12,2)

ASTM = 10,5 MPa (9,5)

Dim = 35 x 170 mm

Fig. 4. Tested heel connections at 27° roof angle.

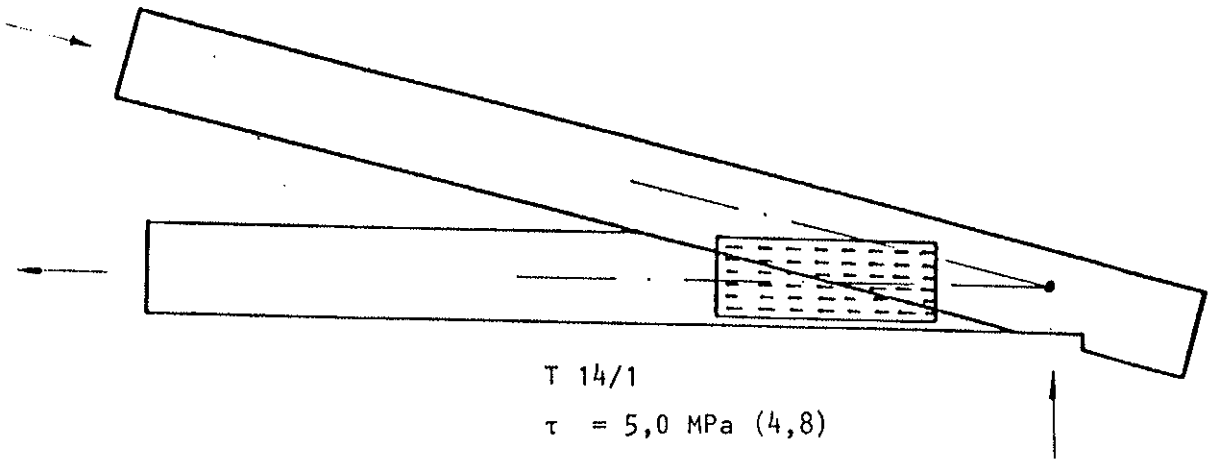

T 14/1

τ = 5,0 MPa (4,8)

ASTM =

Dim = 35 x 170 mm

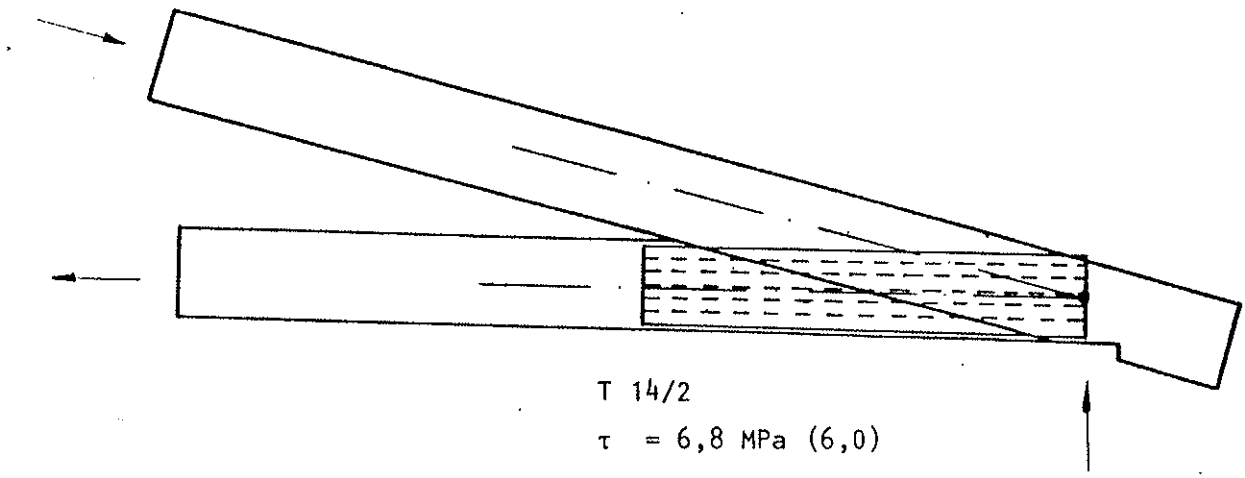

T 14/2

τ = 6,8 MPa (6,0)

ASTM = 8,8 MPa (8,5)

Dim = 35 x 170 mm

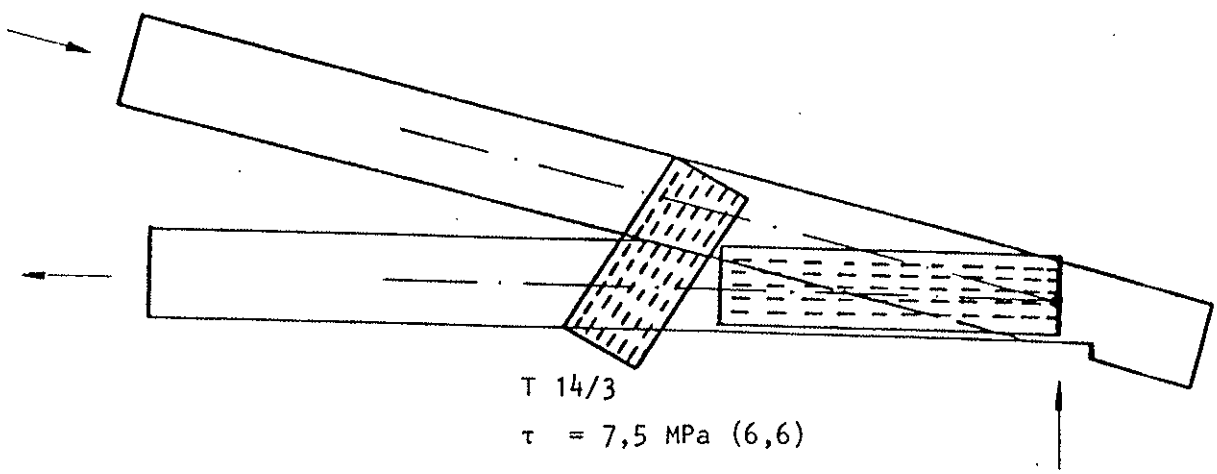

T 14/3

τ = 7,5 MPa (6,6)

ASTM =10,1 MPa (8,1)

Dim = 35 x 170 mm

Fig. 5. Tested heel connections at 14° roof angle.

SWEDISH FOREST PRODUCTS
RESEARCH LABORATORY

FIGURES OF FAILURES

BI 4 3000 74 10 KDB

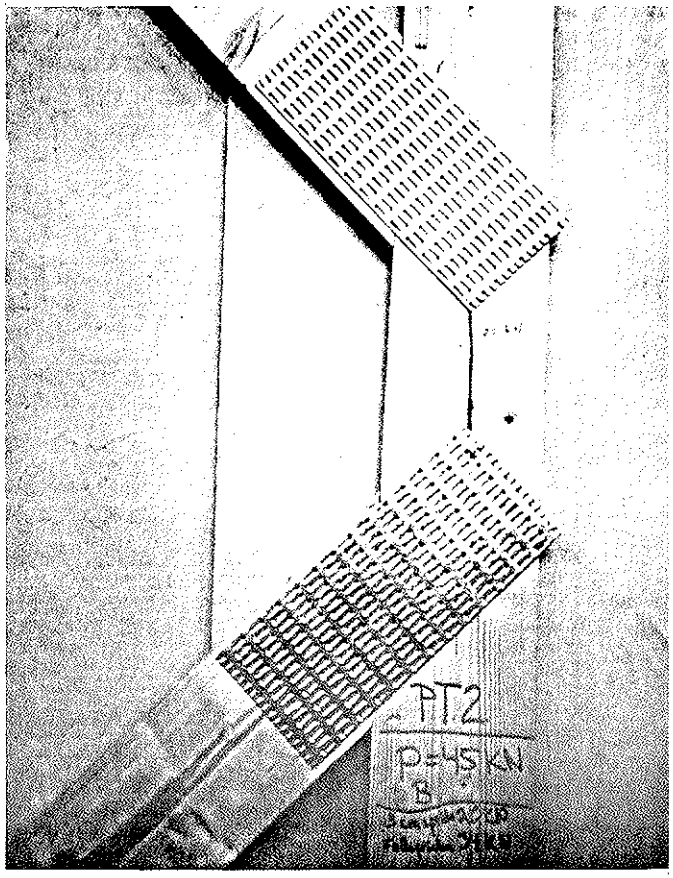
PT2
P=45KN
B

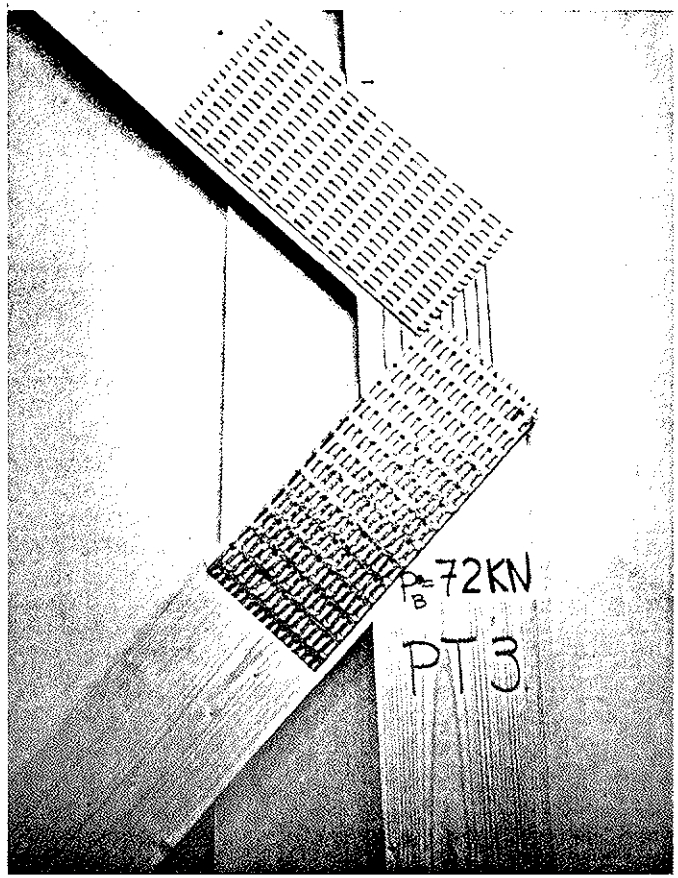
P=72KN
B
PT3

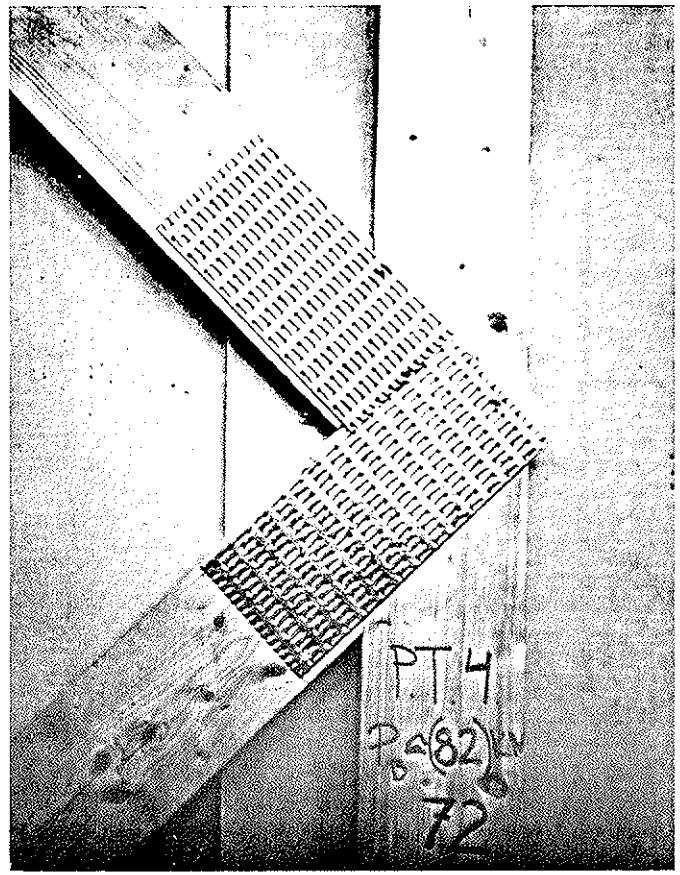
PT4
P=(82)KN
B
72

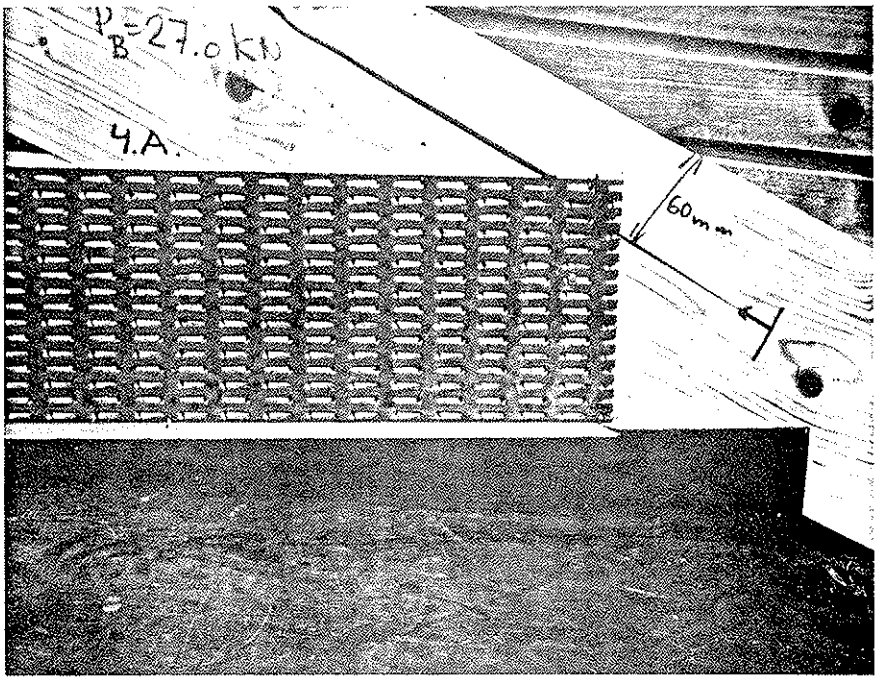
P_B=27.0 KN
4.A.
60mm

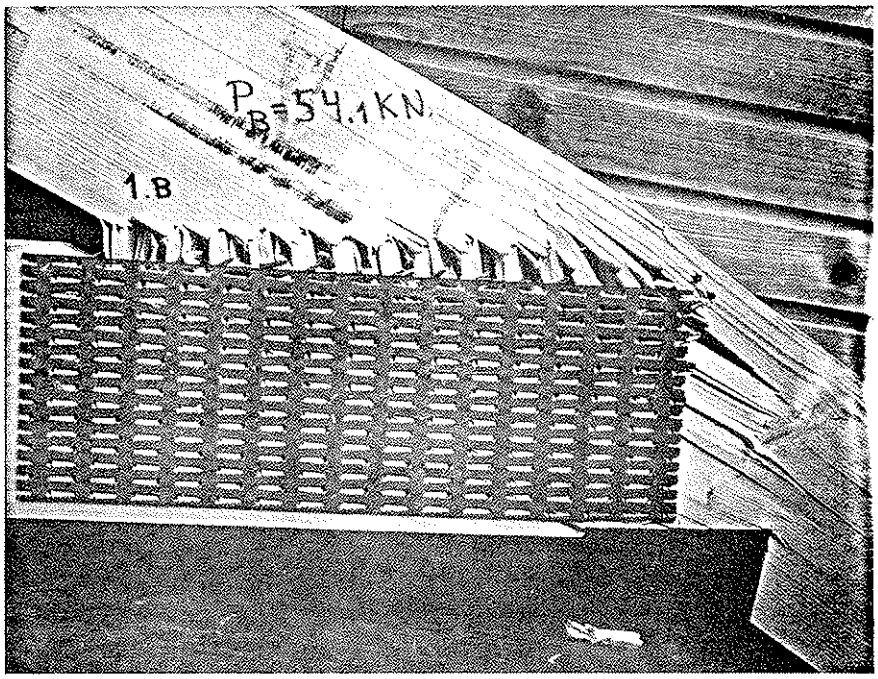
P_B=54.1KN.
1.B

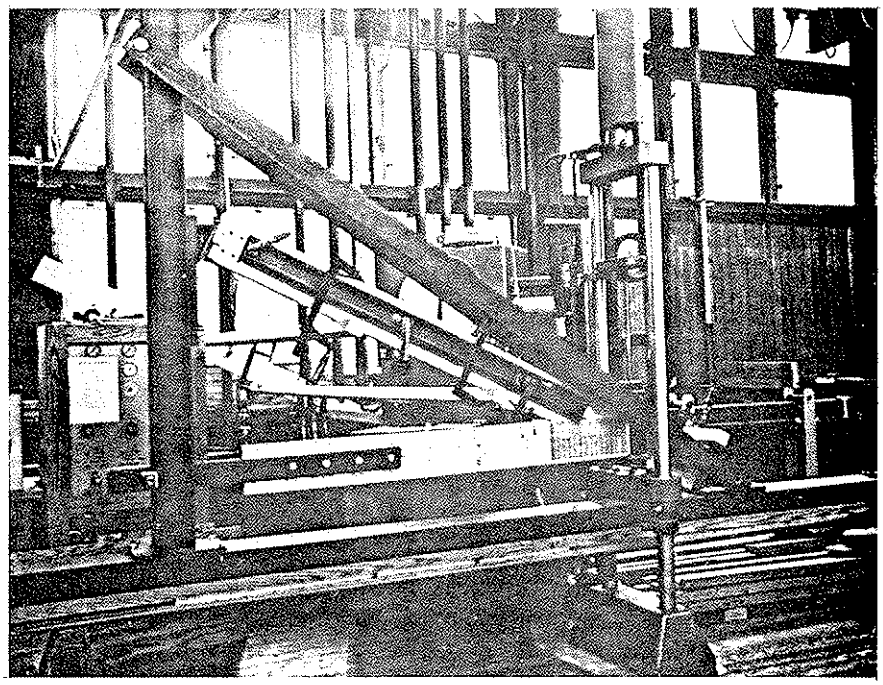

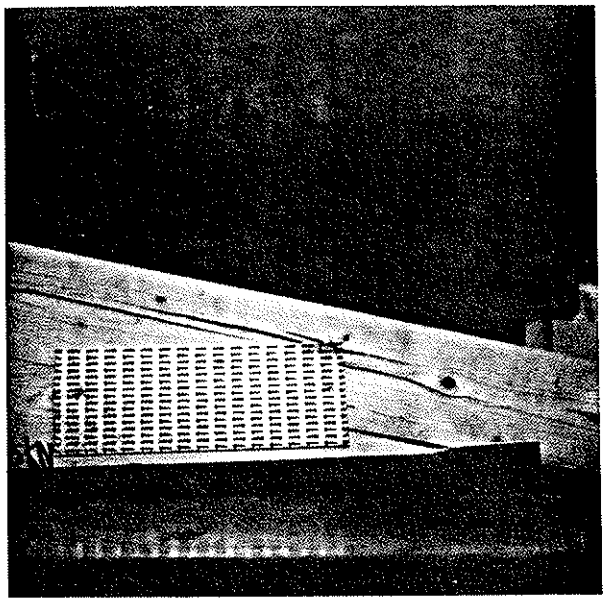

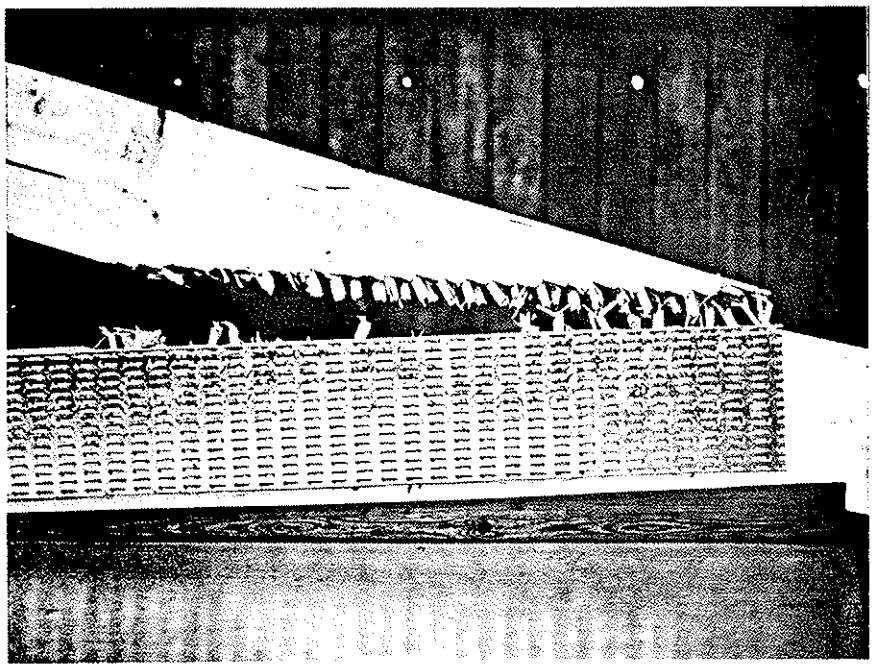

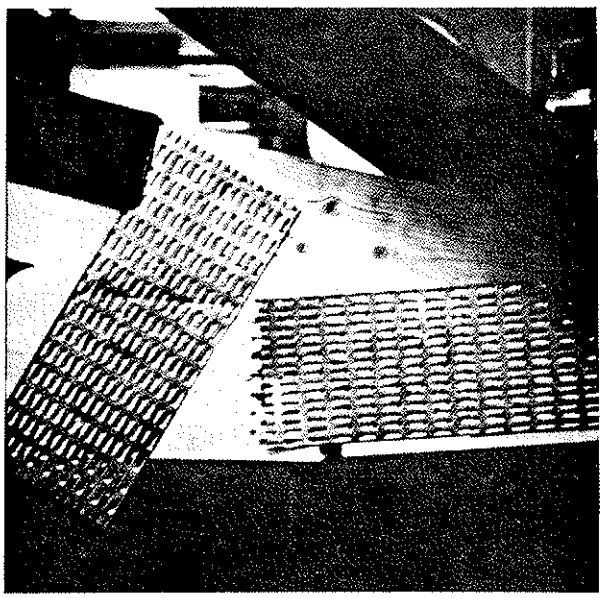

TS 10

SWEDISH FOREST PRODUCTS
RESEARCH LABORATORY

CIB/W18/14-7-5

INTERNATIONAL COUNCIL FOR BUILDING RESEARCH STUDIES
AND DOCUMENTATION

WORKING COMMISSION W18 - TIMBER STRUCTURES

THE EFFECT OF SUPPORT ECCENTRICITY ON THE DESIGN OF W- AND WW-TRUSSES WITH NAIL PLATE CONNECTORS

by
Bo Källsner
Swedish Forest Products Research Laboratory
Sweden

Warsaw, Poland

May 1981

B: 4 3000 74 10 KDB

SWEDISH FOREST PRODUCTS
RESEARCH LABORATORY

1981-05-08 Bo Källsner/YL

INTRODUCTION

The basis for this paper is the STFI-report Series A No. 675 entitled "The Effect of Support Eccentricity on the Design of W- and WW-Trusses with Nail Plate Connectors". The report is written in Swedish with an English summary and figure texts. An unabriged translation will be published later this year. An extract from the report was presented in the CIB/W18-meeting in Otaniemi under the title "Design of Joints with Nail Plates - the Heel Joint".

BACKGROUND

The background is that about 200 full-scale tests of roof trusses have been carried out at STFI, many with support eccentricity i e with the support removed inside of the intersection point between the center lines of the chords in the heel joint. One problem is that the tests have been partly financed by nail plate manufacturers who do not want to make the results public. By this reason only some findings of a general nature have been presented in the report.

PURPOSE

The purpose of the report is to:

- review generally the available literature concerning support eccentricity for W and WW-trusses,
- examine critically test results and calculation models,
- describe the factors which affect the structural behaviour and the load-carrying capacity of roof trusses,
- discuss appropriate heel joint constructions
- propose design methods.

Bo 4 3000 74 10 KDB

LITERATURE SURVEY

In the literature survey results are reprinted from a number of Nordic studies of roof trusses. Areas discussed include timber quality, manufacturing precision, reinforcement of nail plate connections in short-term tests, etc.

FACTORS WHICH AFFECT THE STRUCTURAL BEHAVIOUR OF WOODEN ROOF TRUSSES

In a special chapter of the report, important factors are discussed which influence the behaviour and load-carrying capacity and which are not normally taken into consideration. Among the factors that can be mentioned are the stiffness and the strength variation in wood members and the non-linear behaviour of wooden members and joints.

DESIGN SOLUTIONS FOR THE TRUSS HEEL

Different designs of the heel in case of support eccentricity are discussed in the report. See figure 1. Both solutions with continuous upper chords and continuous lower chords in the heel are presented.

Nail plates can be placed in several different positions when roof truss heels are reinforced with wedges. Two main principles for the transfer of forces can be distinguished. The first principle is based upon a direct transfer of forces from the upper chord to the lower at the lower chord´s end cross-section (figure 2). The wedge is used here to distribute the support reaction between the upper and lower chords. The second principle is based upon a transfer of forces through nail plate connectors which extend from the upper to the lower chord via the wedge (figure 3). In this case the transfer of forces will take place considerably further in in the heel joint.

Truss heel designs of the type shown in figure 2 fail when the upper chord is broken at the top edge of the wedge at the same time as the

lower chord is broken at the bearing support. In trusses with a low roof slope other types of failures can occur. Figur 4 illustrates such a failure where the upper chord is broken further down. Failure occurs because the small nail plate which holds the wedge in place cannot prevent mutual displacements between the wooden parts. If the upper and lower chords could interact in a better way then failure would occur as in figure 2.

In the second principle of load transfer (figure 3) the failure in the lower chord occurs further in, namely at the innermost nail plate. This happens because the lower chord is hung from the upper chord and at the same time the nail plates ensure a sufficient interaction within the heel area of the chords. In such a case it is important that the nail plates extend sufficiently far onto the lower chord because otherwise there is a risk that the wood may split. Care should also be taken concerning the anchoring of the nail plates in the upper chord. If the support is not quite as eccentrically placed as in figure 3 then the shear stresses caused by the support reaction must be taken into consideration.

Two examples of roof trusses where the heel joint is reinforced with an additional upper chord are shown in figures 5 and 6. The different positions of the nail plates result in certain differences in the structural behaviour which is discussed below.

Concerning the roof truss of figure 5 it is assumed that the two horizontal nail plates which join the original upper chord and the additional one are designed to transmit the axial force of the upper chord. Due to the placement of the connectors the major part of the transfer of forces between the upper and lower chord will take place via the additional upper chord.

The design of the nail plate connectors in figure 6 is based upon the assumption that the axial force is transmitted in part between the original and the additional chord and in part directly between the

upper and the lower chord. The part of the axial load directly transmitted to the lower chord creates a bending moment in the lower chord. As the upper chord is connected to the lower one a failure of the type shown in figure 6 often occurs.

DESIGN METHODS FOR THE HEEL JOINT

As previously mentioned design methods for the heel joint were presented during the CIB/W18-meeting in Otaniemi.

For roof trusses, simplified design methods often are proposed which do not fullfil the equilibrium conditions. Such methods do not reflect the true performance of the truss, but may be accepted provided it is sufficiently proven by testing that they result in a design on the "safe side". Further, as they must be considered as empirical, the results should not be applied outside the range of the tests.

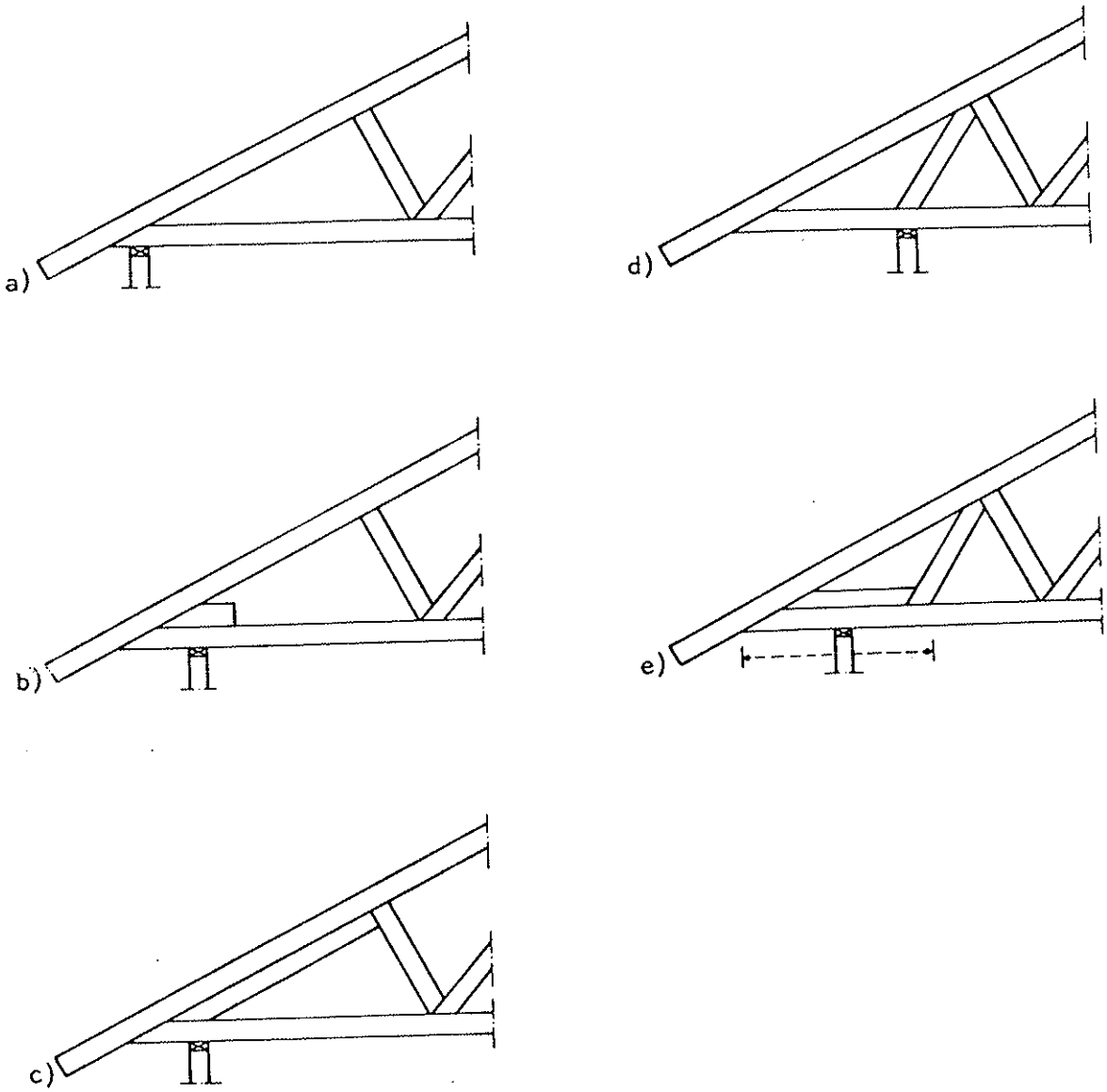

Figure 1. *Different designs of the heel in case of support eccentricity.*

a) No reinforcement

b) Solution with wedge

c) Additional upper chord

d) Additional diagonal brace

e) Additional diagonal and additional lower chord

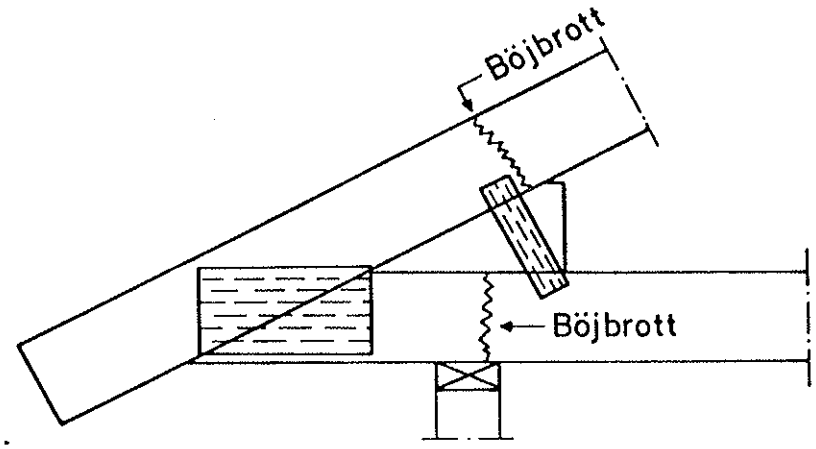

Figure 2. Bending failures in a heel reinforced with a wedge.

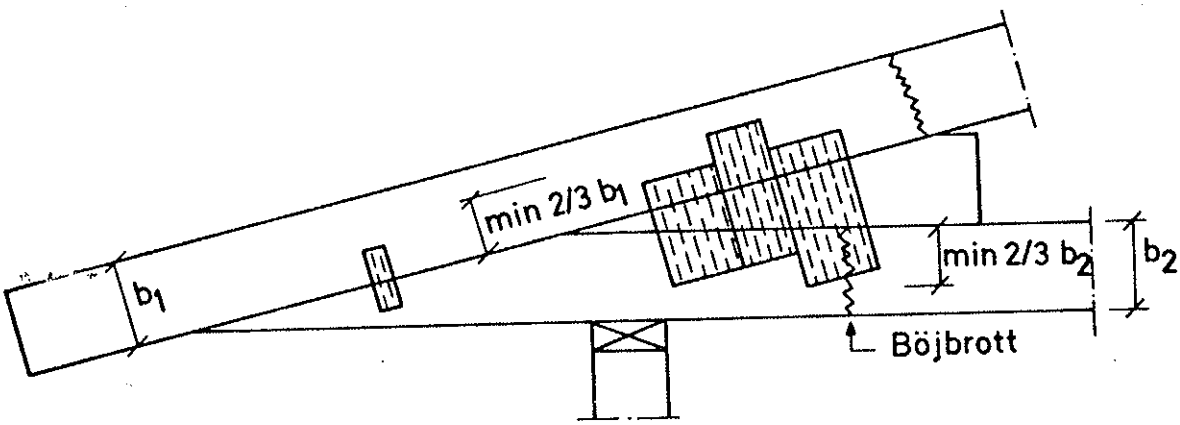

Figure 3. Design of the heel where the force transmission is effected by nail plates which extend from upper to lower chord via the wedge.

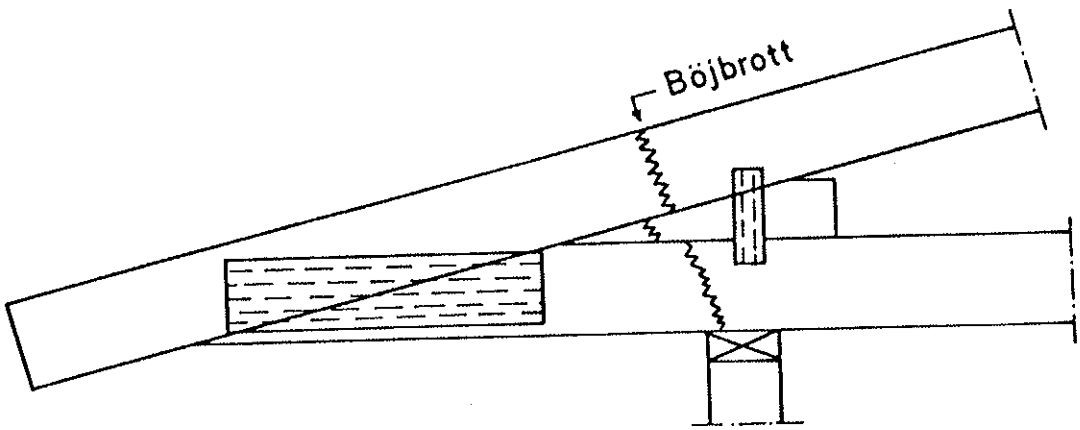

Figure 4. Failure mechanism where the upper chord is broken at the narrow end of the wedge.

BI 4 3000 74 10 KDB

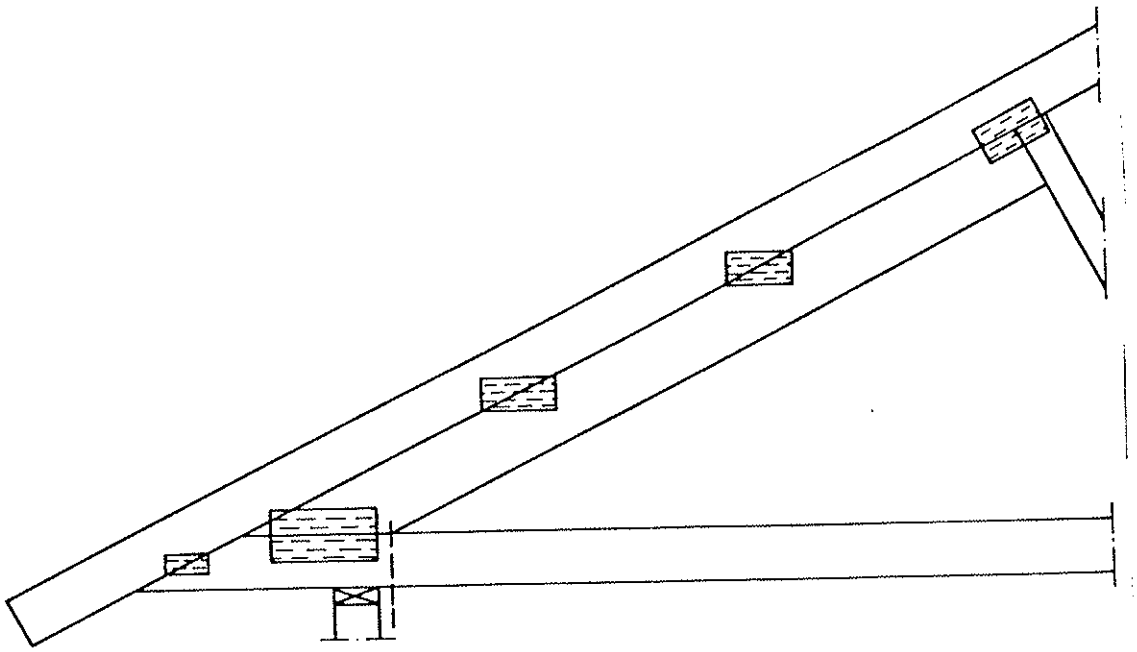

Figure 5. Example of position of nail plates in a truss with an additional upper chord.

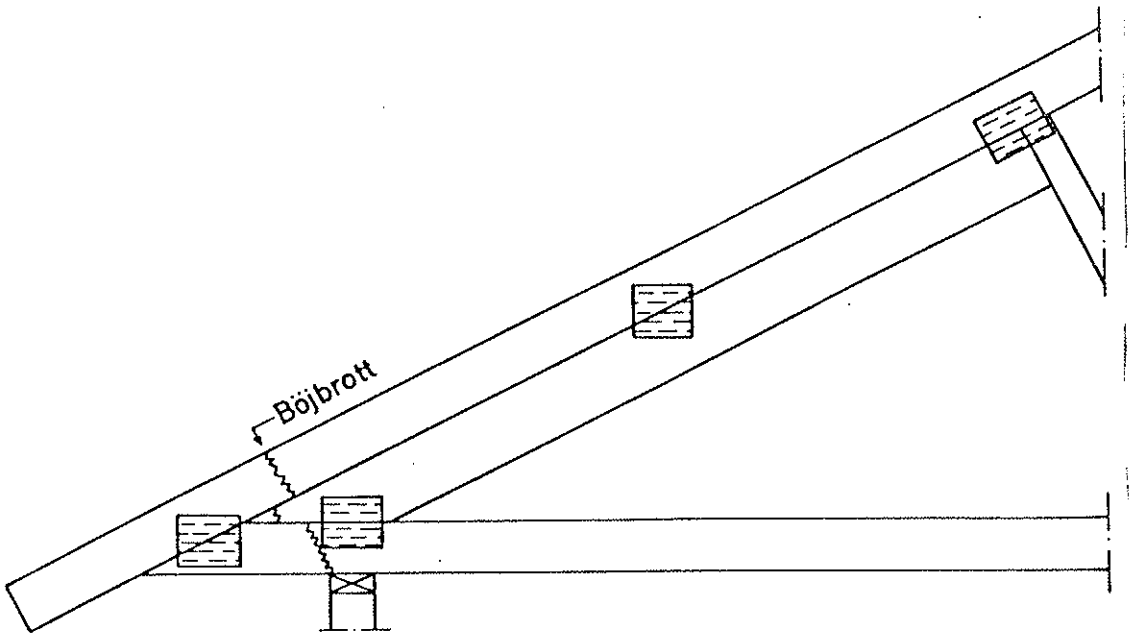

Figure 6. Example of a not very suitable location of nail plates in a truss with an additional upper chord.

CIB-W18/14-7-6

INTERNATIONAL COUNCIL FOR BUILDING RESEARCH STUDIES AND DOCUMENTATION

WORKING COMMISSION W18 - TIMBER STRUCTURES

DERIVATION OF THE ALLOWABLE LOAD IN CASE OF NAIL-PLATE JOINTS PERPENDICULAR TO GRAIN

by

K Möhler

Universität Karlsruhe
FEDERAL REPUBLIC OF GERMANY

WARSAW, POLAND
MAY 1981

Derivation of the allowable load in case of nail plate joints perpendicular to grain

For the design of specimen with nail plates and stresses perpendicular to grain the UEAtc - rules give an embedding length of $a \geqslant 0{,}6\ H$ (H = depth of cross member) for the derivation of the ultimate load, in order to reduce the risk of wood splitting perpendicular to grain.

It proves however, that for nail plates with a steel plate thickness $t \geqslant 1{,}5$ mm failure of joints perpendicular to grain occurs by cracks in the cross member due to stresses perpendicular to grain, primarily along the bottom row of nails.

Taking formula (1), of the current approval of nail plate joints in the Federal Republic of Germany (FRG), the design load, $F_{d\perp}$, is

$$F_{d\perp} = 0{,}13 \cdot b \cdot y_s \quad \text{(kN)} \qquad (1)$$

For the evaluation of tests perpendicular to grain, with different types of nail plates also formula (2), of the current approval of hanger joints in the FRG, was used :

$$F_{d\perp} = 0{,}04 \cdot w \cdot s_w \cdot f\left(\frac{a}{h}\right) \quad \text{(kN)} \qquad (2)$$

Symbols used are shown in Figure 1 (Annex 1). Factor $f\left(\frac{a}{H}\right)$ according to our own tests approximately can be figured as follows:

$$f\left(\frac{a}{H}\right) = \frac{1}{1 - 0{,}93 \cdot \left(\frac{a}{H}\right)}$$ (see Figure 2, Annex 2).

The global safety factors against failure

ν_1 and ν_2 = $\frac{\text{ultimate load, } \bar{F}_u}{F_d\perp(1) \text{ or } F_d\perp(2)}$ are listed in Table 1,

(Annex 3) and plotted over the ratio $\frac{a}{H}$ in Figure 3

(Annex 4). The comparison shows, that the calculation of the design load, $F_d\perp$, according to formula (2) takes into account the real conditions much better than formula (1), in case failure occurs due to stresses perpendicular to grain. Consequently, such joints could take a load higher than allowable according to the current design code in the FRG.

Allowable load in case of failure caused by stresses perpendicular to grain

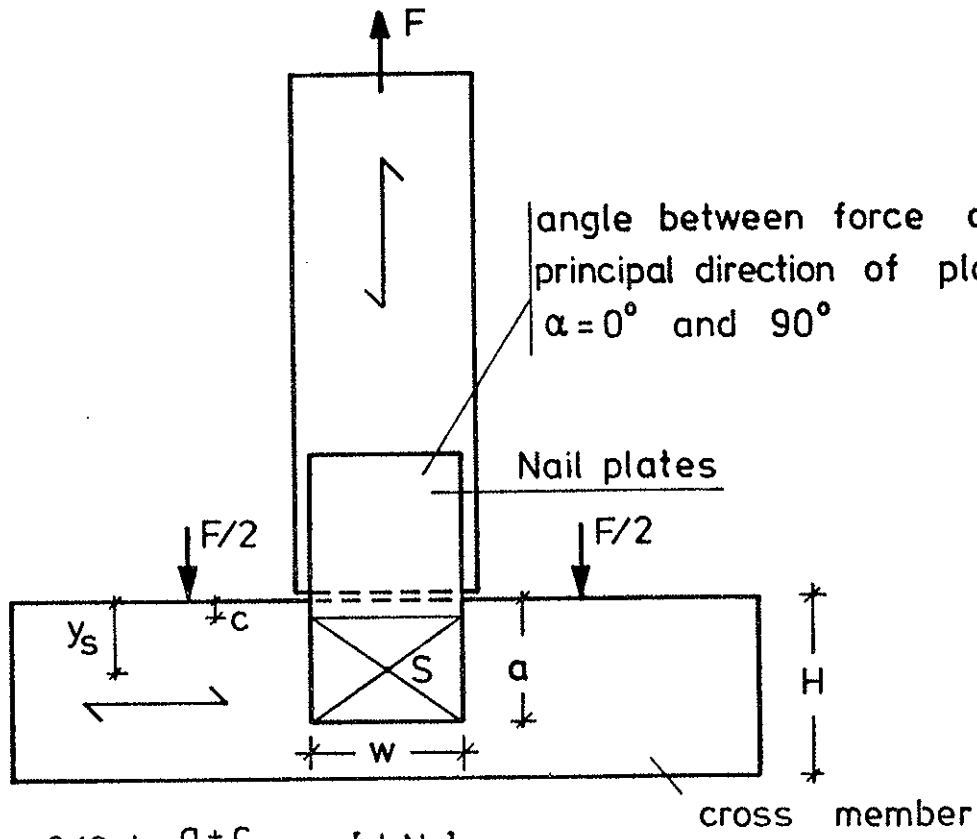

① $F_d\perp = 0{,}13 \cdot b \cdot \underbrace{\frac{a+c}{2}}_{y_s}$ [kN]

② $F_d\perp = 0{,}04 \cdot w \cdot s_w \cdot f(\frac{a}{H})$ [kN] with $\frac{a}{H} \leq 0{,}7$

b = member thickness [cm]

s_w = double nail length [cm]

c = minimum distance of load-bearing nails from loaded edge of cross member ; c = 1 cm

a = embedding length of nail plate in cross member [cm]

H = depth of cross member [cm]

w = width of nail plate [cm]

$$f(\frac{a}{H}) = \frac{1}{1 - 0{,}93(\frac{a}{H})}$$ (see fig. 2)

Figure 1

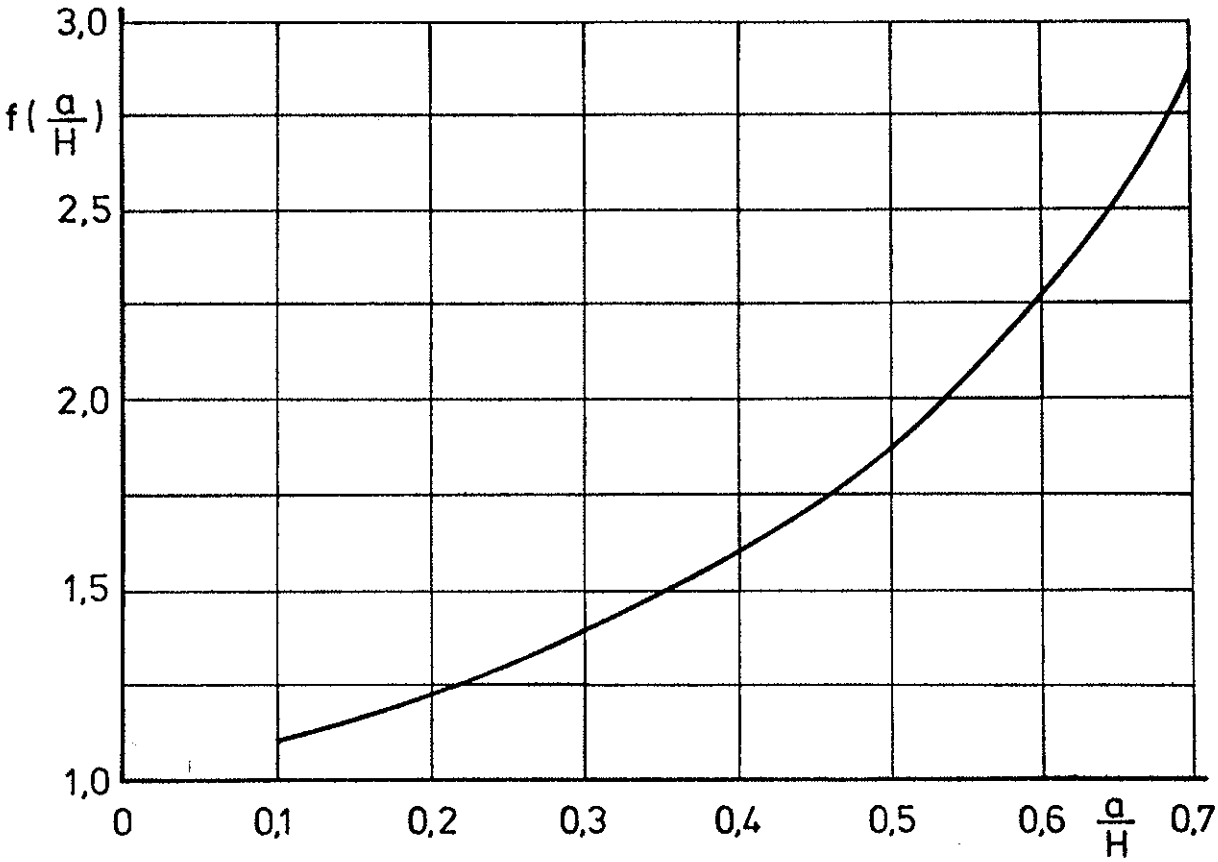

Figure 2 Relation between $f(\frac{a}{H})$ and $\frac{a}{H}$

Table 1 Global safety factors against failure, v_1 and v_2

Type of Nail Plate	α deg	a cm	H cm	ultimate load $\bar{F}_u$ [1] kN	$\frac{\bar{F}_u}{F_d\perp(1)}=v_1$	$\frac{\bar{F}_u}{F_d\perp(2)}=v_2$	$\frac{v_1}{v_2}$
TTS 20	0	4	10	12,8	10,3	8,5	1,2
		8		30,3	13,6	10,6	1,3
1,12 mm	90	4		14,1	11,4	7,7	1,5
		7		29,9	15,1	6,1	2,8
TTS 100	0	5	12	11,3	6,4	4,7	1,4
		8		21,0	8,0	5,4	1,5
2,0 mm	90	5		15,1	8,6	4,6	1,9
		8		30,2	11,5	3,2	3,6
GN 14	0	6,6	16	17,3	7,0	5,9	1,2
1,98 mm	90	6,6		19,4	7,9	7,5	1,1
Wolf 16N	0	5	12	11,2	8,2	5,5	1,5
		8		20,7	10,1	6,3	1,6
1,5 mm	90	5		12,9	9,5	4,3	2,2
		8		21,1	10,3	6,4	1,6
Wolf 15N	0	7	10	19,1	9,2	5,0	1,8
1,5 mm	90	7		28,0	13,5	3,0	4,5
Wolf 20N	0	8	12	20,6	7,7	5,2	1,5
2,0 mm	90	8		30,0	11,2	3,6	3,1
Wolf 25Z	0	10	15	35,3	10,7	6,4	1,7
2,5 mm	90	10		34,4	10,5	3,6	2,9
$\bar{v}_1$ or $\bar{v}_2$	0				9,1	6,4	1,5
$\bar{v}_1$ or $\bar{v}_2$	90				11,0	5,0	2,5

[1] $\bar{F}_u$ represents the mean value of 5 replicates

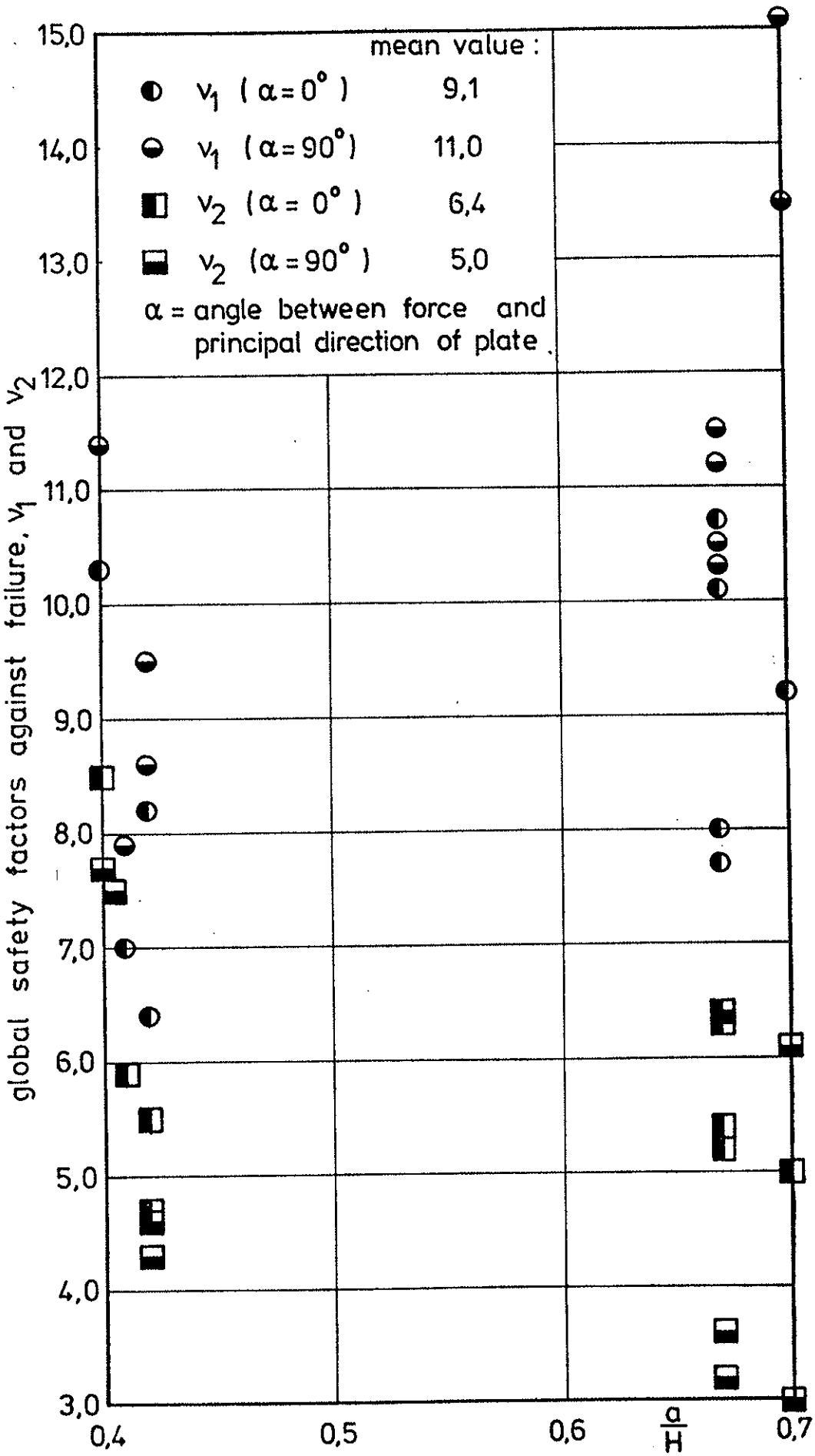

Figure 3 Global safety factors against failure, v_1 and v_2 over $\frac{a}{H}$

CIB-W18/14-7-7

INTERNATIONAL COUNCIL FOR BUILDING RESEARCH STUDIES AND DOCUMENTATION

WORKING COMMISSION W18 - TIMBER STRUCTURES

COMMENTS ON PAPER CIB-W18/14-7-1

by

T A G M van der Put

Stevin Laboratory
THE NETHERLANDS

WARSAW, POLAND
MAY 1981

DELFT UNIVERSITY OF TECHNOLOGY
Department of Civil Engineering
Stevin Laboratory - Ir. T.A.C.M. van der Put

May 1981

Comments on CIB/W18/14-7-1.

Design of Joints with Nail Plates.

2.1. The model for calculation of the joints is based on a determinate loading state with known moment M, normal force $R \sin \alpha_R$ and shear-force $R \cos \alpha_R$. So it is suggested that M, R, α_R can be found from the equilibrium conditions of the whole structure at ultimate state and this is only true if a complete mechanism in the joints is possible. If a "plastic" hinge in the wood is necessary for a mechanism (being the case for trusses), it is not sure that the rotation of the member is sufficient to give the ultimate moment in the adjacent joints and the "displacements requirement" can be $F_t = 0$ (see fig. 1

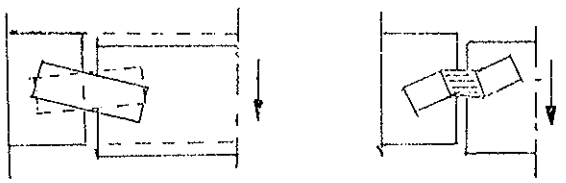

M 0 (symmetry) failure of the plate
failure of teeth

fig. 1 : "Hinge" mechamism

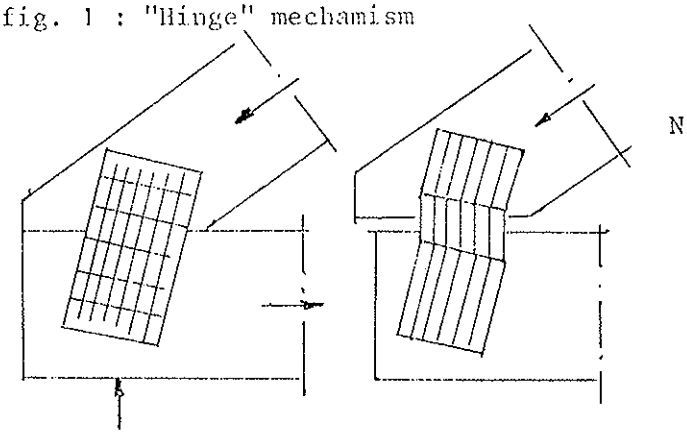

opening movement or (if N is great) buckling of the plates and withdrawal of teeth instead of tension in the plates

fig. 2 : failure of plate forming a hinge

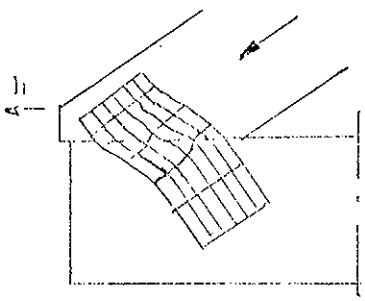

fig. 3

Comments on CIB/W18/14-7-1 (continuation)

and 2) and because of eq. (4) this is not the solution found by eq. (1) to (5). So the most dangerous failure mechanism is excluded. If the plate is placed in the right direction (see fig. 3) the mainly translational movement h (fig. 3) causes the tensile force F_p in the plates and the compression force F_t. However this is a hardening effect due to failure of the plate (or teeth). At first flow, the plate must be able to carry the entire shear component in the joint, especially because there is always an opening possible in the joint by manufacturing and shrinkage (causing e.g. compression in the plates instead of tension; fig 2, -3) (So $\alpha_{XF} = 0$ and $\mu = 0$ in eq. (1) and (2)).

It is not sure that the deformation capacity for member-rotation or plate- or teeth-failure-mechanisms is sufficient to reach the assumed equilibrium state of eq. (1) to (5) in all circumstances, so it is better to base design on a possible, statical determined, worst situation, when the joint acts like a hinge:

$F_t = R \sin\alpha_R$ (compression ... (1a)

$F_p = R$ ($\alpha_{XF} = \alpha_R$; tension) ... (1b); (2b)

$F_{p\alpha} = R \cos\alpha_R$ (if compression: (1a) .... (2a)

$M = Mp = 0$ ... (compression) (3a)

$M = (-\alpha_s) R \sin\alpha_R$ (tension) (3b)

F_p is the ultimate value of the plate - or teeth loading in the given direction and R is immediately known from this strength, applying the equations of 2.2 and 2.3. ($|F_T| \leq \sigma_C B h$ is always satisfied).

Conclusion: The proposed equilibrium system as base of joint design seems to be applicable for statical determinated constructions or indetermined constructions failing by a complete joint mechanism. For trusses it is questionable if the possible deformations are sufficient to reach this "hardened" state.

Department of Civil Engineering
Stevin Laboratory - Ir. T.A.C.M. van der Put

Comments on CIB/W18/14-7-1 (continuation)

2.4.2. Tension $\perp$ fiber direction

The allowed tensile force $\perp$ in the wood is of higher order with respect to the value of the CIB-Timber Code:

$$V \leq \sigma_{t90D}{}^{B} \; (l_{A0} + 2l_{A90} + 95l_{2}) \gtrsim 3 \text{ à } 5 \; \sigma_{t90D}{}^{B} \; l_{A90}$$

instead of $V = \frac{2}{3} \sigma_{t90D}{}^{B} \, l_{A90}$ (CIB value chap. 6, p.5) or

$$V \leq \sigma_{t90D}{}^{B} \; (l_{A0} + 4 \; l_{A90}) \approx 5 \text{ à } 6 \; \sigma_{t90D}{}^{B} \, l_{A90} \quad (\text{I.S.O. } \frac{4}{3} \sigma_{t90D}{}^{B} l_{A90})$$

CIB-W18/14-12-1

INTERNATIONAL COUNCIL FOR BUILDING RESEARCH STUDIES AND DOCUMENTATION

WORKING COMMISSION W18 - TIMBER STRUCTURES

PROPOSALS FOR CEI-BOIS/CIB-W18 GLULAM STANDARDS

by

H. J. Larsen

Aalborg University Centre

DENMARK

WARSAW, POLAND
MAY 1981

CEI-BOIS/CIB-W18 RECOMMENDED STANDARD

MANUFACTURE OF GLUED LAMINATED TIMBER STRUCTURAL MEMBERS

1. Draft, December 1980

1. SCOPE

This standard specifies general requirements for the production of glued laminated timber structural members made from conifer or similar woods. It also gives the general control rules.

The standard only applies to a lamination thickness of 45 mm or less. A minimum of 4 laminations is assumed.

It is assumed that the boards forming the laminations are full-strength end-jointed.

Some national rules limit the thickness of the laminations further.

The general rules will have to be supplemented to take into consideration special production conditions, materials or functional requirements.

The standard does not deal with the requirements made by building authorities or others for approval of the production.

As examples requirements for the personnel can be mentioned, including claims of a responsible works manager, claims that the firm should be subject to external control, and claims regarding protection of the environment.

2. REFERENCES

CIB, 1980:	CIB-Structural Timber Design Code, 5. edition.
BS 1444	British Standard. Cold-setting Casein glue for wood.
BS 1204	British Standard. Synthetic resin adhesives (phenolic and amino-plastic) for wood. Part 1. Gap-filling adhesives.
DIN xxxx AFNOR yyyy	Standards for glue and testing of glue.
CEI-BOIS/CIB-W18, I	Test Standard I. Glued timber structures - Determination of block shear strength.
CEI-BOIS/CIB-W18, II	Test Standard II. Glued timber structures - Delamination test.
CEI-BOIS/CIB-W18, III	Test Standard III. Glued timber structures - Bending strength of finger joints.

3. DEFINITIONS

The definitions in [CIB, 1980] apply, together with the following.

Glued laminated timber: A component manufactured from separate pieces of timber arranged in laminations parallel to the axis of the member, the individual pieces being assembled with the grain approximately parallel, and glued together to form a member which functions as a single structural unit.

Lamination: A layer of wood in a laminated member. The lamination may be formed from several boards, end or side jointed or both so as to extend to the full width and length of the member.

4. PREMISES AND EQUIPMENT

4.1 Premises

Glued timber structures should be manufactured in suitable rooms fulfilling the requirements in this and the following paragraphs.

The temperature in the store rooms, gluing rooms and rooms used for curing should at least be 15°C. During curing of the glue higher temperature is normally required, see 6.4.5.

It should be possible to adjust the humidity in store rooms, gluing rooms and curing chambers so that the requirements in 6.1.3 are satisfied.

There should be a separate area (glue section) for storing and mixing glue and hardener. There should be direct access to water and wash-basin for cleaning the gluing equipment.

The claim of a separate glue section is of course eliminated if for example glue and hardener are pumped directly from storage tanks and mixed in the application.

4.2 Equipment

The following should be available:

4.2.1. Equipment to continuously register the temperature and humidity (thermohygrograph) in store rooms, gluing rooms and curing rooms.

4.2.2. Equipment to measure the moisture content of the wood.

4.2.3. Equipment to measure the lamination thickness within an accuracy of 0.02 mm.

4.2.4. Mixing equipment and weight or other sufficiently adequate equipment for dosing glue and hardener.

4.2.5. Equipment for uniform application of the required quantity of glue.

4.2.6. Equipment ensuring the required glue line pressure, temperature and humidity during the curing of the glue.

4.2.7. Equipment to test the strength of the joints in the laminations.

4.2.8. Equipment for shear- and delamination tests as required in 7.5.

5. MATERIALS

5.1 Timber

5.1.1. The timber quality and its treatment against rot, etc. should be in accordance with the consumer's requirements and current standards for design, grading and impregnation.

5.1.2. The finished thickness of any lamination shall not exceed 45 mm. For curved work the thickness is in addition governed by the requirements of the design, the curvature and the species used, and it shall not exceed

$0.01R$	for	$R \leqslant 1000$ mm	and
$0.006R + 4$ mm	for	$R \geqslant 1000$ mm	

R is the minimum radius of curvature.

5.1.3. The moisture content of the laminations at the time of gluing shall be chosen with regard to the moisture content likely to be attained at service and in the range of 0.08 - 0.16. The range of the moisture content of all the laminations assembled into a single member shall not be greater than 0.05.

5.2 Adhesives

5.2.1. The adhesives shall comply with the requirements in [CIB, 1980] and relevant national codes. If treated wood is used the adhesive should be tested in combination with the treatment.

5.2.2. The type of adhesive should be chosen with regard to the climatic conditions in service, the timber species and the production methods. The properties of the most relevant types of adhesives are briefly described below. In all cases an assurance should besought from the manufacturer that a particular formulation is suitable for the service conditions and for the length of life envisaged for the structure.

5.2.3. Casein adhesives are generally suitable for structures in moisture class 1. They shall comply with e.g. BS 1444: Type A, DIN xxxx, AFNOR yyyy.

5.2.4. Urea-formaldehyde adhesives are generally suited for structures in moisture class 1 and provided the temperature of the glue line does not exceed 50°C also for moisture class 2. They shall comply with e.g. BS 1204, part 1: Type MR, DIN xxxx, AFNOR yyyy.

5.2.5. Resorcinol and phenol-resorcinol adhesives are generally suitable for all moisture classes. They shall comply with e.g. BS 1204, part 1: Type WBP, DIN xxxx, AFNOR yyyy.

Cold-setting phenol adhesives are generally not suitable and expecially not for service conditions of high temperature and high humidity.

6. MANUFACTURE

6.1 Edge joints

Where a lamination consists of several boards side by side the edge joints should be glued in advance in the extreme lamination on either side, and furthermore, the edge joints in two neighbouring laminations should be staggered laterally by at least the lamination thickness.

6.2 End joints

6.2.1. The individual laminations should be jointed to the final length before planing.

6.2.2. Joints in the extreme laminations on either side should be spaced at least 1.5 m. Besides, the joints may be placed arbitrarily provided production methods systematically accumulating joints in a section are avoided.

6.2.3. The characteristic tensile strength of the joints should at least correspond to that required of the timber grade in question.

For finger joints the requirement can be assumed satisfied if the characteristic bending strength, determined according to section 7.4, is at least 1.3 times that required of the timber grade in question, provided the distance from the finger root to knots with a diameter exceeding 6 mm is at least 3 times the knot diameter or 100 mm and provided there are no serious fibre disturbances in the fingers (e.g. due to a cut-off knot).

6.3 Laminations

6.3.1. Planing. Prior to gluing, laminations shall be planed, the knives being sharp enough and the pressure such as to provide a cleanly cut surface without compressing or otherwise damaging the fibres. Laminations showing hit and miss planing shall be rejected.

This planing shall be carried out not more than 24 hours before gluing, unless the species and the storage environment are such that the development of any condition on the surface of the members, which would reduce the maximum bond strength on the glue line, will not take place; in the case of timbers that are difficult to glue, planing shall be carried out immediately before gluing. The depth of cutter marks shall not exceed 0.03 mm. The thickness of a planed lamination shall at no point deviate more than 0.2 mm from the mean thickness. For a lamination consisting of several boards side by side the requirement applies to the entire lamination.

6.3.2. Cleanliness. At the time of gluing the surfaces of laminations shall be clean and free from oil, dust, excessive natural resin and any substance which may affect the production of maximum glue line strength. In particular, if any laminations show signs of having previously been in contact with an adhesive, the adhesive shall be removed by planing after it has set, or the lamination shall be discarded.

6.3.3. Cupping. Just prior to gluing the amount of cup in a lamination, measured as the greatest distance from one face to a plane containing the arrises of that face, shall not exceed the allowance given in Table 1. It is permitted to remove the cupping by split-sawing with a depth of up to 2/3 of the lamination thickness.

Table 1. Maximum cup in mm

Finished thickness, t, mm	Width	
	up to 150 mm	over 150 mm
$t < 17$	1,5	1,5
$17 \leqslant t < 30$	1,0	1,5
$30 \leqslant t$	0,5	1,0

6.4 Gluing

6.4.1. Cleanliness. The glue spreaders, mixing equipment, containers and other equipment shall be kept clean at all times and free from contaminating substances. In particular, traces of old adhesive shall be removed.

6.4.2. Use of adhesive. Taking account of the purpose of the member and the species of timber, the written advice of the manufacturer of the adhesive shall be sought and followed with respect to the following:

1) mixing,
2) spreading,
3) open and closed assembly times,
4) curing temperature,
5) curing, cramping and conditioning times.

6.4.3. Cramping. Any cramping arrangement shall be such that the pressure is uniform over the glue line. The pressure shall be applied in such a manner that the adhesive forms a continuous film.

6.4.4. Pressure. The pressure shall be that specified in the adhesive manufacturer's written instructions for the adhesive used, but in no case shall it be less than 0.6 N/mm² for laminations under 35 mm and 1.0 N/mm² for thicker laminations. The application of pressure at a suitable temperature shall be completed within the closed assembly time, when a continuous »squeeze out» or »bead» along the the edge of each glue line shall be produced.

The pressure shall be checked about 15 min. after initial cramping to ensure that there has been no reduction.

6.4.5. Temperature. The curing temperature should be at least 20°C. For structures for use in moisture class 3 the temperature in the curing room should be 40°C for at least 5 hours.

6.4.6. Conditioning. The structures must not be further worked up until the glue joints have adequate strength and they should be cured to the prescribed strength before delivery, unless it is verified that the structure will not be loaded until the curing is adequate.

Casein glued structures must not be exposed to temperatures lower than 15°C until at least 24 hours after they have been released from pressure. For resorcinol-phenol glued structures the time is 72 hours.

7. CONTROL

7.1 Moisture content of the laminations

The moisture content should be measured in all and shall be measured in 5 per cent of the individual boards. Measuring can be made with an electric moisturemeter calibrated for the relevant species and impregnation method by the weigh-dry-weigh method, which shall be used for regular control of the meter. Measurements shall be taken at least 600 mm from the ends of the laminations. If possible half of the measurements should be taken in the surface of the laminations and half in mid depth.

7.2 Planing of the laminations

The lamination thicknesses and the quality of the planing shall be controlled regularly.

7.3 Glue

The glue spread should be controlled regularly. By automatic or semi-automatic glue mixing equipment the composition of the mixed glue should likewise be checked.

7.4 End joints

7.4.1. From each work-shift and each production line at least 3 joints shall be tested in accordance with CEI-BOIS/CIB-W18, Test standard III.

7.4.2. The requirement of 6.2.3 can be assumed satisfied if

a) no test result in a test series of at least 15 specimens is below the required strength, or

b) the characteristic strength of the test series (which might comprise less than 15 specimens) is at least equal to the required strength.

7.5 Glue joints

7.5.1. Samples of each delivery and of at least every fifth production should be taken for control. If all tests for a three-month period satisfy the requirements the number of samples can be reduced by half. In special cases the number can be further reduced.

7.5.2. If there is reason to suspect that the gluing of a structure is not fully successful samples must be taken independently of the provisions in 7.5.1.

7.5.3. Shear tests should be made in conformity with CEI-BOIS/CIB-W18, Test standard I. The extreme glue lines and the middle line are tested. The testing may be omitted provided delamination tests are made in conformity with 7.5.4. The shear strength of the glue joint should be at least twice the assumed characteristic shear strength of the structure. Lower values can be tolerated if the percentage of wood failure in the glued joint in question is at least 90.

7.5.4. For structures for moisture class 3 delamination tests in conformity with CEI-BOIS/CIB-W18, Test standard II should be made. In the evaluation edge gluings and glue joints in finger joints are disregarded. The test is approved if the delamination percentage after the normal test cycle (8 days) is not above 5. If the percentage is above 5 but below 10, an extra half test cycle (4 days) is carried out with the same test specimen, whereupon the delamination percentage must not exceed 10.

8. GLUING JOURNAL

The producer must keep a gluing joirnal giving information of among other things:

a) Date and number of production.

b) Dimensions of the structure, lamination thickness, number of laminations, timber grade and treatment, if any, cf. 5.1.

c) Conditioning of the materials and the moisture content measured, cf. 5.1.3.

e) Planing and the time between planing and application of glue, cf. 6.3.

f) Glue, glue quantity per m^2 and time of start and end of application of glue, cf. 6.4.

g) Pressure, tightening up, if any, curing temperature and -time and humidity during curing, cf. 6.4.

h) Additional curing, if any, cf. 6.4.6.

i) Result of tests in conformity with 7.4 - 7.6.

The journal may be in the form of production sheets, registration forms, thermohygrograph tape, etc.

9. DELIVERY AND MARKING

9.1 Marking

Each glulam member must be marked with the name of the producer and production number. If the member cannot be used in moisture class 3 it must appear from the marking, and if there are more strength classes the strength class must likewise appear from the marking.

9.2 Information

The producer should give the customer the necessary information of the proper treatment of the structures.

1. SCOPE

This standard gives two test methods for the determination of the shear strength of glue joints in wood and wood-based panels.

Method B is aimed at the situation where the test specimens have to be taken from structures without damaging them essentially. Method A should be used in all other cases.

(2. DEFINITION)

3. APPARATUS

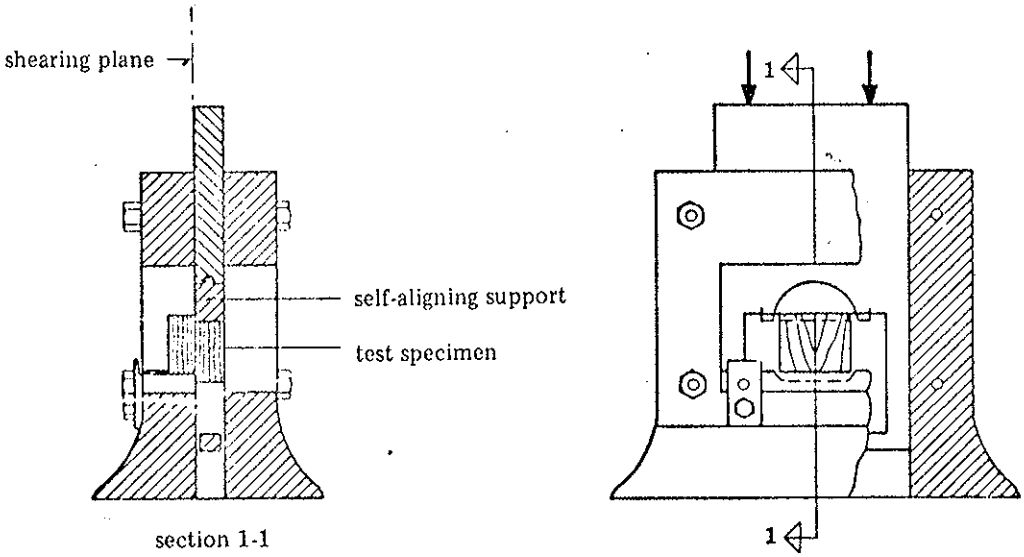

Figure 3a. Shearing tool for test method A and B.

A testing machine capable of measuring load with an accuracy of ± 1 per cent.

A shearing tool as shown in figure 3.

For method B further two adapters as shown in figure 3b are required.

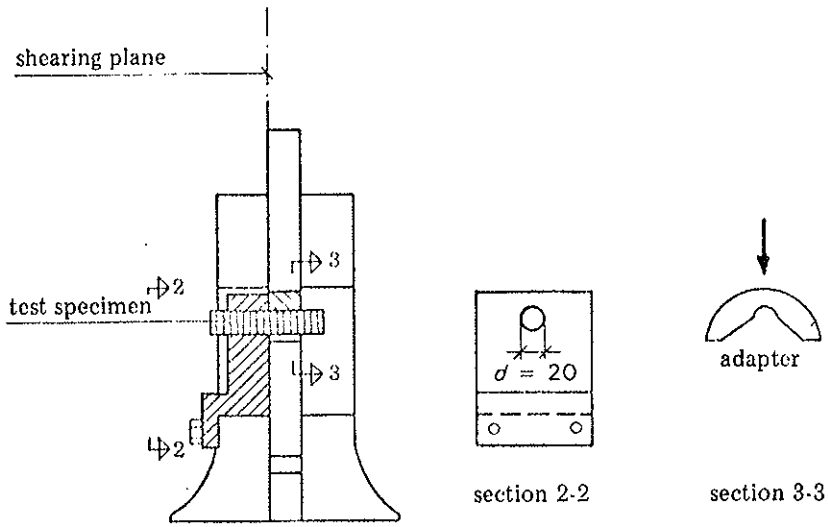

Figure 3b. Shearing tool and adapters for test method B.

4. TEST SPECIMENS

4.1 Method A

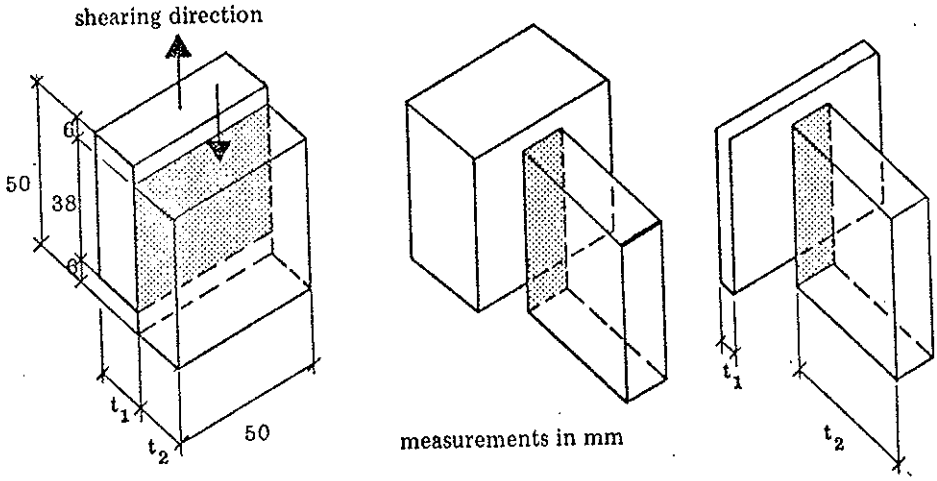

Figure 4a. Specimens for test method A*).

The specimens shall be cut as shown in figure 4a.

If possible the thicknesses t_1 and t_2 should be at least 20 mm. Care shall be taken in preparing the test specimens to make the loaded surfaces smooth and parallel to each other and perpendicular to the height.

Unless otherwise prescribed the direction of loading during test should be parallel to the grain direction of one or both timber pieces and to the plane of one or both panels.

---

*) Alternative specimens

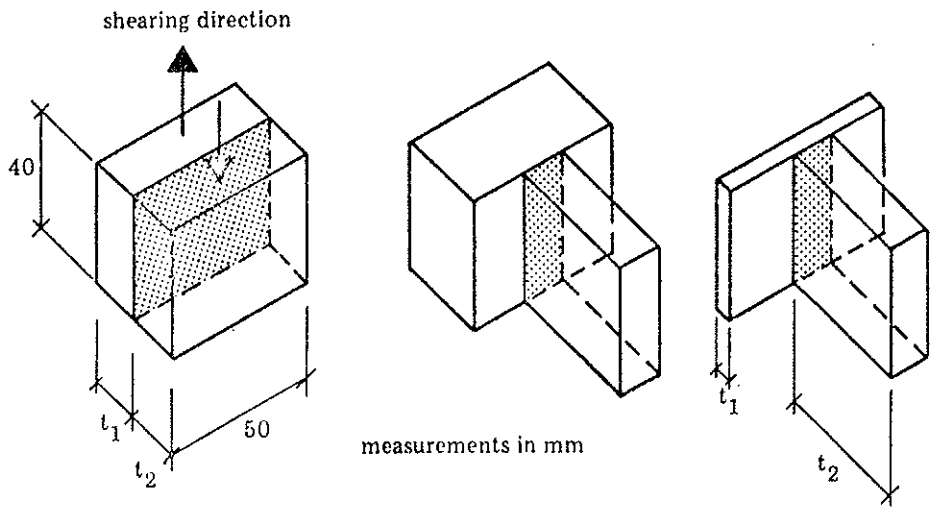

4.2 Method B

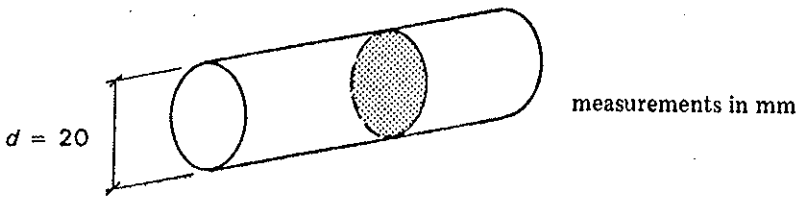

Figure 4b. Specimens for test method B.

Cylinders with a diameter of 20 mm are bored perpendicular to the glue line, see figure 4b. If possible, the length on both sides of the glue line should be at least 20 mm.

4.3 Moisture content

The moisture content of the test specimens at testing shall correspond to a temperature of (23 ± 2)°C and a relative moisture content of (50 ± 5)% (corresponding to climate 23/50 according to ISO 554).

If the test specimens are produced with a deviating moisture content moisture changes should be made slowly and in such a manner that splitting or other damages are avoided.

5. PROCEDURE

Measure the dimensions of the shearing area to the nearest 0.5 mm. Place the specimens in the shearing tool (for test method B with the adapters) with the glue line along the shearing plane.

Load the movable part with a continuous rate of deformation of (0.4 ± 0.1) mm/min until failure.

6. RESULTS AND REPORT

The shear strength in MPa (the shear stress at failure) shall be calculated as P/A. P is the failure load in N and A the tested glue line area in mm^2.

The shear strength shall be recorded with two significant figures together with the percentage of wood failure, rounded off to the nearest figure divisible by 5.

1. SCOPE

This standard is intended to afford a means of evaluation of the resistance to delamination of glued laminated wood structures intended for exterior service.

2. DEFINITION

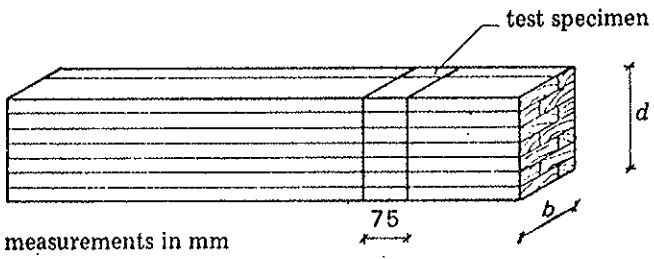

Figure 1.

Glued laminated wood is manufactured by gluing together two or more laminations, all with the grain essentially parallel, to form a member which functions as a single structural unit. The individual laminations may themselves be made up of two or more pieces both in width and in length. Reference is made to figure 1.

3. APPARATUS

A pressure vessel designed to safely withstand pressures of at least p*) MPa and a vacuum of at least 0.08 MPa, and equipped with pumps capable of giving a pressure of at least p*) MPa and of drawing a vacuum of 0.07 - 0.08 MPa.

A drying duct where air at a temperature of 25 - 30°C and a relative humidity of 25 - 30 per cent is circulating at a velocity of V*) m/s.

4. TEST SPECIMENS

The test specimen shall consist of a full cross-section of the member to be tested prepared by cutting the wood perpendicular to the grain, and shall be 75 mm long. The end-grain surfaces shall be cut with a sharp saw or other tool that produces a smooth surface.

If the width b (figure 1) is greater than 300 mm the specimen may be split into two or more specimens each at least 150 mm wide. If the depth d (figure 1) is greater than 1500 mm the specimen(s) may be cut into two or more specimens each at least 750 mm deep.

5. PROCEDURE

Measure to the nearest mm the total length of glue on the end-grain surfaces of the specimens.

Place the specimens in the pressure vessel, immerse them in water at a temperature of 18 - 27°C and weigh them down. Support the specimens in such a manner that all end grain-surfaces are exposed to the water.

---

*) See comments.

Draw a vacuum of 0.07 - 0.08 MPa and hold it for t_1 *) h. Release the vacuum and apply a pressure of p*) MPa and hold it for t_2 *) h. Repeat this vacuum pressure cycle.

Remove the specimen from the pressure vessel and dry it in the drying duct for a period of t_3 *) h. During the drying the specimens shall be placed with the end-grain surfaces parallel to the stream of air and with free distances of at least 50 mm.

Repeat the entire soaking-drying cycle once.

At the end of the drying period measure to the nearest mm the length of open glue line on the end grain surfaces of the specimens. Do not include glue lines at knots.

Repeat if required the soaking-drying cycle once, and measure again the length of open glue line.

6. CALCULATION AND REPORT

Express the total length of open glue line on the end-grain surfaces of each specimen as a percentage of the entire length of the glue lines on those surfaces.

Report this value as the percentage delamination of the specimen.

Express for each specimen the total length of open glue line in a single glue line as a percentage of the width of the specimen.

Report this value as the maximum percentage delamination for a single glue line of the specimen.

If an extra soaking-drying cycle is performed the results are given before and after the extra cycle.

★ ★ ★

*) COMMENTS

The procedure is essentially the same as described in Appendix C to British Standard BS 4169:1970 and American Society for Testing of Material, ASTM D905-49, if the following values are used:

		BS 4169:1970	ASTM D905-49
Soaking pressure	p, MPa	0.5 ± 0.03	1.0 ± 0.03
Vacuum time	t_1, h	1.5	0.25
Pressure time	t_2, h	1.5	2.0
Drying time	t_3, h	88	91.5
Time for one cycle	h	9494	96 96
Air velocity	V, m/s	1.0 - 1.5	2.5 ± 0.25

CIB-W18/14-12-2

INTERNATIONAL COUNCIL FOR BUILDING RESEARCH STUDIES AND DOCUMENTATION

WORKING COMMISSION W18 - TIMBER STRUCTURES

Guidelines for the Manufacturing of Glued Load-bearing Timber Structures

Stevin Laboratory
Delft

WARSAW, POLAND
MAY 1981

TECHNISCHE HOGESCHOOL DELFT

AFDELING DER CIVIELE TECHNIEK

Rapport 4 - 81 - 3 - LV - 1

Guidelines for the manufacturing of glued load-bearing timber structures.

Draft NPR 7070 - General part

Draft NPR 7071 - Glued laminated timber

KOMO-Committee E 83.

Drafts reporter: Ing. G.N. Ruysch, FPL-lab. TNO.

Summary and translation for CIB-W18 Warsaw 1981 by: Prof. ir. J. Kuipers.

januari 1981 Prof. ir. J. Kuipers.

STEVIN-LABORATORIUM

HOUTCONSTRUCTIES

STEVIN-LABORATORIUM
van de Afdeling der
Civiele Techniek
der
TECHNISCHE HOGESCHOOL DELFT

Rapport 4 - 81 - 3 - LV - 1
Guidelines for the manufacturing of
glued load-bearing timber structures.
Draft NPR 7070 - General part
Draft NPR 7071 - Glued laminated timber
KOMO-Committee E 83.
Drafts reporter: Ing. G.N. Ruysch,
FPL-lab. TNO.
Summary and translation for CIB-W18
Warsaw 1981 by: Prof. ir. J. Kuipers.

januari 1981 Prof. ir. J. Kuipers.

Stevinweg 4
2628 CN Delft
telefoon 015-785721

Guide lines for the manufacturing of glued load bearing timber structures.

General Part

(Shortened translation of draft NPR 7070)

- Introduction
- Related codes and standards

1. Scope and field of application.

   The Manufacturing Standard gives recommendations about personnal and equipment of plants as well as general rules for quality and treatment of materials.

2. Deviations from the recommendations.

   Must be accepted by the authorities.

3. Definitions.

4. Expertise.

   Expert personnal must be available at the plant. In any case following functions must be fulfilled during working time:
   technical leader
   grader
   quality-controller.

5. Organisation and working methods.

5.1. Storage of materials.

   Quality and durability of all materials must be maintained.

5.1.1. Timber.

   Careful stacking required so that $\omega < 21\%$.

5.1.2. Sheet materials.

   Store in well-ventilated rooms; beware of deformations.

5.1.3. Glue.

   - system "first in - first out".
   - air temperature 10 - 20 C.
   - glue in barrels, with catalists, etc., must be stored in separate rooms. Data on barrels etc. must be visible.
   - a main tank for glue-in-bulk may not be filled up when not empty.

5.1.4. Other materials.

   Must be stored orderly.

5.2. Data of products.

5.2.1. Technical specifications.

Technical specifications must be available for every series of production, containing:

- form, dimensions, tolerances;
- timber species and grade(s);
- limits of air humidity for the product in use;
- limits of moisture content at fabrication;
- type of glue;
- production number;
- surface treatment, preservation, fireretardant;
- event. sheet materials, isolation, metal parts.

5.2.2. The technical specifications must be given to the client.

5.3. Preparation of timber.

- event. treatments with water soluble preservations or fire-retardants must be done before drying of the timber;
- timber must be dried to one of the following classes:

  8 ± 2%

  11 ± 2%

  14 ± 2%

  dependent on expected climate class in the use-situation;
- timber must be graded before spreading of glue.

6. Materials.

6.1. Timber.

6.1.1. General.

The timber must be suitable for use in glued load bearing structures, so:

- durable glued joints can be made with it;
- values of mechanical properties to be used in design and calculations must be available;
- it must be deliverable in constant quantity and quality.

6.1.2. Durability and climate-in-use.

Table 1 Relationship climate in use classes and manufacturing moisture content ω.

Climate-in-use-class		indications			Moist. cont. of timber at fabrication
		sunshine and rain	air moist. cont.	air temp.	
1	very dry indoors	-	<30	<25	8 ± 2
2	normal	-	30-85	<25	11 ± 2
3	outdoors, under shelter	-	30-100	1)	14 ± 2
4	humid indoors	-	>85	1)	14 ± 2
5	outdoors, unsheltered	+	30-100	1)	14 ± 2
6	hot, indoors	-	<70	>25	8 ± 2 - 11 ± 2

1) not defined

\+ influenced by sunshine and rain

\- not influenced by sunshine and rain

All boundary values are indicative.

Table 2 Relationship climate-in-use-classes and durability classes of wood.

Climate-in-use-class	Durability-class according to KVH				
	I	II	III	IV	V
1	x	x	x	x	0
2	x	x	x	x	0
3	x	x	x	x	0
4	x	x	0	0	-
5	x	x	0	0	-
6	x	x	x	x	0

x = applicable

0 = applicable after preservation

\- = not applicable

6.1.3. Preservation.

If attack by fungi or insects must not be feared timber from durability classes III and IV may be used; class V is only possible when preserved.

If such attack must be expected classes I or II must be used or timber of classes III or IV must be preserved.

6.1.4. Moisture content at fabrication.

See table 1.

6.2. Glue.

6.2.1. General.

General remarks about glue-mix, instructions of glue-manufacturers, etc..

6.2.2. Quality (class) of glue and climate classes.

Table 3

Climate-in-use-class	Ext. 1	Ext. 2	Int. 1
1	x	x	x
2	x	x	x
3	x	x	-
4	x	-	-
5	x	-	-
6	x	x	-

x = applicable
- = not applicable

Note: acceptable glues

RF
PF
MF
UF
CS

and in combinations

6.3. Plywood.

6.3.1. General.

Plywood must be suitable for use in load-bearing structures, so

- durable glued joints can be made;
- values of mechanical properties available;
- deliverable in constant quantity and quality.

6.3.2. Durability and climate-in-use.

Table 4 Climate-in-use classes and quality of glue lines.

Climate-in-use-class	Exterior		Interior
	1	2	1
1	x	x	x
2	x	x	x
3	x	x	-
4	x	1)	-
5	1)	1)	-
6	x	x	-

x = applicable

- = not applicable

1) = only in limitated circumstances can plywood be used in these classes. In any case both glue and wood-species must be in line with the climate-class.

6.4. Hardboard and particle board.

6.4.1. General.

Materials must be suitable for this use; see 6.1.1. and 6.3.1. In main structural parts only hardboard of quality "extra hard" may be used.

6.4.2. Quality and climate-in-use.

Table 5

		Hardboard according to NEN 2122		Particle board according to brochure 78-4	
		extra hard	hard	class N	class V
climate-in-use class	1	+	+	+	+
	2	+	+	+	+
	3	+	-	-	+
	4	+	-	-	0
	5	+	-	-	-
	6	+	+	-	+

+ = applicable

0 = applicable however preserved according to NEN 3251 or NEN 3298

- = not applicable.

6.5. Surface treatments.

Structural parts must be protected against climatical attack during the building time.

Means must give a sufficient protection during about 6 months.

6.6. Preservations.

Must meet different requirements.

6.7. Fire retardants.

Must meet different requirements.

7. Marking.

All produced elements must carry a mark with date of production, climate-in-use-class, manufacturer, and reference to the technical specification.

8. Internal quality control.

Internal quality control must be taking place and all relevant data must be processed and registrated.

Guide line for the manufacturing of glued loadbearing timber structures.

Glued laminated timber

(Shortened translation of draft NPR 7071)

- Introduction
- Related Codes and Standards

1. Scope and field of application.

The manufacturing standard gives guidelines for materials and equipment as well as procedures for the manufacturing of glued laminated timber, mainly for such timber made of European softwoods.

This NPR must be used together with NPR 7070.

2. Definitions.

3. General.

With respect to personnal's expertise and equipment of manufacturing plants follow NPR 7070.

4. Materials.

4.1. Timber.

4.1.1. Grades.

Timber grades following NEN 3180.

4.1.2. Thickness of lamellas.

- straight beams: $t \leq 40$ mm, max. area 7000 mm^2;
- curved members:

$$R \geq 200\ t;$$

$$200\ t > R \geq 150\ t: \quad t < 10\ \text{mm} + 0{,}4\ \left(\frac{R}{t} - 150\right)$$

In special cases a smaller radius is possible but must be considered by the authorities.

4.2. Other materials.

See NPR 7070.

5. Conditions of manufacturing.

General remarks about equipment, dust prevention, surface temperature of the wood ($\geq 15^0$ C), climate during glueing ($15\text{-}25^0$ C and 40 - 75% Rel Hum).

6. Equipment.

Summing up of the necessary equipment, like a kiln, heating furnace, (finger) joint equipment, planing machines, glue spreader, etc..

7. Procedure.

7.1. Grading.

7.1.1. Grading following NEN 3180.

7.1.2. Gradingrules must be fulfilled after resawing (eventually of a built-up member!).

7.1.3. Use of more than one grade in a member.

7.2. Moisture content.

See NPR 7070

7.3. Jointing of lamellas.

See NPR 7070 for fingerjoints.

7.4. Further machining of lamellas.

Further machining is only allowed after sufficient curing of the glue, e.g. by high-frequency or a rest-period of at least 7 hours.

7.5. Planing or sandpaper(?)

This machining must be done on two sides; the thickness-tolerance is 0,2 mm within a lamella.

7.6. Gluespreading.

Spreading of glue should be shortly after machining, with non-resinous softwood within 24 hours. Impregnated timber should be glued within 6 hours after planing. At least 400 g (or 450 g?) must be used per m^2 lamella-joint. (With high frequency curing this amount must be adjusted.)

7.7. Transport.

Transport of lamellas without damage.

7.8. Build-up.

7.8.1. General.

The building-up of structural parts must take place smooth and quickly without interruptions.

7.8.2. Joints.

- distance between joints in adjacent lamellas $\geq$ 10 t.
- over total length of 10 t only one joint in 4 lamellas.

7.8.3. Vertical glue lines between lamellas:

$$d \geq 3/2\ t$$

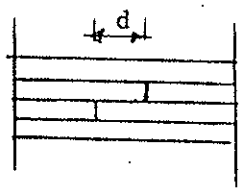

7.9. Curing.

General requirements for pressure time.

7.10. Transport.

7.11. Machining.

7.12. Finishing.

Three classes are introduced dependent on the tolerances, appearance, etc..

8. Production- and laboratory controls.

8.1. General.

8.2. Production control

on: timber species & grade & moist. content
circumstances during manufacturing
jointing, planing, etc.
glue and glue spreading
building-up of components
finishing
marks.

8.3. Laboratory control

on: seasoning
control of equipment (moisture measure, hygrometer, etc.)
control of bending strength of joints
control of delamination.

CIB-W18/14-12-3

INTERNATIONAL COUNCIL FOR BUILDING RESEARCH

STUDIES AND DOCUMENTATION

WORKING COMMISSION W18 - TIMBER STRUCTURES

DOUBLE TAPERED CURVED GLULAM BEAMS

by

H. Riberholt

Department of Structural Engineering
Technical University of Denmark

WARSAW, POLAND

MAY 1981

1. Preface

The stress analysis of double tapered curved glulam beams can not be carried out by the usual beam formulas, instead more refined methods must be applied. Among the feasible methods one can mention partly the Point Matching Technique (a collocation method) and partly the Finite Element Method.

Some authors [Foschi, 1970] and [Blumer, 1979] have employed the Point Matching Technique and others [Gopu and Goodman, 1975] have employed the Finite Element Method. Since objections may be arisen against the assumptions employed by the above mentioned authors, it is found reasonable to accomplish a stress analysis which allows for these objections. This stress analysis is carried out be means of the Finite Element Method, which is found most suitable due to its generality.

In Chapter 2 there is given a review of the differences between the methods, and in Chapter 3 the results are compared with measurements. In Chapter 4 a method for practical stress analysis is proposed.

This report aims at a stress analysis of a double tapered curved glulam beam simple supported and loaded with an uniformly distributed load.

2. Stress analysis

Stress analysis of double tapered curved glulam beams must be based on the fact that wood is linear elastic orthotropic with the principal axes parallel with and perpendicular to grain. Tests have shown that when the beams fail in tension perpendicular to grain the rupture is brittle. In this dominating case linear elasticity may thus be used up to rupture.

As mentioned there has been proposed several methods to calculate the stress distribution, and they are either based on a Point Matching Technique or the Finite Element Method. In the following there is given a short review of the differences between the methods.

2.1 Previous proposed Point Matching Technique and Finite Element Methods

In [Foschi, 1970] and [Blumer, 1979] there are employed Point Matching Techniques. The application of stress functions assures that the compatibility and the equations of equilibrium are satisfied in the domaine. The problems arise at the boundaries.

Both authors assume that the stresses in the middle of the span may be calculated by regarding the middle section as shown on Figure 2.1.B. On this section is applied some stress boundary conditions, which simulate the desired loading condition of the tapered beam.

Both employ a polar coordinate system for the stress analysis and they choose suitable stress functions so that the boundary conditions at the lower curved boundary are satisfied exactly, e.g. $\sigma_{ij}n_j = 0$. Further by means of symmetry conditions the boundary conditions at the right vertical boundary are satisfied.

At the top of the beam the boundary conditions are satisfied approximately. In [Foschi, 1970] this is done by minimizing the sum of the square of the errors $(\sigma - p_{prescribed})$ at the chosen boundary points, see Figure 2.1. In [Blumer, 1979] the same is done by minimizing the integral along the top side of the squares of the errors in stresses. In [Blumer, 1979] there is further introduced some side conditions, which arise from that the stresses acting on the uppermost top (hatched on Figure 2.1.B) must be in balance.

This report emphasizes the common loading case, an uniformly distributed load. Both sources have equated this with a combination of pure bending, and a prescribed load at the top of the middle section. In [Foschi, 1970] it is assumed that this pure bending moment is statically equal to a linear variation of the normal stresses at the left cross section. In [Blumer, 1979] the assumption of linear variation is not introduced, instead the resultants of the stresses are put equal to N, Q and M.

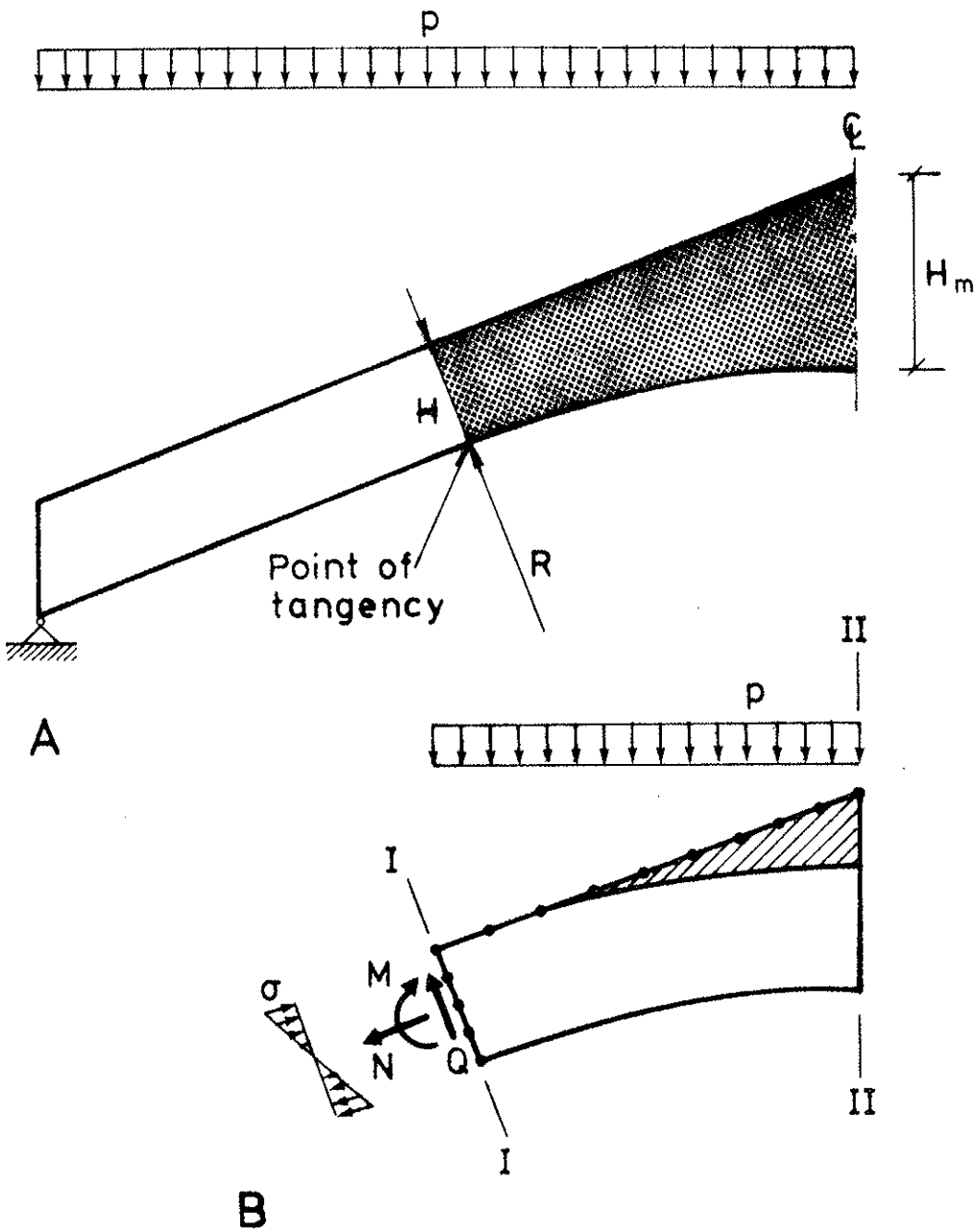

Figure 2.1. Beam geometry and loading.

Besides the above mentioned point matching techniques a Finite Element Methods has been used.

In [Gopu and Goodman, 1975] there is employed a trapezoidal finite element with rectangular orthotropy. The element has the following simple displacement functions.

$$u = a_1 + a_2x + a_3y + a_4xy$$

$$v = a_5 + a_6x + a_7y + a_8xy$$

The geometry of the element implies that the boundary conditions at the top are satisfied badly, see Figure 2.2.

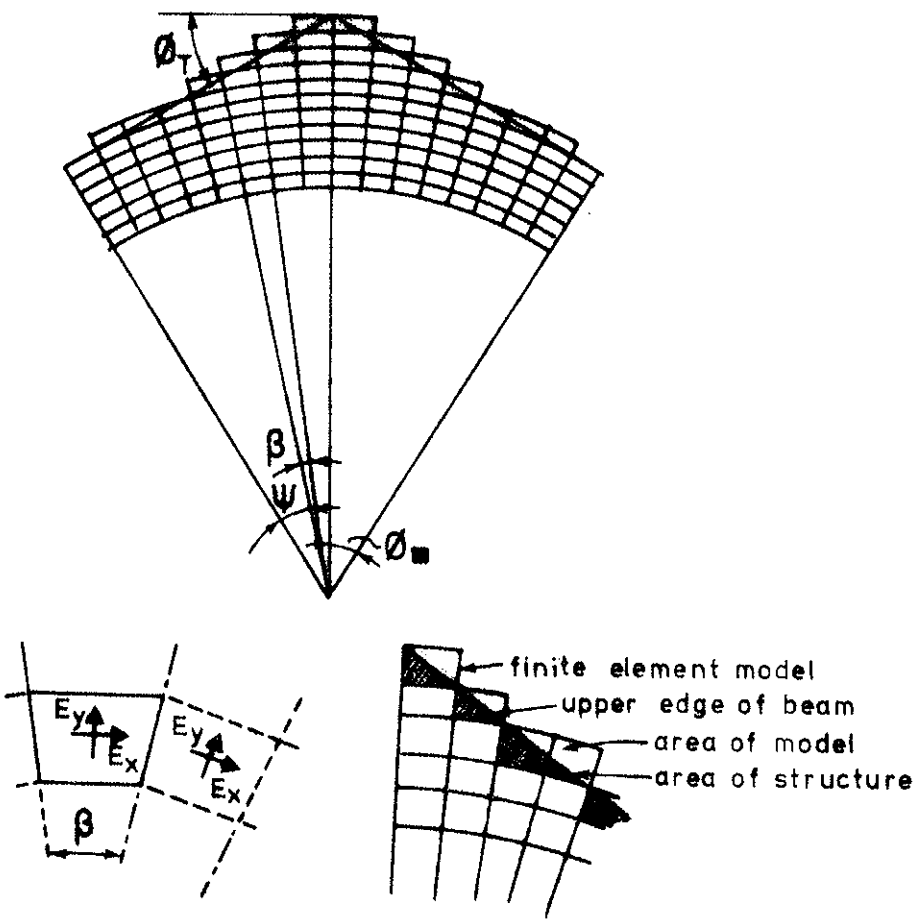

Figure 2.2. Beam geometry, arrangement of elements and and definition of orthotropy.

2.2 Another Finite Element Method

The author has developed a finite element program for the calculation of double tapered curved beams. It is based on a program basis developed by a colleague, Dr. Leif Otto Nielsen.

The compatible element employed is triangular with 6 nodes and the displacement functions are complete to the second degree. The material is assumed rectangular orthotropic within an element, with a constant inclination equal to the lamella inclination at the centre of gravity of the element. As it appears from Figure 2.3 the geometry of the element allows a good geometric modelling of the beam, it is only at the curved bottom side that there are insignificant geometric differences, which decrease as the number of elements increase.

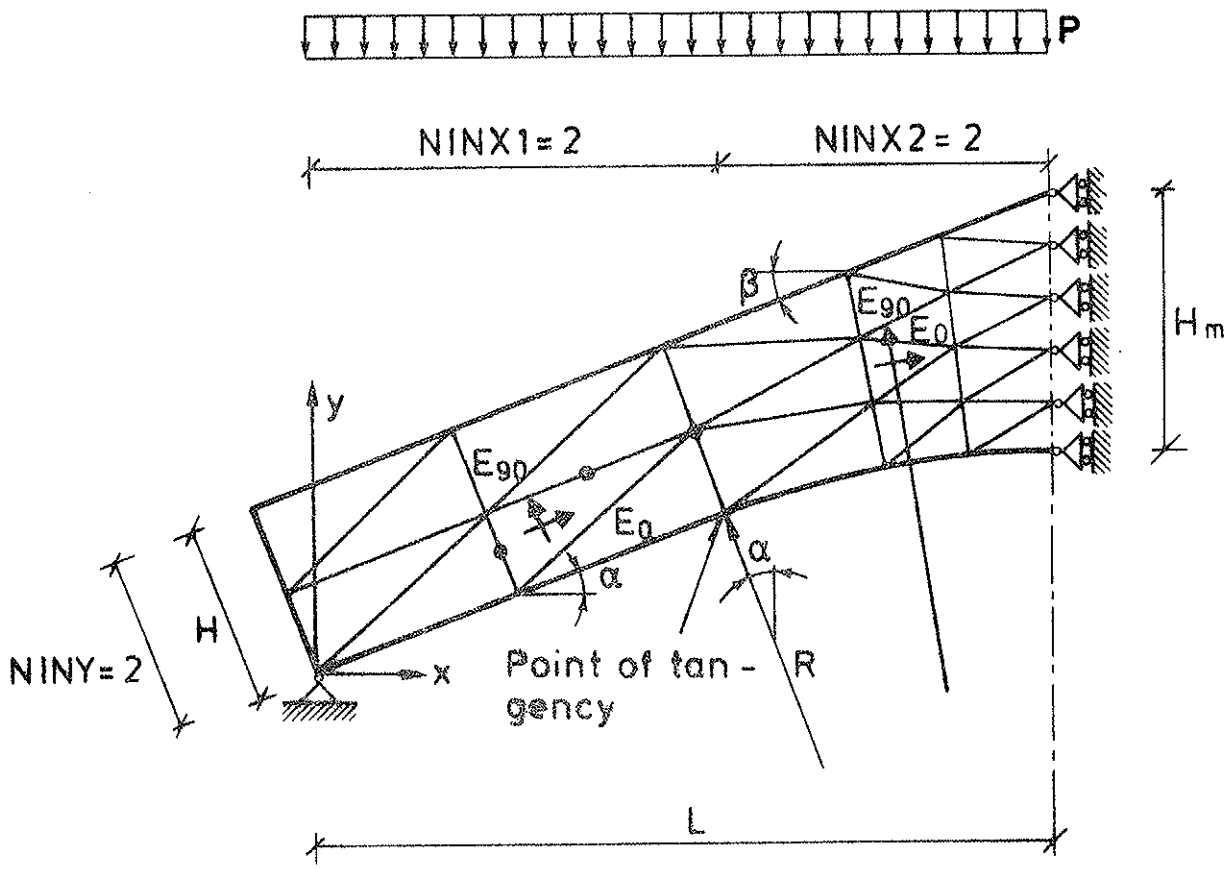

Figure 2.3. Beam geometry, arrangement of elements and definition of orthotropy.

The beam is assumed simple supported with an uniformly distributed load.

The supports and the loading are shown on Figure 2.3. The number of elements is governed by NINY, NINX1 and NINX2 , which are the number of element divisions in the Y-direction and in the X-direction. At the apex the mesh is made finer in order to improve the solution. By means of convergens investigations it is estimated how fine a mesh should be employed. The mesh shown in Figure 2.3 is very coarse. In Figure 2.4 is shown an example of an element division used for the stress analysis in this report. This mesh should give an error in the stresses less than 1% .

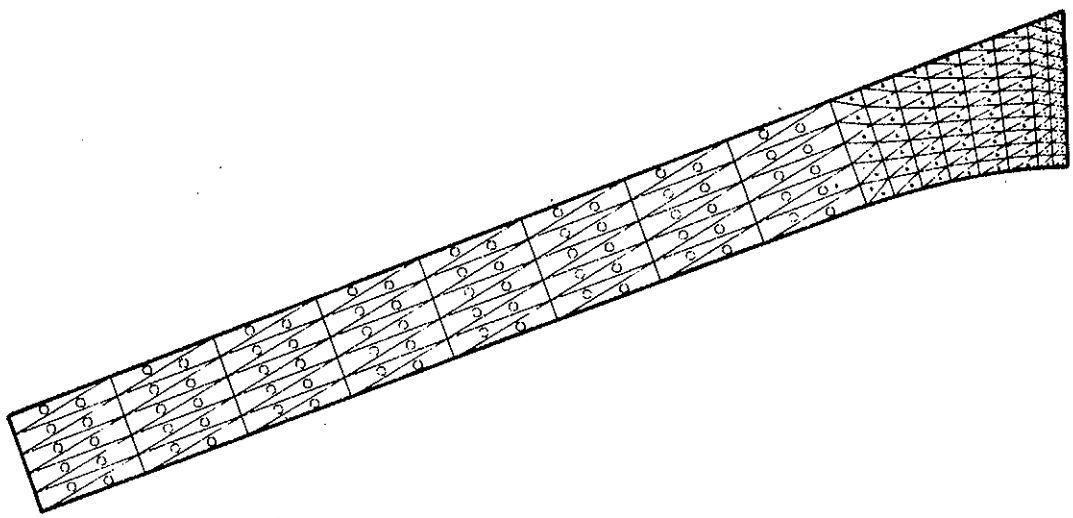

Figure 2.4. Example of element division.
NINY = 5 , NINX1 = 8 , NINX2 = 8 .

The loads are applied as they appear in reality, f.ex. distributed loads or/and concentrated loads may be applied.

2.3 Comparison of the results of the methods

The comparison of the methods is done with reference to the common case, where the beams is simple supported and loaded with an uniformly distributed load at the top of the beam, as shown in Figure 2.1.
There are some differences between the methods, which arise from the boundary conditions used in the different methods. These are enumerated in the following.

The previously proposed methods have been used to set up some simple formulas for the calculation of maximum stresses. In this case there was not applied an uniformly distributed load at the top of the beam, which among other things should imply that the calculated tensile stresses prependicular to grain are to big. This may be seen from Figure 2.5, which shows σ_{90} calculated by means of the FEM for different spans, but the moment at the middle is kept constant. The distributed load decreases thus when the span increases, and becomes negligible for the biggest span.

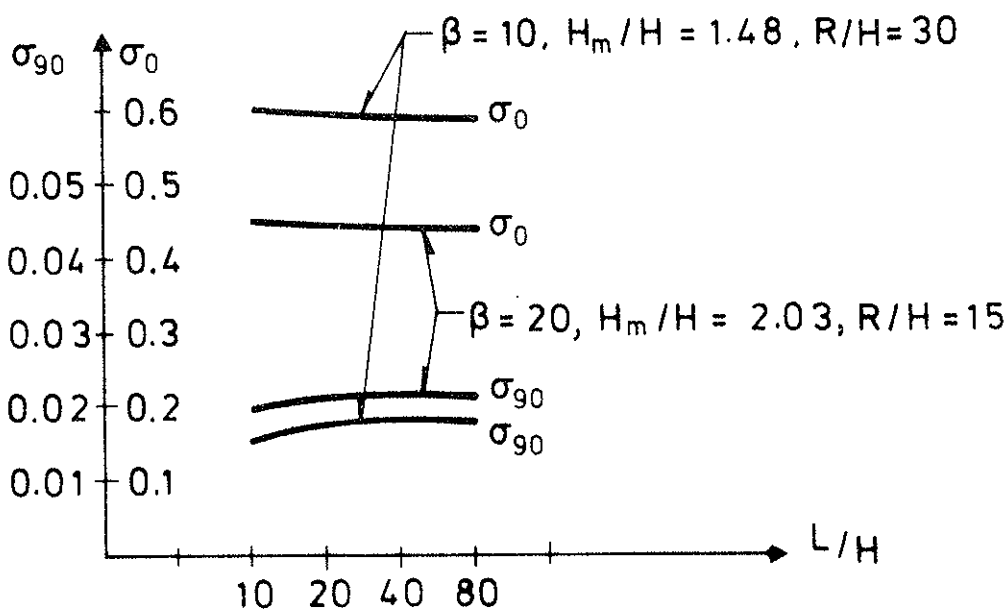

Figure 2.5. Maximum stresses at apex for varying span but with constant moment at the middle, 6 M (thickness · H^2) = 1 N/mm^2. Geometry and load as defined in Figure 2.3.

At the left boundary I - I of the section shown in Figure 2.1.B the authors satisfy the boundary conditions in different ways, but the conditions are only formulated in stresses or generalized stresses (N, Q, M) . Neither the deformations nor the stiffness of the leftmost part of the beam with constant height occur in the boundary conditions. From Figure 2.6 it appears that there are differences in the stress distributions at the left boundary I - I , specially the stress concentration at the top may be noticed.

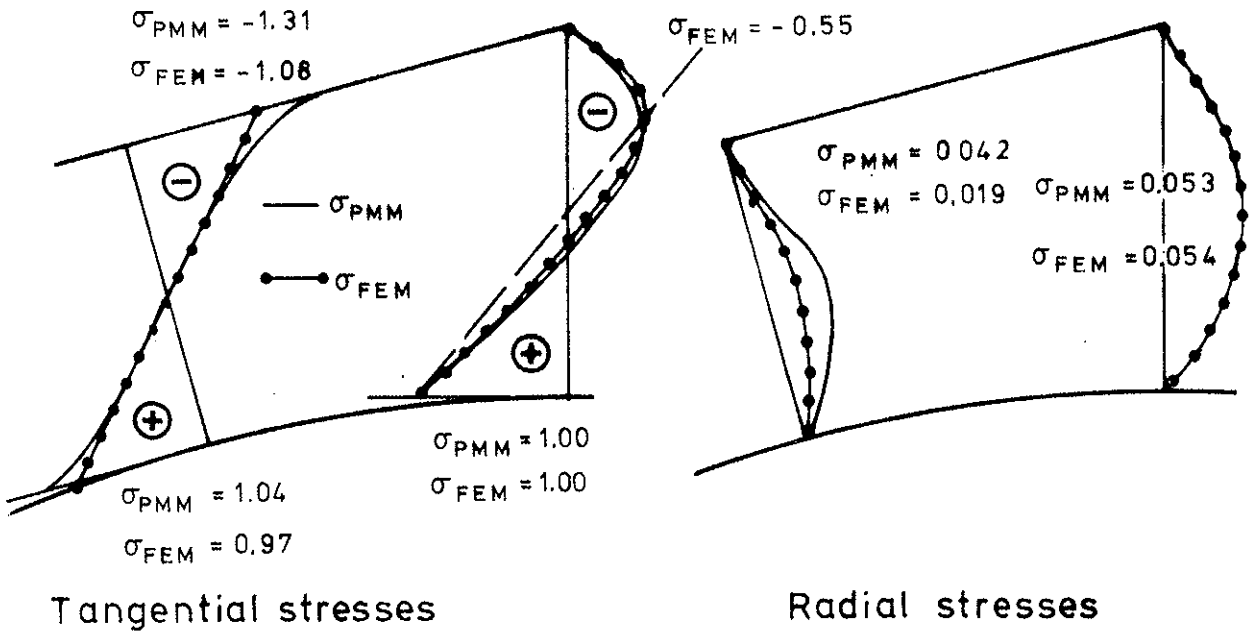

Figure 2.6. Comparison of stresses calculated by means of a Point Matching Method (PMM) [Blumer, 1979, p 136] and the proposed Finite Element Method FEM.
$E_0/E_{90} = 36.0$, $E_0/G = 22{,}09$, $\nu = 0.30$.
$\alpha = \beta = 15^{\circ}$, $H_m/R_m = H_m/(R_m + \frac{1}{2} H_m) = 0.234$.

3. Stress analysis of test beams

In [Möhler & Blumer, 1974, Bild 25 and 26] there is shown calculated and measured stresses. These are also shown in Figure 3.1 together with stresses calculated by the Finite Element Method.

For the FEM there is employed two sets of elastic constants, one similar to what was employed in the PMM and one based on measured E-moduli, shown with dot-and-dash line.

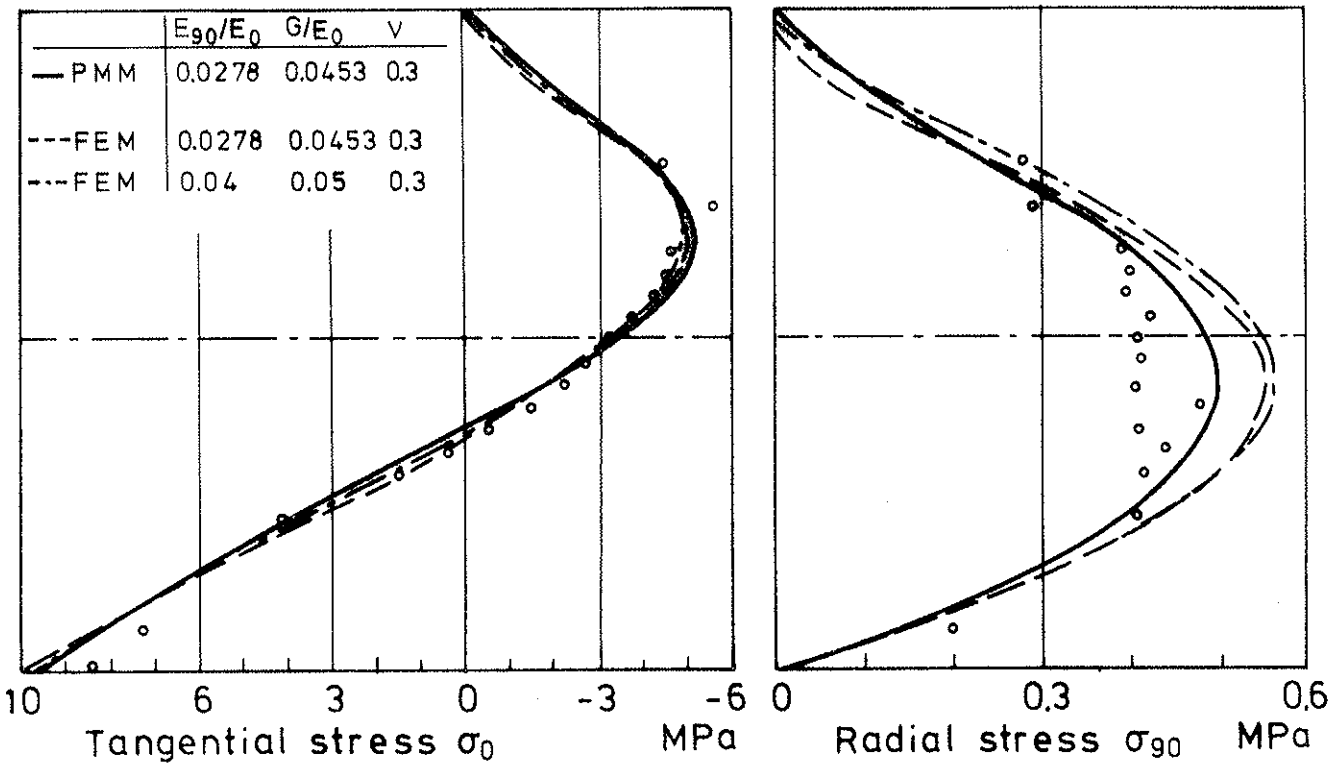

Figure 3.1. Calculated and measured stresses in beam 1H2. Stresses are calculated either by a Point Matching Method (PMM) or by the proposed Finite Element Method (FEM).

The agreement between measured and calculated stresses in the fibre direction speaks for itself. There is some deviation for the stresses σ_{90} perpendicular to grain, but the same is the case for the test with the same curved beam with constant hight, see [Möhler & Blumer, 1974, Bild 26]. There is thus an indication for that the measured stresses are 20% too low, and if that is correct then the agreement is excellent.

In [Foschi, 1970, p 42-44] there is shown calculated and measured strain. In Figure 3.2 these are compared with the results from FEM, and as can be seen, the agreement is good.

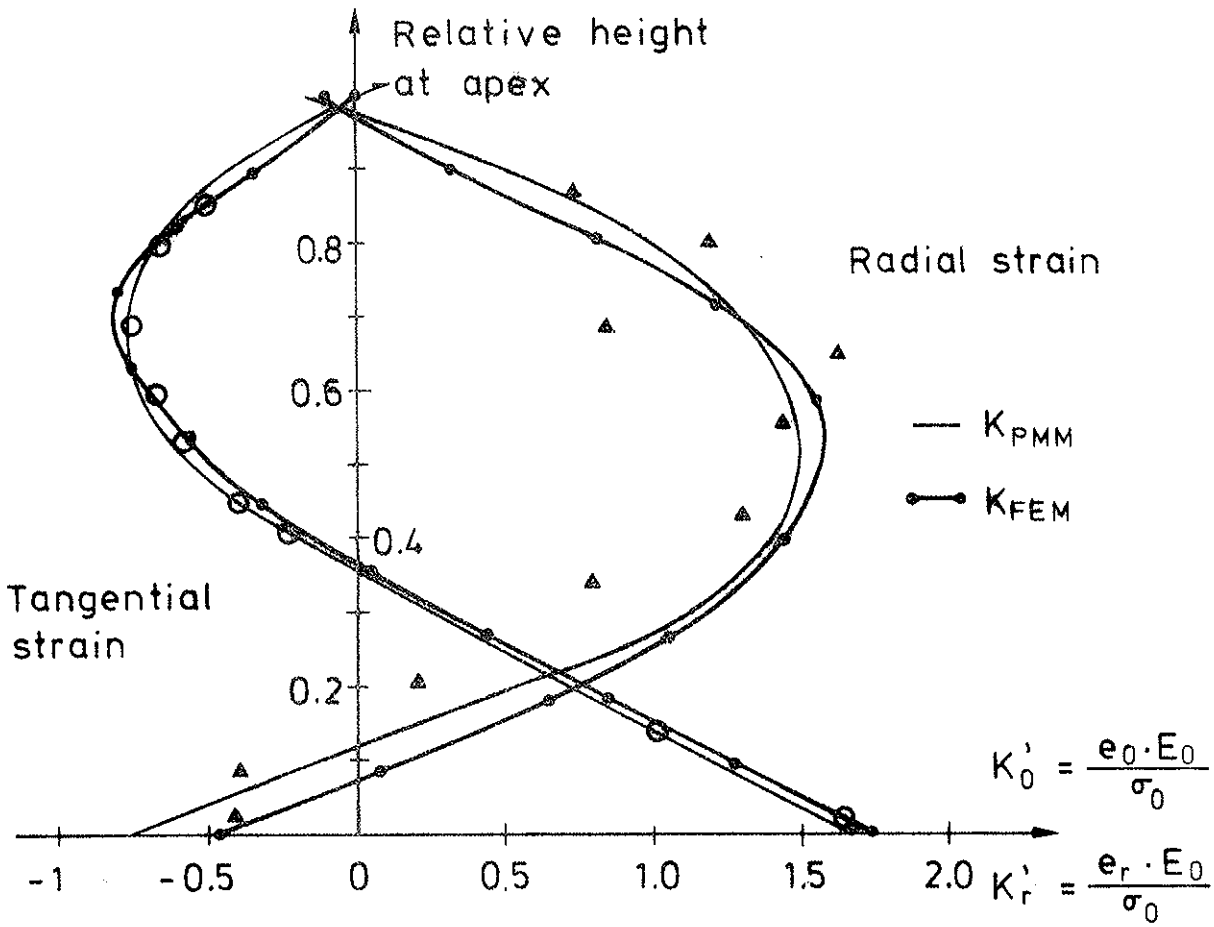

Figure 3.2. Comparison of strain coefficients at apex. $E_0/E_{90} = 14.53$, $2 \cdot \nu E_0/E_{90} - E_o/G = -16.91$, $\nu_{0,90} = 0.033$, $\nu_{90,0} = 0.473$, $\alpha = 16.65$, $\beta = 18.43$, $H_m/L = 1.132$, $H/(\cos\alpha \cdot H_m) = 0.531$, $H_m/R_m = H_m/(R + \frac{1}{2} H_m) = 0.189$.

In [Fox, 1974] is published some measured failure loads for pitched tapered beams made of Douglas-fir and/or Western Larch. By means of the FEM-program the rupture stresses in Table 3.1 has been calculated. These values are almost the same as those calculated by the author and they are in reasonable agreement with strength values calculated from [Barett, Foschi and Fox, 1975].

TABLE 3.1. Calculated rupture stresses.
$E_0/E_{90} = 14.53$, $E_0/G = 14.97$, $\nu = 0.3$.

Beam	Rup. stresses at apex, MPa $\sigma_r = \sigma_{90}$	$\sigma_\theta = \sigma_0$	Failure mode
Group 1			
1	1.15	(19.7)	Radial
2	1.86	(31.8)	Radial
Avg.*	1.50		
Group 2			
1	(1.31)	31.0	Bending
2	1.80	(42.5)	Radial
3	(1.56)	36.8	Bending
4	(1.13)	26.6	Bending
5	(1.25)	29.5	Bending
6	1.19	(28.1)	Radial
7	(1.37)	32.4	Bending
8	(1.00)	23.7	Bending
9	(1.19)	28.1	Bending
10	(1.50)	35.3	Bending
Avg.*	1.50	30.4	

* Average of results without brackets.

In [Möhler & Blumer, 1974, Tabelle 4] there is given failure loads, e.g. load in a single press at rupture. Table 3.2 gives the calculated rupture stresses. The rupture was always a radial tension failure.

The average of $\sigma_{90,rupture} = 1.47$ MPa is in accordance with the strength values given in [Möhler & Blumer, 1974, Tabelle 8]. Tension tests on specimens from two of the beams gave an average of 1.61 MPa . Thus value must be assessed in relation to the size of the tension specimen, but only the cross section 20 × 55 mm is mentioned in the report.

TABLE 3.2. Calculated rupture stresses.
$E_{90}/E_0 = 0.04$, $G/E_0 = 0.05$, $\nu = 0.3$.

Beam	Rup. stresses at apex, MPa $\sigma_r = \sigma_{90}$	$\sigma_\theta = \sigma_0$	Until testing the beam was kept
2 H 2	1.20	26.1	indoors
2 R 3	1.44	31.4	covered outdoors
3 R 4	1.70	50.0	indoors
3 R 3	1.63	47.7	covered outdoors
4 H 4	1.49	52.7	indoors
4 H 3	1.34	47.1	covered outdoors

It may thus be concluded that the stress analysis carried out by the FEM-program gives the actual stress distribution in double tapered curved glulam beams.

4. Practical stress analysis

It is obvious that practical calculations can not be based on a FEM-program, instead simple methods are needed, which give the same results.

The simple methods are derived under the assumption that the angles α and β are equal e.g. that the inclination of the straight top and bottom are identical. The geometry of the middle section becomes thus as shown on Figure 4.1.

Test runs with the FEM-program show that in the case $\alpha < \beta$ the maximal stresses do not depend very much on α . There is a slight tendency to that σ_{90} decreases when α decreases.

In the middle section the maximum tension stress perpendicular to grain occurs always at the apex. The maximum tension stress parallel to grain occurs either at the apex or in the proximity of the point of tangency.

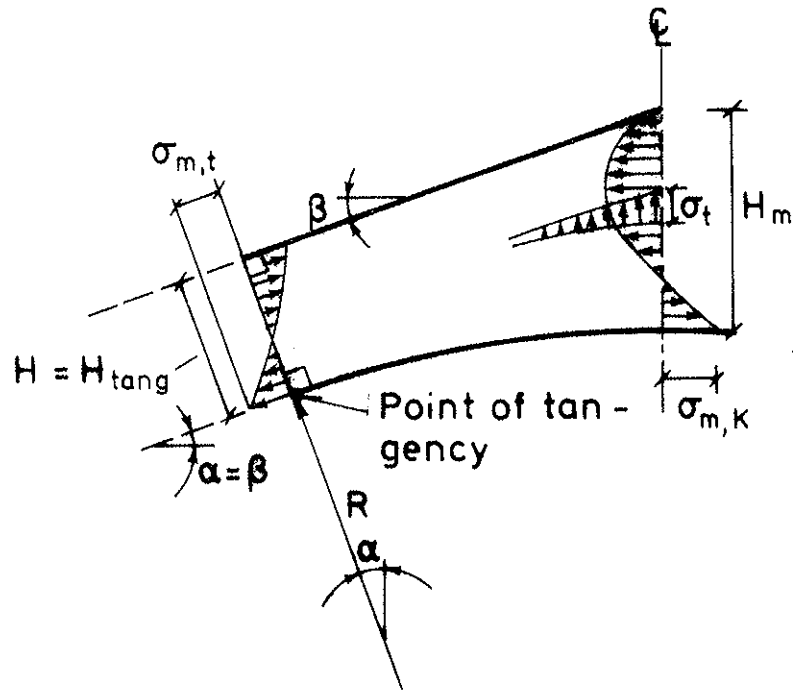

Figure 4.1. Geometry of the middle section and stress distributions showing the maximal stresses.

The maximum stresses may be calculated in two different ways. They may be related to either a formal bending stress $6M/bH^2_{apex}$ or the stresses, which would occur in a fictive curved beam with constant height $H = H_{tang}$; shown dotted on Figure 4.1. Both methods have advantages and disadvantages, and therefore both are represented, so that praxis can decide on, which formulas are the most appropriate.

	Method 1	Method 2
Apex $\sigma_{t,apex} =$	$k_{t,apex} \dfrac{6\ M}{b\ H^2_{apex}}$	$k_{t,apex} \dfrac{1{,}5 \cdot M}{(R + \frac{1}{2} H) b\ H}$
$\sigma_{m,apex} =$	$k_{m,apex} \dfrac{6\ M}{b\ H^2_{apex}}$	$k_{m,apex} \dfrac{6\ M}{b\ H^2}$
Point of tang. $\sigma_{m,tang}$	$k_{m,tang} \dfrac{6\ M_{tang}}{b\ H^2_{apex}}$	$k_{m,tang} \dfrac{6\ M_{tang}}{b\ H^2}$

b : Width, $M = \frac{1}{8}\ p\ \ell^2$, M_{tang} = Moment at the point of tangency, the factors k are given in Figure 4.1 and 4.2.

The factors k are determined so that the simple formulas give the same result as the FEM-program. In the FEM-program the following stiffness matrix was employed

$$[D] = \left(1 - \frac{\nu^2 E_{90}}{E_0}\right)^{-1} \begin{bmatrix} E_0 & \nu E_{90} & 0 \\ \nu E_{90} & E_{90} & 0 \\ 0 & 0 & G\left(1 - \frac{\nu^2 E_{90}}{E_0}\right) \end{bmatrix}$$

Where the stiffness parameters were determined by

E_0/E_{90} = either 15 or 30

E_0/G = 16

ν = 0.3

Further was employed the following geometry

L/H = 10 e.g. the height at the support = the height at the point of tangency was put equal to 1/20 of the span.

The inclination of the roof β was varied between 2.5° and 20° .

R/H was varied between 3 and 30 .

It can be seen from Figure 4.2 that the maximum bending stress at the point of tangency approximately can be found by setting the factor $k_{m,tang}$ to

$$k_{m,tang} = \max \begin{cases} 1.05 \\ 1 + 3.7 \cdot \tan^2\beta \end{cases}$$

The factor $k_{m,tang}$ is shown dotted on Figure 4.2. The function $1 + 3.7 \cdot \tan^2\beta$ is the same factor, which is to be used to determine the maximum bending stress in tapered beams, see formula (5.2.1d) in CIB, Structural Timber Design Code, fifth edition, Aug. 1980.

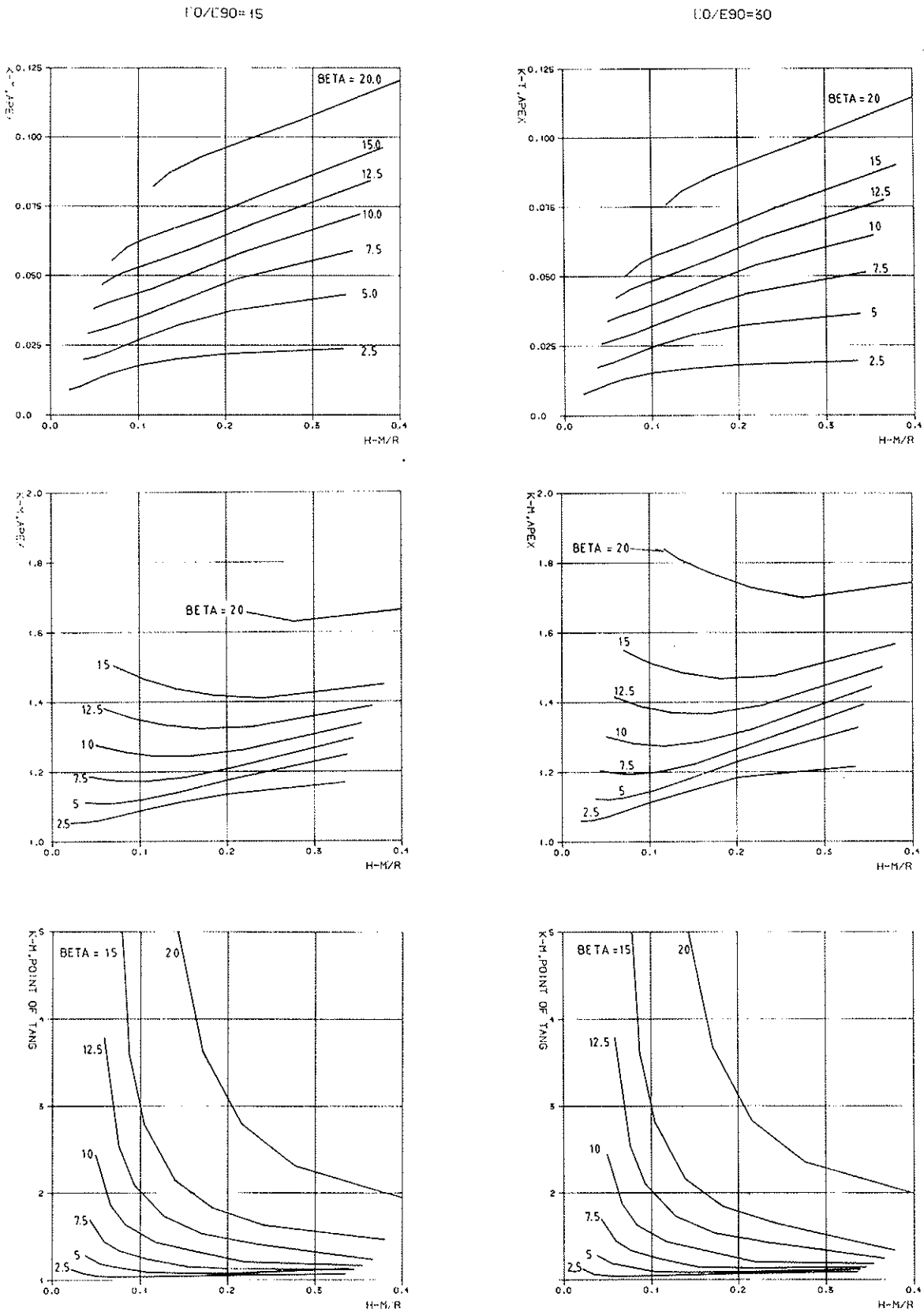

Figure 4.1. The factors $k_{t,apex}$, $k_{m,apex}$, $k_{m,tang}$ for method 1.

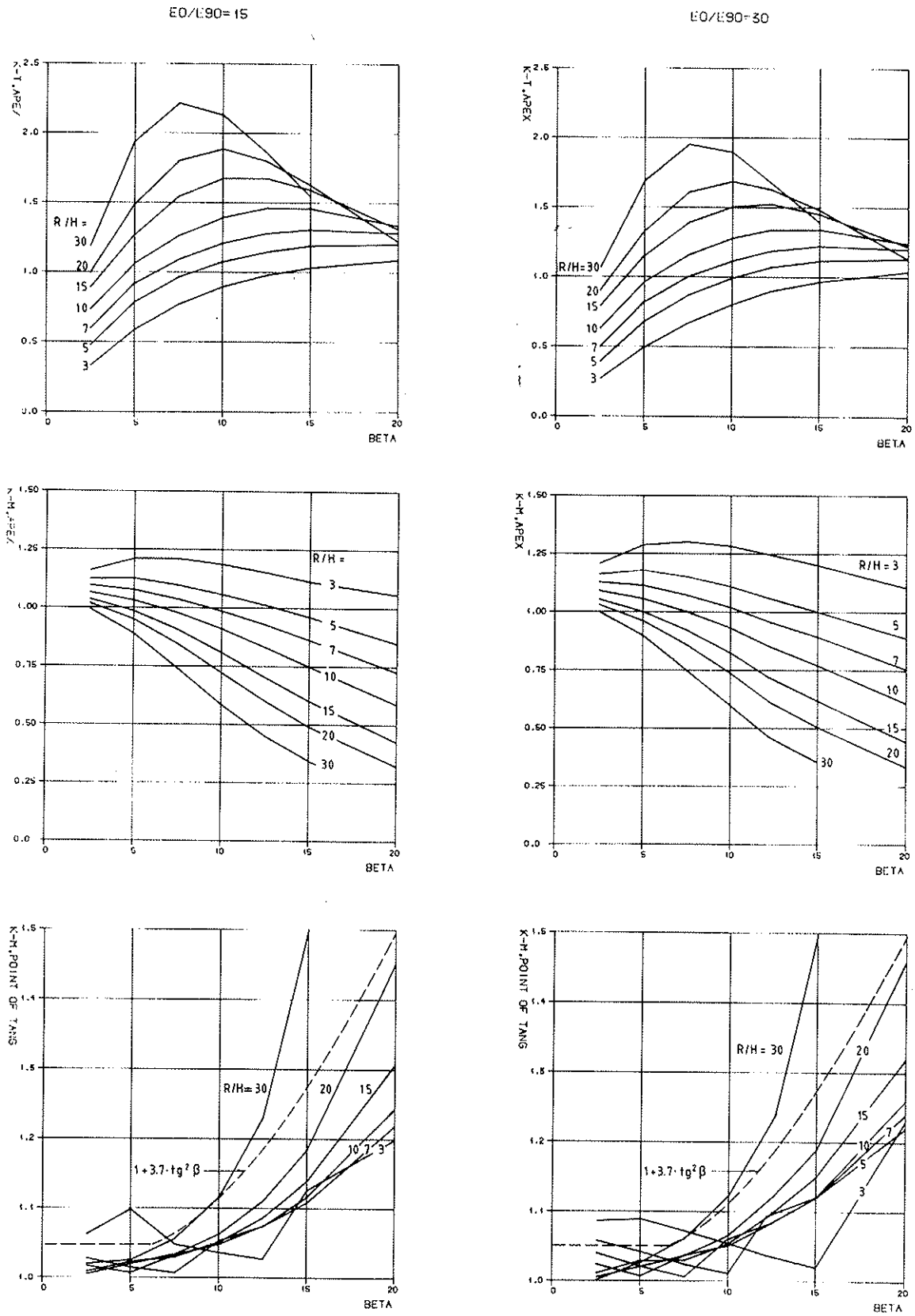

Figure 4.2. The factors $k_{t,apex}$, $k_{m,apex}$, $k_{m,tang}$ for method 2.

References

Barrett, J.B., Foschi, R.O. and Fox, S.P., 1975.
Perpendicular-to-grain strength of douglas-fir.
IUFRO-meeting Delft 1975.

Blumer, Hermann, 1979.
Spannungsberechnungen an anisotropen Kreisbogenscheiben und Satteltraegern Konstanter Dicke.
Lehrstuhl für Ingenieurholzbau und Baukonstruktionen der Universität (TH) Karlsruhe.

Foschi, Ricardo O., Jan 1970.
Point Matching Analysis of curved timber beams.
Journal of the Structural Division, Vol. 96, No. ST1.

Foschi, Ricardo O. and Fox, Selwyn P., Oct. 1970.
Radial stresses in curved timber beams.
Journal of the Structural Division, Vol. 96, No. ST10.

Fox, Selwyn P., 1974.
Strength and deformation of pitched-tapered douglas-fir glued-laminated beams.
Wood and Fiber, Fall 1974, V.6 (3).

Gopu, Vijaya K.A. and Goodman, James R., 1975.
Full-scale tests on tapered and curved glulam beams.
Journal of the Structural Division, Vol. 101, No. ST12.

Möhler, Karl und Blumer, Hermann, 1974.
Versuche mit gekrümmten Brettschichtträgern, Teil 2: Träger mit geneigten Obergurt.
Holzbau-Versuche (V.Teil). Wilhelm Ernst & Sohn, Berlin.

Appendix 1

Transformation of the stiffness matrix

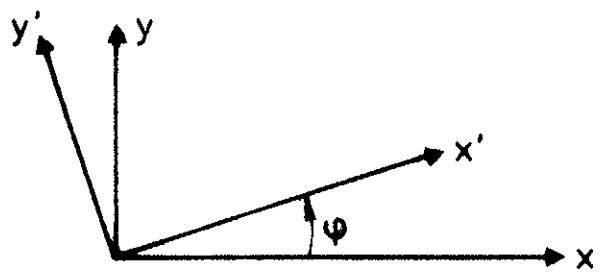

Figure 1. Coordinate systems. (x,y) defines the principal axis.

The transformation matrix T gives the relation between the strains in the two coordinate systems.

$$\{\varepsilon\} = [T]\ \{\varepsilon'\} \tag{A1}$$

where

$$\{\varepsilon\} = \begin{Bmatrix} \varepsilon_x \\ \varepsilon \\ \gamma \end{Bmatrix} \qquad \{\varepsilon'\} = \begin{Bmatrix} \varepsilon'_x \\ \varepsilon'_y \\ \gamma' \end{Bmatrix}$$

$$[T] = \begin{bmatrix} \cos^2\varphi & \sin^2\varphi & -\cos\varphi \cdot \sin\varphi \\ \sin^2\varphi & \cos^2\varphi & \cos\varphi \cdot \sin\varphi \\ 2\cos\varphi \cdot \sin\varphi & -2\cos\varphi \cdot \sin\varphi & \cos^2\varphi - \sin^2\varphi \end{bmatrix} \tag{A2}$$

The potential energy is independent of the coordinate system.

$$\begin{aligned} \{\sigma'\}^T\ \{\varepsilon'\} &= \{\sigma\}^T\ \{\varepsilon\} \\ &= \{\sigma\}^T\ [T]\ \{\varepsilon'\} \end{aligned} \tag{A3}$$

$$\Rightarrow \quad (\{\sigma'\}^T - \{\sigma\}^T [T]) \{\varepsilon'\} = 0$$

$$\Rightarrow \quad \{\sigma'\} = [T]^T \{\sigma\} \tag{A4}$$

The stiffness matrix [D] gives the relation between σ and ε in the (x,y) coordinate system.

$$\{\sigma\} = [D] \{\varepsilon\} \tag{A5}$$

where

$$[D] = \begin{bmatrix} E_0 & \nu E_{90} & 0 \\ \nu E_{90} & E_{90} & 0 \\ 0 & 0 & G \end{bmatrix} \tag{A6}$$

By means of (A1) formula (A5) becomes

$$\{\sigma\} = [D] [T] \{\varepsilon'\}$$

$$\Rightarrow \quad [T]^T \{\sigma\} = [T]^T [D] [T] \{\varepsilon'\} \tag{A7}$$

According to (A4) the left side of (A7) is equivalent to $\{\sigma'\}$. The desired relation between $\{\sigma'\}$ and $\{\varepsilon'\}$ becomes

$$\{\sigma'\} = [T]^T [D] [T] \{\varepsilon'\} \tag{A8}$$

$$= [D'] \{\varepsilon'\} \tag{A8}$$

Where [D'] is the stiffness matrix in the (x',y')-system

$$[D'] = [T]^T [D] [T] \tag{A9}$$

CIB-W18/14-12-4

INTERNATIONAL COUNCIL FOR BUILDING RESEARCH STUDIES AND DOCUMENTATION

WORKING COMMISSION W18 - TIMBER STRUCTURES

COMMENT ON PAPER CIB-W18/14-12-3

by

E Gehri

Eidgenössische Technische Hochschule
SWITZERLAND

WARSAW, POLAND
MAY 1981

EIDGENÖSSISCHE TECHNISCHE HOCHSCHULE ZÜRICH

Baustatik und Stahlbau

HIL-Gebäude
Telefon 01 57 59 80

NEU
01 / 377 4411

Postadresse:
Baustatik und Stahlbau
ETH-Hönggerberg
CH-8093 Zürich
E. Gehri

Mr. J.G. Sunley
Chairman and Co-ordinator CIB-W18
c/o TRADA
Stocking Lane
Hughenden Valley

High Wycombe, Buckinhamshire HP 14 4ND
GREAT BRITAIN

Zurich, 1st May 1981

Dear Mr. Sunley,

Unfortunately I will not be able to attend the CIB-meeting in Warsaw due to military service duties in my country.

I received the final version of the CIB-Timber Code and appreciate the intense work done by the editorial committee. In connection with the new swiss timber code, which will become effective in September 1981, we have done experimental work on bolts. The work is not yet finished but the results showed that the expression for F_u depending on timber strength and on bolt strength deleted in the last version should be newly introduced.

I just received the paper of RIBERHOLT on "Double tapered curved glulam beams". This work confirmes the validity of the results of FOSCHI and BLUMER. The difference shown between PPM and FEM was greater for the radial stress, but always smaller than 10 %. RIBERHOLT's paper shows although the influence of an uniformly distributed load of the top of the beam. For bending stresses the influence is negligible for the whole practical range of L/H. For the perpendicular stresses a significant decrease was found for smaller L/H-ratios.

The influence of a direct applied load can although be found by a simple static consideration, as explained in the sheet annexed.

The additional bending stresses due to direct local loading are very small, since they are depending on the factor $(a/\ell)^2$. The additional perpendicular stresses, which are proportional to the applied load, have larger influence. Assuming a linear distribution over the height of the girder, we can therefore assume that the perpendicular stress due to pure bending will be diminished by the half load direct applied. As has shown RIBERHOLT, for smaller L/H-ratios which would correspond to larger a/ℓ-values there is an interest to consider the effect of direct loading.

RIBERHOLT pointed newly out the advantages and disadvantages of presenting the maximum stresses in function of the height of the apex or of a fictive curved beam with constant height. We know from experience that in case of radial failure mode an apex means a weakening of the girder. From the engineering point of view we should therefore avoid all kinds of curved beams with apex (or apex only nailed on girder) and therefore consider the curved beam as the basic case. In my opinion we should delete the case with apex from the timber code (too big weight on this point) and make only references to corresponding publications.

With best regards,

Yours very truly,
p.p. E. Gehri
B. Lanz
B. Lanz, secretary

enclosure

copy to Mr. Riberholt

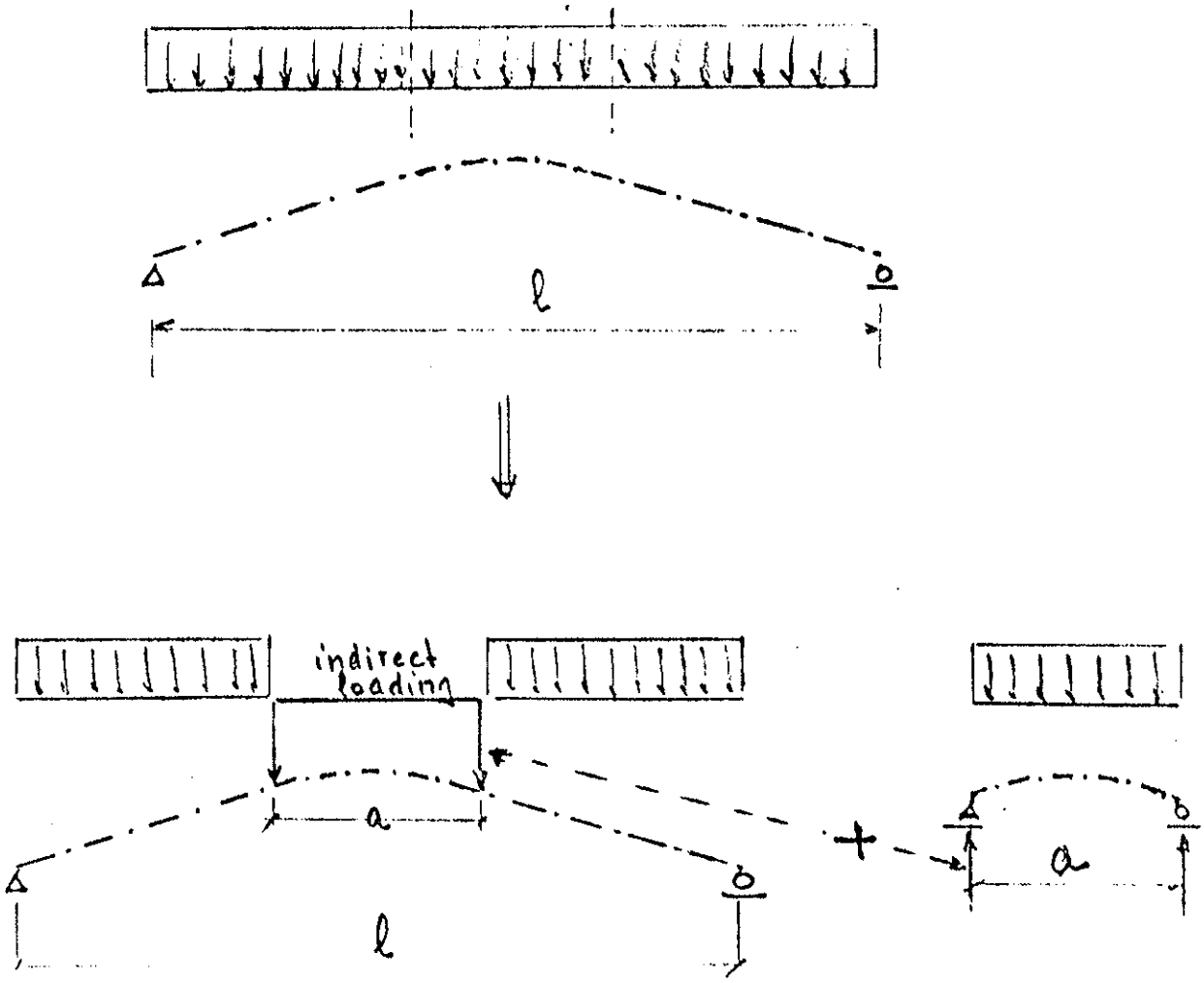

indirect loading

→ pure bending in central part

direct local loading

→ additional bending and perpendicular stresses in central part

CIB-W18/14-14-1

INTERNATIONAL COUNCIL FOR BUILDING RESEARCH STUDIES AND DOCUMENTATION

WORKING COMMISSION W18 - TIMBER STRUCTURES

WOOD TRUSSED RAFTER DESIGN

by

Th Feldborg
and
M Jóhansen

Danish Building Research Institute
DENMARK

WARSAW, POLAND
MAY 1981

Paper CIB-W18/14-14-1

Wood Trussed Rafter Design

by

Th Feldborg and M Johansen

Complete copies of this paper may be obtained by application to the authors:

Statens Byggeforskningsinstitut
(The Danish Building Research Institute)
Postboks 119
DK-2970 Hørsholm
DENMARK

Wood trussed rafter design

Strength and stiffness tests on joints

Long-term deflection of W-trussed rafters

SBI-RAPPORT 118 · STATENS BYGGEFORSKNINGSINSTITUT 1981

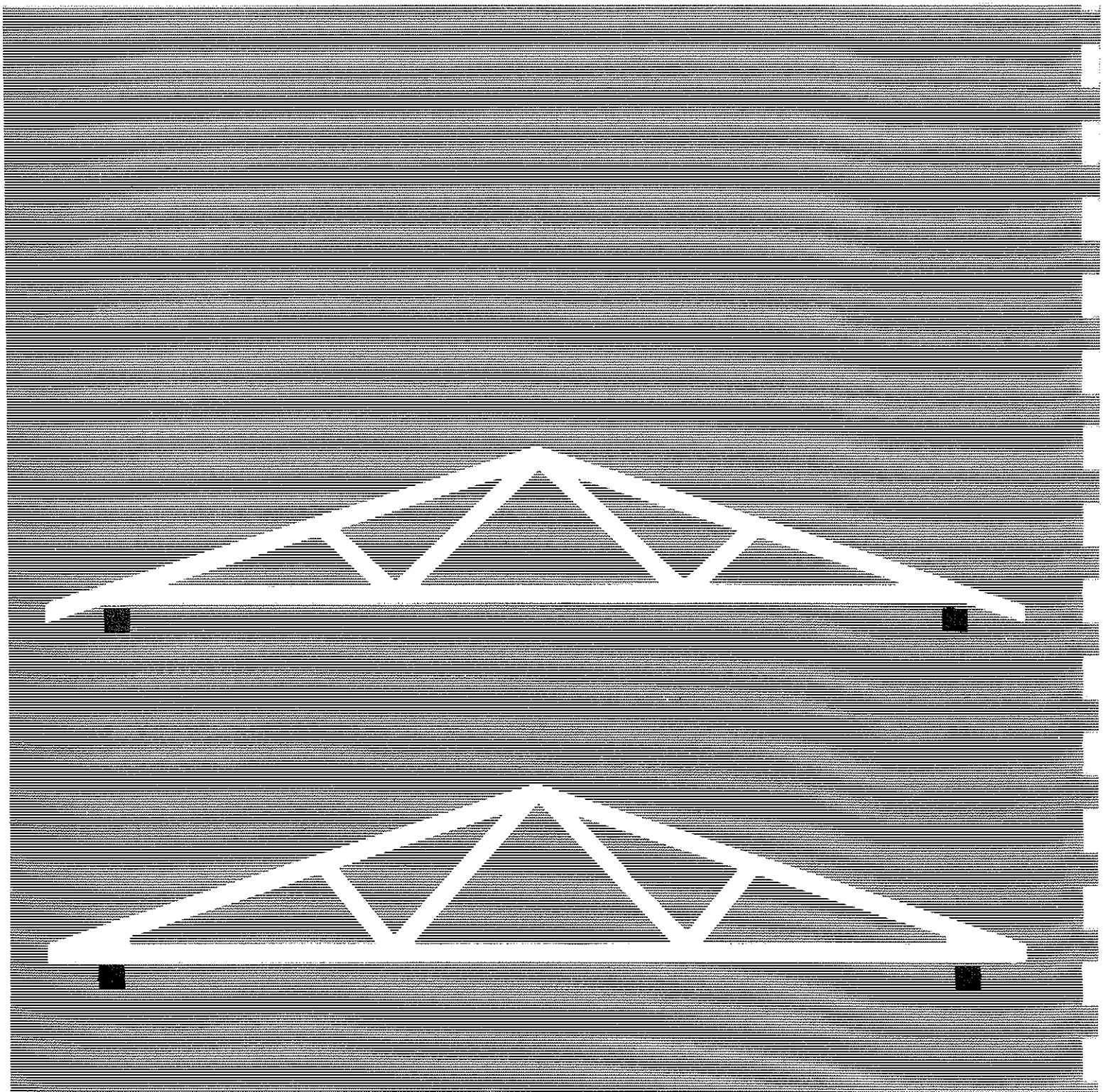

WOOD TRUSSED RAFTER DESIGN

Strength and stiffness tests on joints
Long-term deflection of W-trussed rafters

Th. Feldborg
Marius Johansen

SBI-rapport 118 · Statens Byggeforskningsinstitut 1981

Contents

Summary

The tests described in this report are part of a Nordic co-operation on the development of more rational design methods for wood trussed rafters. Heel joints and splice joints made with two types of nail-plates and with nailed steel and plywood gussets were tested under short-term loading in laboratory climate. The same types of joints were used in long-term loading tests on rafters in an open pole building, in which the deformations, climate and moisture content were registered for a period of 4½ years. On the basis of these and other Nordic tests, methods are proposed for the design of the joints and for the calculation of forces, moments and deflections for wood trussed rafters.

The moisture content of the trussed rafters was higher and varied more than anticipated (from 0.12 to 0.21)

The deflections increased slightly each time the timber dried out.

The deformations of the joints showed very big variation coefficients. Under long-term loading and moisture variations the slips were 3-20 times greater than under short-term loading.

The investigation showed that the slip stiffness of the joints has almost no influence on the normal forces but to some degree on the moments, and that it has a great influence on the deflections.

The rotational stiffness of a joint has a considerable effect on the moments in the parts of the timber closest to the joint.

The rotational stiffness of a heel joint is almost independent of the rotational stiffnes of the connectors in the joint but depends on the length of the joint and the normal force of the rafter.

1. Introduction

Up to the present time, wood trussed rafters have been designed by simple, traditional methods, in which the trusses are treated as statically determinate lattice systems with frictionless joints at the nodes.

However, numerous tests, both in Denmark and abroad, show that this method of analysis is unsatisfactory. The strength of the trusses is often considerably greater than the design value, and there are big discrepancies between the calculated and the measured sectional forces and deformations.

For this reason, in 1972, Danmarks Ingeniørakademi (DIA), the Technical University of Denmark (DTH) and the Danish Building Research Institute (SBI) started a co-operative project for the purpose of specifying a more rational method of design.

At DTH, Arne Egerup performed a series of short-term tests on 56 W-trussed rafters, using 2 roof pitches and 5 different types of connectors (1). See list of references.

At DIA, Finn Bjørn Larsen investigated the risk of splitting at nail-plate joints (2).

At SBI, long-term tests were performed on some of the types of trussed rafters used in the short-term tests at DTH, together with short-term tests on the types of joints used in the trusses.

A large part of the error arising from the traditional methods of analysing trussed rafters is due to incorrect assumptions regarding the strength and stiffness of the joints. At the same time, the method previously used for calculating nail-plate joints in accordance with NKB's recommendations (3) was rather complicated, especially in connection with the heel joint.

This joint and a splice joint subjected to tension and bending were investigated in greater detail, see sections 5 and 6.

In the long-term tests, which were carried out in an open pole building, the temperature, the relative humidity and the moisture content of the wood were registered for a period of 5 years. Measurements were also taken of the deflections of the trussed rafters and the deformations of the splice joint at the lower chord of the trusses.

Further tests on nail-plate joints were carried out by Norsk Treteknisk Institutt (NTI) and Tammerfors Tekniska Högskola (TTH), Finland, and requisitioned tests on trussed rafters were carried out at Svenska Träforskningsinstitutet (STFI).

For the purpose of utilizing the experience gained and of elaborating common rules for analysis, two Nordic working groups were established in 1979, one on nail-plate joints and one on models of analysis for trussed rafters.

This report is a contribution towards the Nordic co-operation in this field.

CIB-W18/14-14-2

INTERNATIONAL COUNCIL FOR BUILDING RESEARCH STUDIES AND DOCUMENTATION

WORKING COMMISSION W18 - TIMBER STRUCTURES

TRUSS-PLATE MODELLING IN THE ANALYSIS OF TRUSSES

by

R O Foschi

Forintek Canada Corporation
CANADA

WARSAW, POLAND
MAY 1981

TRUSS PLATE MODELING IN THE ANALYSIS OF TRUSSES

R. O. Foschi
Research Scientist,
Forintek Canada Corp.,
Western Forest Prod. Lab.,
Vancouver, B.C. Canada.

Abstract

The structural analysis of a truss requires a realistic representation of the partial fixity provided by the truss-plate joints. This degree of fixity depends on the load-slip characteristics of the plate/lumber combination, on the orientation of the plate and the area of plate covering each of the joined members. Furthermore, joint stiffness is influenced by the presence of gaps between members, local plate buckling and/or yielding.This paper presents a method of analysis of truss-plate joints which is straightforward and takes into account all of the above factors, allowing the determination of maximum truss loads based on connection capacity.

Introduction

Although the deformation of the connections must be considered in the design of timber trusses, the designer often encounters difficulties in trying to implement such an analysis. Connection load-slip data are usually gathered from simple tension or compression tests, and one difficulty encountered is that of interpreting this information for cases with eccentric loadings as actually found in a truss. Another problem is presented by the nonlinear character of the load-slip relationship. This nonlinearity must be taken into account if the designer wants to estimate ultimate truss loads based on connection capacity, but the resulting nonlinear elastoplastic problem is not simple and cannot be solved without the help of computer-aided techniques.

In the case of the multiple-teeth plate connections commonly used in wood trusses, additional consideration must be given to the behavior of the connector plate itself: its compression (buckling) capacity, tensile and shear strength. Furthermore, connector plate buckling may be induced by the presence of gaps between the connected members.

The usual manner in which connections are considered in structural analysis is to simulate their behavior by means of equivalent "springs" or "fictitious members". The properties assigned to these springs must be obtained from experiments on the actual connections to be used, as it is often difficult to calculate the required properties taking into account all the parameters influencing the connection behavior. For example, it is not simple to derive the equivalent spring properties for different shapes of connected areas.

The objective of this paper is to present the formulation of a structural analysis for truss-plate connections that treats the problem without resorting to equivalent springs or fictitious members. The analysis has been implemented in the computer program SAT developed at the Western Forest Products Laboratory for the structural analysis of trusses. This program is adapted to the WFPL's PDP11/60 mini-computer, a system with 128K words (256K bytes) of core memory and a peripheral storage device.

A more detailed description of the analysis is given by Foschi (1977a,b).

Relative Displacements

How can the relative displacements between plate and wood member be described for the purpose of the analysis? Consider Figure 1. It shows a member I connected to a plate II by means of multiple teeth over the area A (1-2-3-4). With the deformation of the truss referred to a x-y-z coordinate system, let u_j, v_j and θ_j be, respectively, the displacements of point j in the x- and y-directions and its rotation about the z-axis. Similarly, let u_i, v_i and θ_i be the corresponding displacements and rotations for point i belonging to the plate.

Consider now the pair of points P and P'. These points coincide with a tooth and have the same coordinates, but P is assumed to belong to the plate while point P' belongs to the member. The relative displacement (slip) between P and P' can be determined, approximately, as a function of the displacements and rotations of points i and j. Thus,

$$\left.\begin{aligned} \Delta_x &= u_i - u_j - \theta_i r_i \sin\psi_i + \theta_j r_j \sin\psi_j \\ \Delta_y &= v_i - v_j + \theta_i r_i \cos\psi_i - \theta_j r_j \cos\psi_j \end{aligned}\right\} \quad (1)$$

where Δ_x is the relative displacement in the x-direction and Δ_y is the relative displacement for the y-direction.

Equation (1) would be exact if the links between points j and P' and between i and P were rigid. Thus Equation (1) implies that the deformation of the member between points j and P' is neglected, as well as the internal plate deformation between points i and P. To this level of approximation, therefore, the connection slip at any location within the area of contact A can be expressed in terms of the displacements and rotations of points i and j. The choice of these two points is completely arbitrary, following the assumption of rigidity implicit in Equation (1). For example, point i may be chosen at the centroid of area A, whereas point j may be the end node for member I. Finally, the absolute value of the slip between points P and P' is given by

$$|\Delta| = \sqrt{\Delta_x^2 + \Delta_y^2} \quad (2)$$

Virtual Work and the Contribution of Area A to the Global System of Equations

The principle of virtual work can be used to determine the terms that the connected area A contributes to the global system of equations. Consider Figure 2. Point P' has displaced with respect to P an amount $|\Delta|$ in the direction making an angle ψ with the x-axis. The force F required to produce this deformation will, in general, depend upon the

angle ψ and will be nonlinearly related to the slip $|\Delta|$. It will be assumed that this relationship can be expressed in the following form:

$$F(|\Delta|) = (m_o + m_1|\Delta|)(1 - e^{-k|\Delta|/m_o}) \qquad (3)$$

where the parameters m_o, m_1 and k are dependent on the angle ψ.

Equation (3) is represented in Figure 3, with k being the initial stiffness, m_1 the stiffness at large slips, and m_o the intercept of the asymptote with slope m_1. The parameter m_o is thus the ultimate load in the case of $m_1 = 0$.

Consider again Figure 2, and assume that, due to a virtual displacement of point i, points P and P' undergo a virtual relative displacement ds in the direction n. The virtual work done by the force F is, therefore,

$$W_F = F(|\Delta|)\cos(\gamma - \psi)\, ds \qquad (4)$$

The total virtual work done over the area A can be obtained by integration of Equation (4):

$$W = \int_A \beta\, F(|\Delta|)\cos(\gamma - \psi)\, ds\, dA \qquad (5)$$

where β is the density of teeth (number of teeth per unit area of plate). Since, from Figure 2,

$$\cos(\gamma - \psi)\, ds = \frac{\Delta_x}{|\Delta|} d\Delta_x + \frac{\Delta_y}{|\Delta|} d\Delta_y \quad , \qquad (6)$$

it follows, from Equation (5), that the derivative of the virtual work W with respect, e.g., to the displacement u_i, is given by

$$\frac{\partial W}{\partial u_i} = \int_A \beta\, F(|\Delta|)\left\{\frac{\Delta_x}{|\Delta|}\frac{\partial \Delta_x}{\partial u_i} + \frac{\Delta_y}{|\Delta|}\frac{\partial \Delta_y}{\partial u_i}\right\} dA \qquad (7)$$

Equation (7) gives the contribution from the connected area A to the equation corresponding to the unknown u_i in the global stiffness matrix. Equation (7) can be separated into a linear and a nonlinear part, and the details are shown by Foschi (1977b). This separation allows the final system of equations to be written in the form:

$$[K]\{x\} = R_o + R_1(\{x\}) \qquad (8)$$

where

$[K]$ = stiffness matrix from linear part;
$\{x\}$ = global vector of unknowns;
R_o = load vector;
R_1 = vector from nonlinear part, function of $\{x\}$.

The system of equations (8) can be solved by an iterative procedure, beginning, for example, with the "elastic" solution

$$\{x\}_o = [K]^{-1} R_o \quad , \qquad (9)$$

and using the iteration scheme

$$\{x\}_{i+1} = [K]^{-1}(R_o + R_1(\{x\}_i)) \qquad (10)$$
$$i = 0,1,2,\ldots$$

until convergence of the solution is obtained with a prescribed degree of accuracy. The program SAT uses an accelerating technique to reduce the number of iterations needed, and this technique is discussed by Irons (1969).

The integrations over the area of contact A required by Equation (7) can be numerically obtained, and the program SAT uses a Gaussian scheme that allows the integration over any quadrilateral shape (Foschi, 1977b).

Load-Slip Parameters

The parameters k, m_o and m_1 of Equation (3), needed in Equation (7), are dependent on the angle ψ of Figure 2, corresponding to the direction of the slip between points P and P'. These properties have to be derived from "basic" tests, and four such tests are needed. These combine the two orientations of the applied force with respect to the plate major axis and with respect to the direction of the grain in the member. The four "basic" cases are shown in Figure 4, where A-A represents the cross-section of a tooth. Case I corresponds to a test where the force is applied parallel to the plate major axis and also parallel to the grain; Case II corresponds to the force applied parallel to the plate major axis but perpendicular to the grain; Case III corresponds to the force applied perpendicular to the plate major axis and parallel to the grain; and finally Case IV corresponds to the force perpendicular both to the plate major axis and the grain of the member. In what follows, only the initial stiffness k shall be considered in detail, but similar transformations apply to the parameters m_o and m_1.

As shown in Figure 4, let ϕ be the angle between the plate major axis and the grain direction, measured counterclockwise. Further, let KAA, KAE, KEA and KEE be defined as the values of k corresponding, respectively, to Cases I, II, III and IV. If k_a is, in general, the parameter k corresponding to the case of the force applied parallel to the plate major axis, Hankinson's formula may be used to obtain k_a for different grain orientations:

$$k_a = \frac{KAA \cdot KAE}{KAA \sin^2\phi + KAE \cos^2\phi} \qquad (11)$$

This type of formula has been traditionally used in timber engineering to represent the dependence of mechanical properties on grain orientation. However, the use of Hankinson's formula is not essential to

the development of the connection analysis, and some other expression may be used to obtain k_a for intermediate angles ϕ.

Similarly, if k_e is, in general, the parameter k for the case of the force applied perpendicular to the plate major axis,

$$k_e = \frac{KEE \cdot KEA}{KEE \sin^2\phi + KEA \cos^2\phi} \qquad (12)$$

In general, one knows the angle that the plate major axis makes with the x-axis and the angle that the member grain makes with the same x-axis. These are shown with Θ and ω, respectively, in Figure 5. Using Equations (11) and (12), the initial stiffness k_1 and k_2 along the plate axes are, therefore,

$$k_1 = \frac{KAA \cdot KAE}{KAA \sin^2(\Theta-\omega) + KAE \cos^2(\Theta-\omega)} \qquad (13)$$

$$k_2 = \frac{KEE \cdot KEA}{KEE \sin^2(\Theta-\omega) + KEA \cos^2(\Theta-\omega)} \qquad (14)$$

Using again Hankinson's formula and the values k_1 and k_2, the stiffness parameters k_x and k_y, corresponding to the coordinate axes, can be computed:

$$k_x = \frac{k_1 \cdot k_2}{k_1 \sin^2\Theta + k_2 \cos^2\Theta} \qquad (15)$$

$$k_y = \frac{k_1 \cdot k_2}{k_1 \cos^2\Theta + k_2 \sin^2\Theta} \qquad (16)$$

Finally, knowing the values k_x and k_y, the initial stiffness k corresponding to the direction ψ of Figure 2 can be determined from

$$k = \frac{k_x \cdot k_y}{k_x \sin^2\psi + k_y \cos^2\psi} \qquad (17)$$

The angle ψ is deformation-dependent, but using Equations (1) and Figure 2,

$$\tan\psi = \Delta_y / \Delta_x \qquad (18)$$

The four basic tests of Figure 4 allow, therefore, an approximate determination of the required stiffness k. Although the required k is a single tooth value, the basic tests are usually carried out on a plate containing many (say, N) teeth. If the stiffness measured for the N teeth is k_o, the single tooth value k can be obtained from $k_o = N k\lambda$, where λ is a coefficient less than unity accounting for the nonuniform distribution of load among the N teeth. The coefficient λ depends upon the relative stiffnesses of the plate, the member, and the teeth. It is sufficiently accurate for the analysis of connections containing many teeth to adopt a mean value for the single tooth stiffness by letting $\lambda = 1$. Thus, approximately, $k \approx k_o / N$.

Plate Buckling, Tensile and Shear Strength

Consider Figure 6. The truss plate shown connects two members, I and II, with III and IV being the respective connected areas. The zone V, between III and IV, corresponds to the area where teeth are "ineffective" or have been taken out prior to plate pressing, leaving openings as shown in Figure 6. For the purpose of analysis, the area V may be considered as a series of short columns between the openings and connecting points such as P and P'. The length of these columns is e and the width is the separation between rows of teeth. During the deformation of the truss, these columns may be loaded in tension or in compression, with the load eccentrically applied by the teeth of areas III and IV. Furthermore, the columns undergo shear deformation if point P moves with respect to P' in the direction normal to the plate major axis n.

In tension, the load that the column can sustain is limited by the tensile yield load P_t. In compression, acting as an eccentrically loaded column, the maximum load is P_c. If Δ is the axial relative displacement of P with respect to P', Figure 7 shows the load-displacement relationships that may be assumed to represent column behavior in tension and in compression.

The load P_t, when reached, can be held with the deformation Δ increasing without bounds. The load P_c cannot be held, and further axial deformation must proceed at rapidly decreasing load. P_t may be estimated if the yield point for the plate material is known, but the calculation of P_c is more difficult, as it must involve a knowledge of the actual eccentricity with which the load is applied to the column. P_c can, however, be easily determined from simple compression tests with an experimental set-up similar to that shown in Figure 6.

The behavior in shear may be assumed as also shown in Figure 7, with the ultimate load P_s estimated from a knowledge of the tensile yield stress for the plate material.

Foschi (1977b) shows in detail the contribution of zone V to the linear part ([K]) and nonlinear part (R_1) of the global system of equations shown in Equation (8).

Gaps Between Connected Members

Consider now Figure 8. Members I and II are connected (plate not shown) but there is a gap g between them. During deformation, this gap may or may not close. If the gap closes, such that points 1 and 2 become in contact with each other, further deformation must be such that, neglecting friction, points 1 and 2 have the same displacement along the direction m of Figure 8. This implies that no consideration is given to the more difficult problem of crushing, i.e., when point 2 may approach

point 1, close the gap and then "penetrate" member I.

Since one does not know ahead of time whether a gap is going to close or not, gap-closure implies a deformation-dependent constraint to the solution of the system of equations (8). The computer program SAT deals with this problem by using Lagrange multipliers as gaps close and new constraints have to be introduced (Foschi, 1977b).

Gap-closure cannot be controlled everywhere along a gap, but only at a finite number of pair of points. For example, let gap-closure be controlled between points 1 and 2 of Figure 8. The relative displacement Δ_{12} along the direction m can be computed from

$$\Delta_{12} = (u_j - u_i + \theta_i r_1 \sin\psi_1 - \theta_j r_2 \sin\psi_2) \cos\nu + (v_j - v_i - \theta_i r_1 \cos\psi_1 + \theta_j r_2 \cos\psi_2) \sin\nu \qquad (19)$$

in terms of the displacement and rotations of the points i and j, end nodes for the connected members.

A constraint to Equation (8) is introduced <u>only</u> if $\Delta_{12} < 0$ <u>and</u> $|\Delta_{12}| > g$, in which case the constraint introduced is

$$\Delta_{12} = -g \qquad (20)$$

The set of constraint equations (20) may be assembled into a matrix $[\Omega]$ with right-hand side $\{-g\}$, and the system of Equation (8) becomes

$$\begin{bmatrix} [K] & [\Omega]^T \\ [\Omega] & [0] \end{bmatrix} \begin{Bmatrix} \{x\} \\ \{\mu\} \end{Bmatrix} = \begin{Bmatrix} R_0 + R_1(\{x\}) \\ \{-g\} \end{Bmatrix} \qquad (21)$$

where $\{\mu\}$ is the vector of Lagrange multipliers.

It is apparent from Equation (21) that the introduction of these constraints increases the size of the problem and the demand on computer memory. The program SAT limits the number of gap-controls to five.

Numerical Example

Figure 9 shows a simple truss loaded with uniformly distributed load along the top chord. All members are 2x6 lumber with the top and bottom chords having an $E = 1.8 \times 10^6$ psi and with the diagonals having an $E = 1.5 \times 10^6$ psi.

The load is incremented in steps, with each load step being 10 lb/in.

Plate load-slip parameters from the four basic tests were assumed as shown in Foschi (1977b, Table 3):

k : KAA = 3,141 lb/in
KAE = 2,951 lb/in
KEA = 6,960 lb/in
KEE = 4,731 lb/in

m_0 : AA = 49.7 lb
AE = 38.6 lb
EA = 47.2 lb
EE = 43.8 lb

m_1 : all zero

and, similarly, plate strength values

P^t = 270 lb
K^t = 225,000 lb/in
P^a = 229.5 lb
P^c = 155.9 lb
K^s_s = 86,538 lb/in

Gaps were considered at both heel joints and at the crown of the truss. Three gaps were considered: 0.0, 0.1 in and 0.2 in, and the same gap was assumed to occur at the heels and at the crown.

The program SAT was run with its nonlinear capacity and also with its "elastic" option (i.e., only Equation (9)). In the nonlinear case, the iteration process was stopped when the change in the norm of the vector $\{x\}_{i+1}$ with respect to that of the vector $\{x\}_i$ was less than 0.0005 times the norm of $\{x\}_i$.

As part of the algorithm that accelerates the iteration process, the program SAT includes a parameter ω that is capable of recognizing yielding or incipient large truss deformations. For this example, the truss was assumed to have "yielded" due to connections' excessive deformation when ω exceeded 200.0.

Figure 10 shows truss load-deformation curves as derived from the computer analysis.

It is seen that the "elastic" solution represents a good approximation up to 4 load steps, but that the nonlinear character of the load-slip relationships starts influencing the results for higher loads.

For gaps g = 0.0, the connections yield, such that large deflections occur after 10 load steps, with the truss considered "yielding" at 11 steps.

When the gaps are assumed to be g = 0.1 in., Figure 10 shows that the stiffness of the truss is decreased and the trend is toward a lower ultimate load, controlled now by the buckling or yielding strength of the plates. However, at about 7 load steps, the gaps close, the localized buckling is arrested, the truss stiffens and is able to pick up more load until yielding occurs in a manner similar to that for g = 0.0. The curve thus shows a "kink" around step 7 and a maximum deflection of 0.8 in.

The initial response for gaps g = 0.2 in. is identical to that for gaps g = 0.1 in. However, now the gaps are too large to achieve closure before significant buckling and/or yielding takes place. As a result, no "kink" is observed and the ultimate truss load is lowered and controlled by the plate strength.

As an interesting comparison, Figure 10 also shows the load-deflection relationship that would be derived from a pin-joint analysis. It seems that this approximation is, in this particular case, quite satisfactory in the "elastic range".

Figures 11 and 12 show the deflected shape for the truss at, respectively, load steps 2 and 10, and assuming no gaps (g = 0.0).

Finally, Figures 13 and 14 show the deformation of the heel plate at the left-hand side of the truss, for load steps 2 and 10 and for the case g = 0.0.

The last four Figures show deformations in an exaggerated scale with the sole purpose of illustration.

Final Remarks

An analysis of truss-plate connections, as implemented in the computer program SAT, has been presented. The analysis includes the consideration of plate orientation, nonlinear load-slip characteristics, actual shape of connected areas, plate buckling, plate yielding in tension and/or shear, gaps between members, and the influence that these different factors have on the deformation of the truss and its ultimate load as controlled by connection capacity.

An advantage of the present method is that it deals with the connection as with any other part of the structure, that is, like any additional member in the linkage of members. It avoids, therefore, the need to define equivalent springs or fictitious members, and each connection is treated with the same underlining principle.

A particular advantage of a nonlinear analysis is that it allows an estimation of ultimate loads. Since the analysis does not include a fracture criterion for lumber, the ultimate loads derived correspond to the limit state controlled by the capacity of the connectors. The analysis could be easily extended, however, when a reliable model for lumber strength is developed. The program SAT does, of course, compute member forces and moments, and thereby member stresses. A simple criterion of assuming lumber failure when the maximum member stress exceeds a prescribed value has not proven to be reliable method of predicting when and where a truss member will collapse (Aplin, 1976).

Finally, an analysis tool that allows the determination of ultimate loads and an accurate calculation of deformations is very useful, in that it allows computer simulation of truss behavior for reliability studies.

References

Aplin, E.N. 1976. A Special Report to the Truss Plate Institute of Canada and the Central Mortgage & Housing Corporation. Canadian Forestry Service, Eastern Forest Products Laboratory, Ottawa, Canada.

Foschi, R.O.1977a. Analysis of Wood Diaphragms and Trusses. Part I: Diaphragms. Canadian Journal of Civil Engineering 4(3):345-352.

Foschi, R.O.1977b. Analysis of Wood Diaphragms and Trusses. Part II: Truss-Plate Connections. Canadian Journal of Civil Engineering 4(3):353-362.

Irons, B.M., and R. C. Tuck. 1969. A Version of the Aitken Accelerator for Computer Iteration. Int. Journal for Numer. Meth. Eng. 1:275-277.

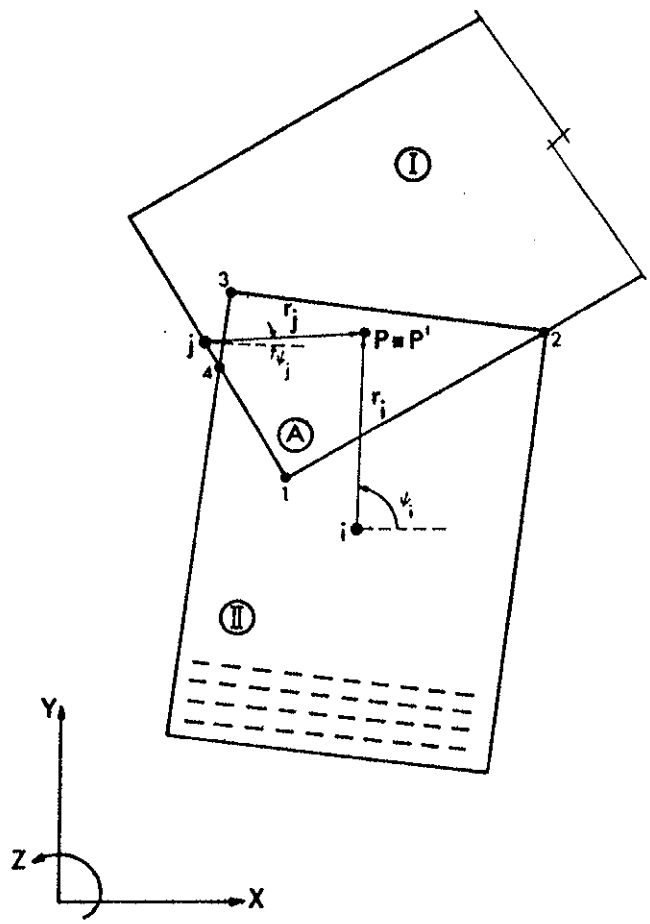

Figure 1. Truss-plate connection.

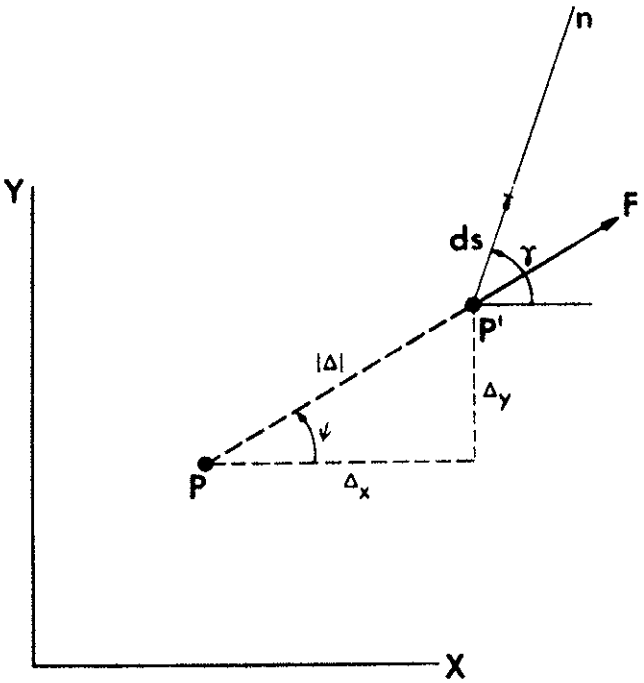

Figure 2. Tooth relative displacements.

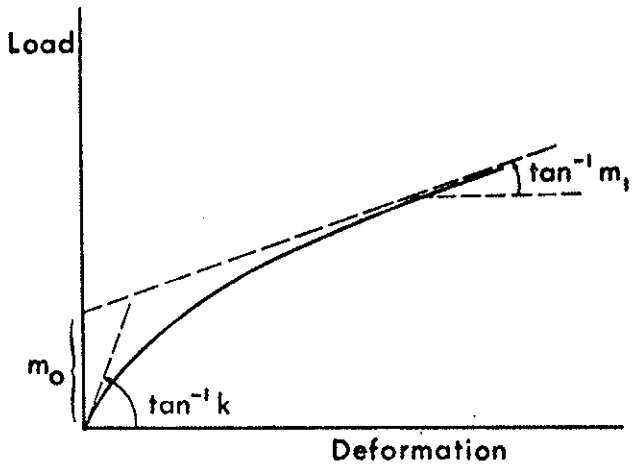

Figure 3. Tooth load-slip relationship.

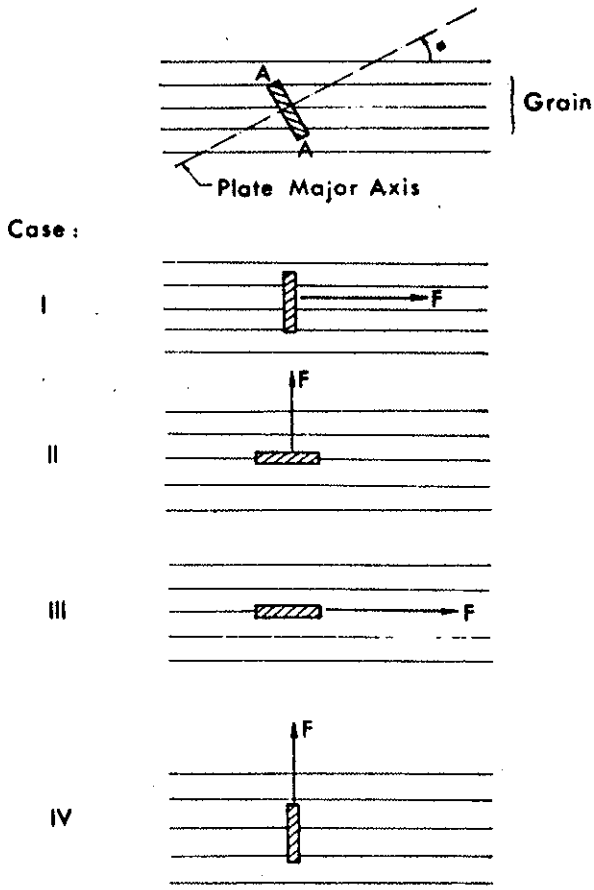

Figure 4. Basic load-slip tests.

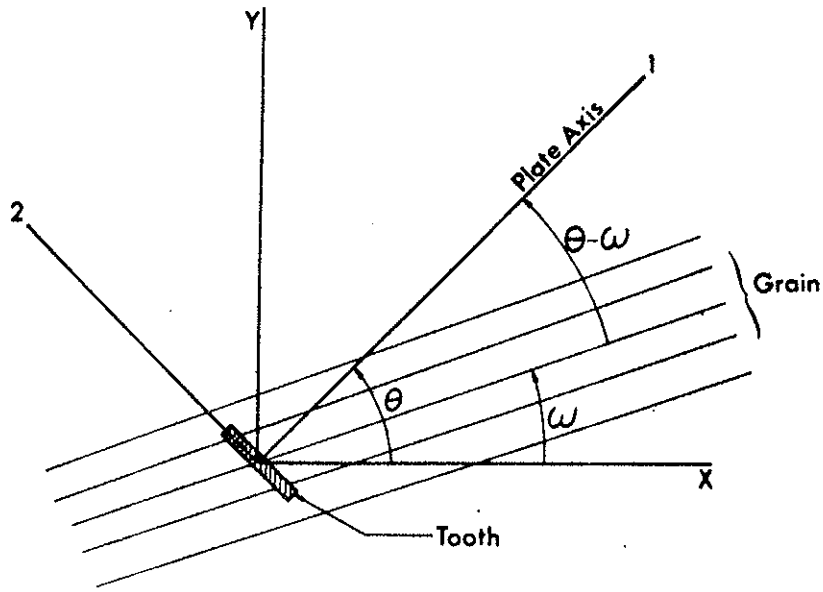

Figure 5. Geometry for general load-slip relationship.

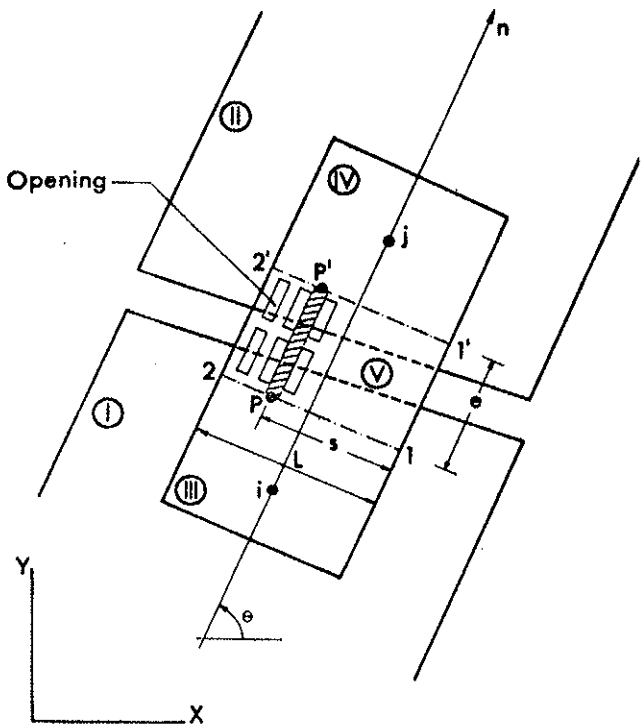

Figure 6. Plate buckling and yielding.

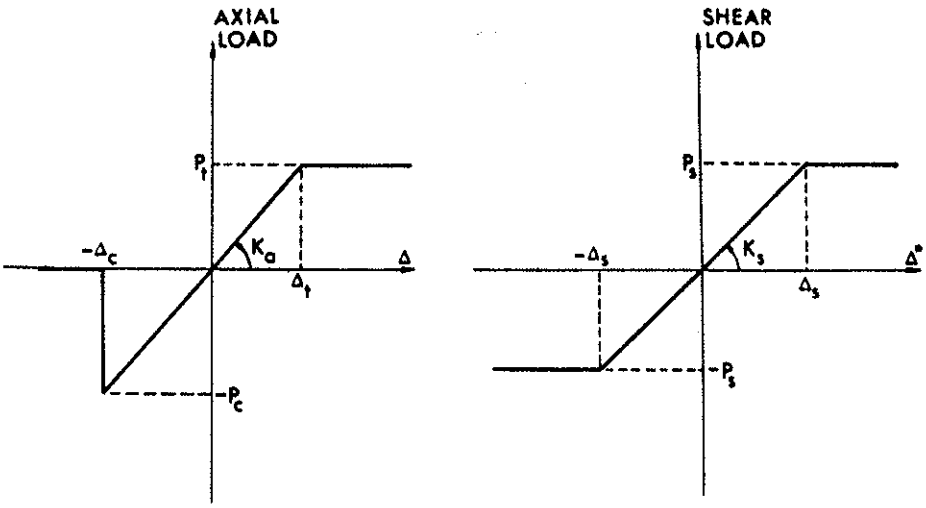

Figure 7. Load deformation relationships for the plate.

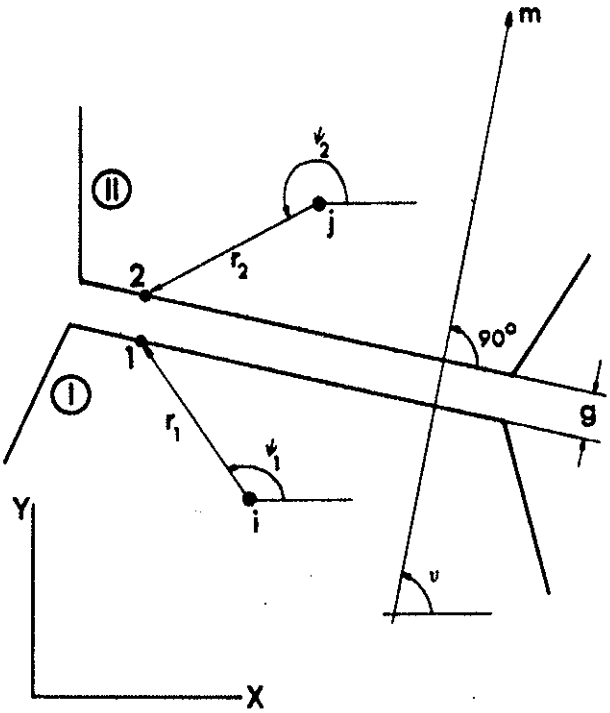

Figure 8. Gap closure.

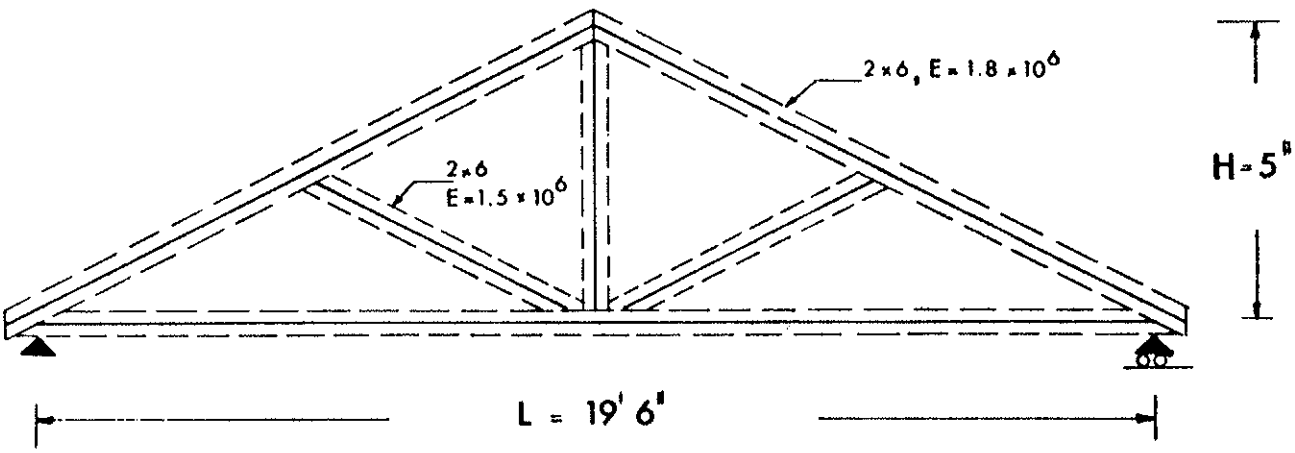

Figure 9. Truss for numerical example.

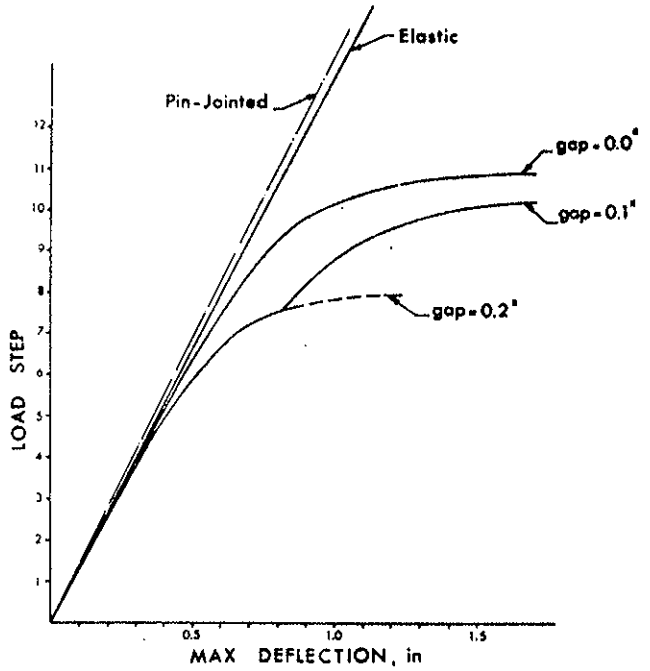

Figure 10. Numerical example: load-deflection curves.

TRUSS DEFORMATION, U.D.L (TOP CHORD)

LOAD STEP = 10 LB/IN

STEP = 2

Figure 11. Truss deflected shape: load Step 2, g = 0.0.

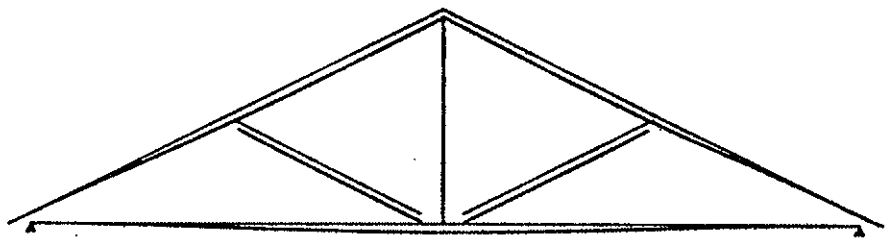

TRUSS DEFORMATION, U.D.L (TOP CHORD)

LOAD STEP = 10 LB/IN

STEP = 10

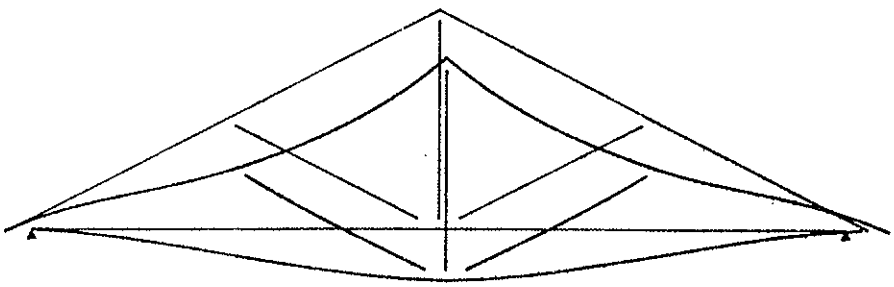

Figure 12. Truss deflected shape: load Step 10, g = 0.0.

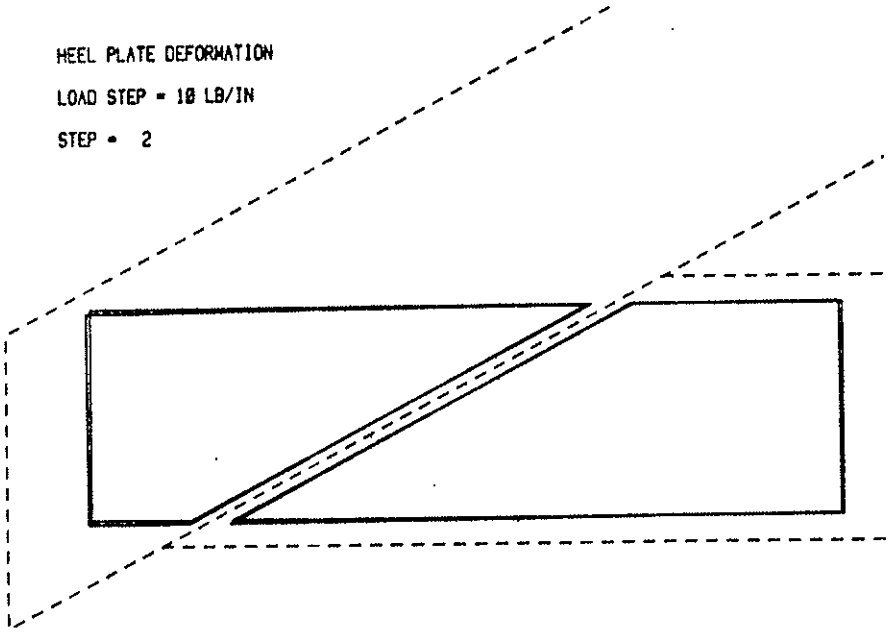

Figure 13. Heel plate deformation: load Step 2, g = 0.0.

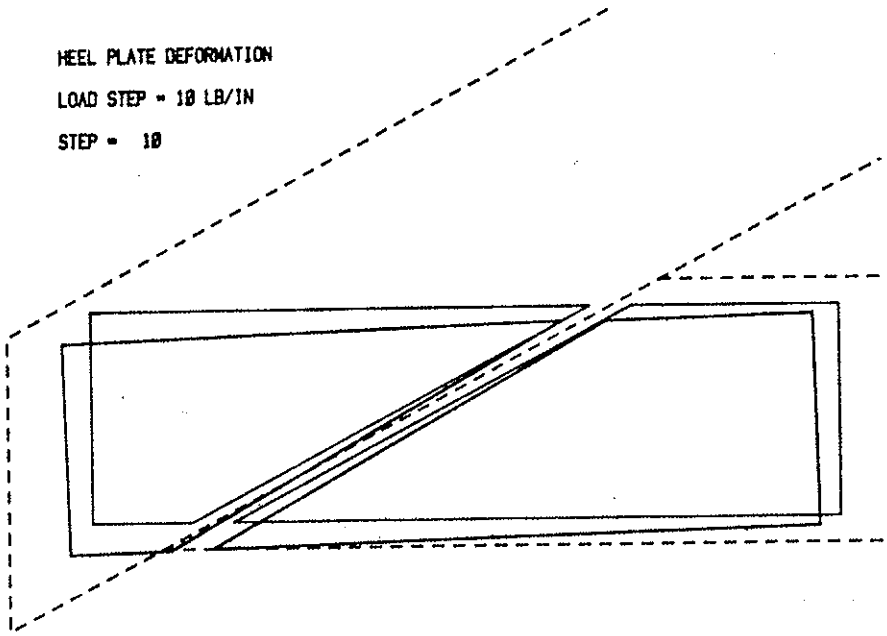

Figure 14. Heel plate deformation: load Step 10, g = 0.0.

CIB-W18/14-14-3

INTERNATIONAL COUNCIL FOR BUILDING RESEARCH STUDIES AND DOCUMENTATION

WORKING COMMISSION W18 - TIMBER STRUCTURES

CANTILEVERED TIMBER TRUSSES

by

A R Egerup

Technical University of Denmark
DENMARK

WARSAW, POLAND
MAY 1981

Cantilevered timber trusses.

A.R. Egerup, Department of Structural Engineering, Technical University of Denmark, 2800 Lyngby, Denmark.

Cantilevered timber trusses have become widely used in recent years due to the possibility which they give for better insulation of the roof cavity.

Design of these trusses by traditional methods, where the structure is regarded as a statically determined truss system with pinned joints in all connections, is not possible in a way similar to that used for ordinary roof trusses because of the cantilevered support.

Other and more advanced design methods, e.g. frame calculations, produce trusses which are over-dimensioned compared with those tested in full-scale laboratory tests.

The fact that the calculated load-carrying capacities are not in agreement with those found by testing is due to several factors. First and foremost of these is the ability of the timber to redistribute the stresses in statically indeterminate structures. This, related to the large strength variations of timber elements causes design methods based on the linear theory of elasticity to give too conservative solutions.

Very pronounced peak moments in the joints are produced by the calculations for mathematical models where the truss structure is regarded as a frame structure, i.e. composed of beam elements. For cantilevered trusses the peak moment (max. moment) occurs at the section above the reactions. Designing for these high moments produces an over-dimensioned structure. The real stress distribution is far more complicated than a model with beam elements can reproduce as the stresses are ideally transferred (minimum potential energy), and the structure finds a state of equilibrium which redistributes the stress and therefore the moments through the structure, so that a cross-section with high strength "carries" relatively more than a low-strength cross-section.

Examples of various mathematical models and their moment distribution are shown in Fig. 1.

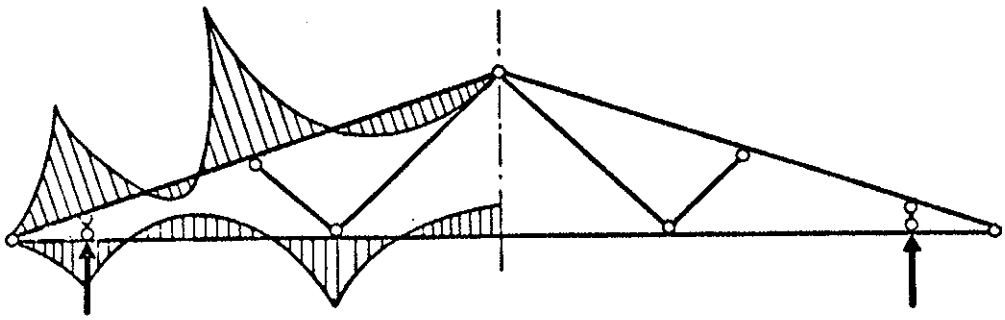

Fig. 1. Linear model with continuous chord at the support.

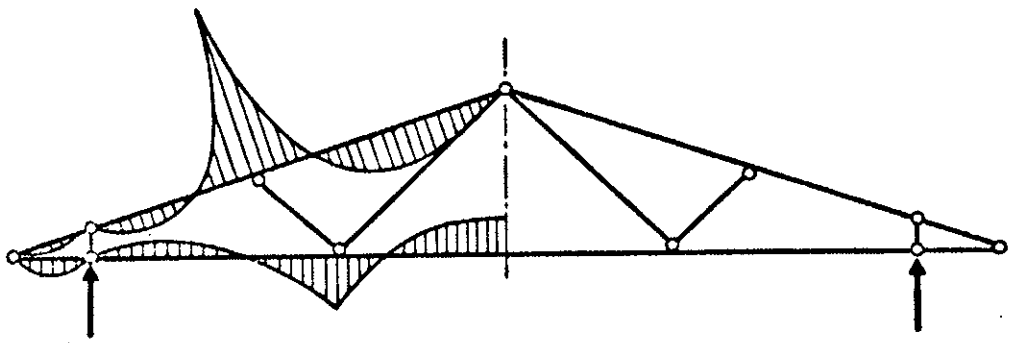

Fig. 2. Linear model with pin joints in chords at the support.

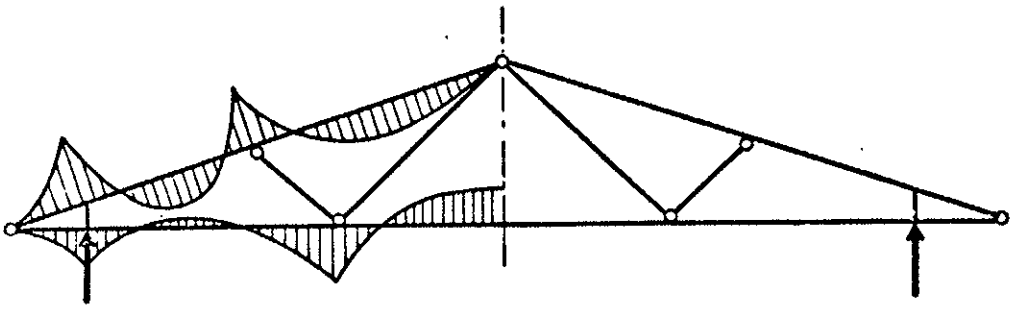

Fig. 3. Elastic-plastic model.

All three mathematical models give a statically permissible stress field (the equilibrium equations are satisfied), but give widely differing maximum moments. In reality the structure will adjust itself in a state of equilibrium where the moments will be between the full elastic value and zero.

The critical moment at the support will depend on the moment capacity of the cross-section at the support, as these will be fully stressed in the ultimate state. The elastic solution will be an upper-bound solution, while the actual moment distribution will depend on the strength of the timber in the cross-sections where moment is maximum, as total collapse first occurs when several parts of the structure are in the ultimate state (plastic mechanism).

A design method which takes account of these effects (stress redistribution and strength variation) will become very complicated. A simple method for the design of cantilevered trusses has therefore been developed.

Design method for cantilevered trusses.

In principle, the design of this type of truss can be performed like the design of ordinary W and WW trusses without cantilevers, as the structure can be regarded as statically determined.

However, the moment at the support must be considered separately, and its load-carrying capacity will be dependent upon the construction of the support-joint. Axial forces and moments in the rest of the structure are calculated in a similar manner to that used for ordinary trusses as a redistribution of the axial forces takes place because the reaction is applied on the lower chord with a certain eccentricity compared with a normal truss.

Two types of support are used for W and WW cantilevered trusses; see Fig. 7. These trusses are also made with and without wedge; see Figs. 4 and 5.

Type A

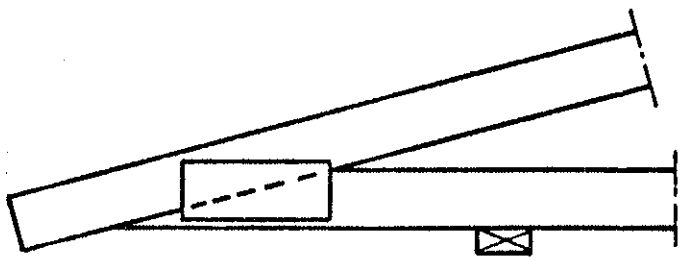

Fig. 4. Without wedge. For small cantilevers.

Type B

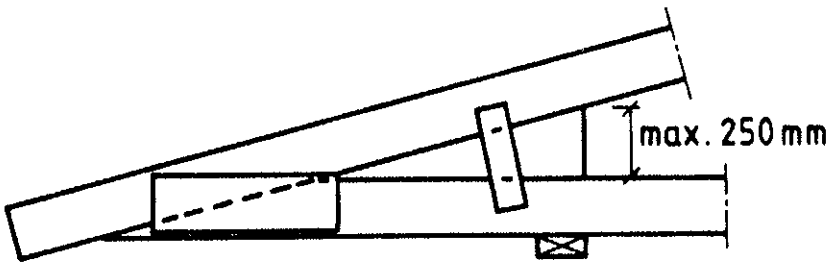

Fig. 5. With wedge height max. app. 250 mm. For large cantilevers.

Static effect

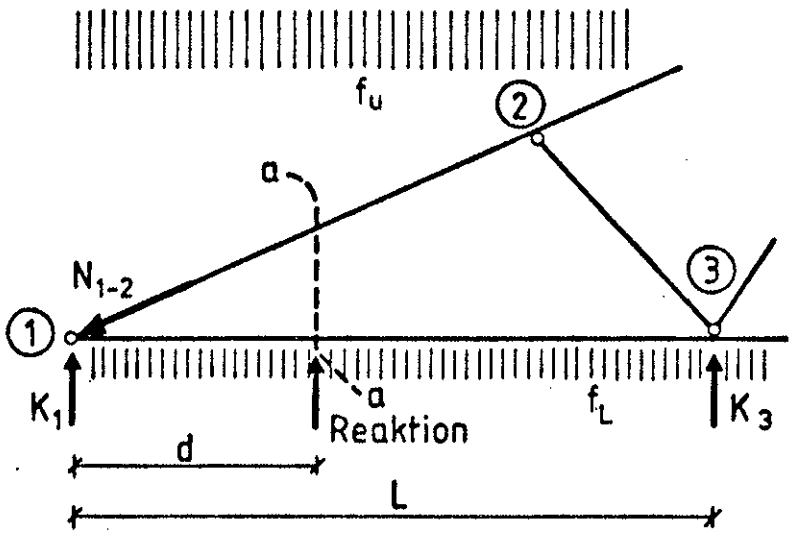

Fig. 6. Mathematical model.

In calculating the axial forces the truss is regarded as though it were centrally supported. Owing to the cantilevers the reaction is distributed as two joint forces applied at the heel joint and the first joint on the lower chord.

Calculation of the axial forces is then made as is usual for a statically determined design, external upward forces of the following order being applied to joints 1 and 3:

$$K_1 = \frac{(L - d)}{L} \cdot R \qquad (1)$$

$$K_3 = \frac{d}{L} \cdot R \qquad (2)$$

where R is the reaction from the external load, d is the cantilever and L is the distance to the first joint from the heel joint.

The moment in the section a-a at the support-joint is determined by the axial force in the lowest part of the upper chord and the external load on the cantilevered part of the truss. The size of the moment can be approximately calculated as

$$M_a = N_{1-2} \cdot \sin\alpha \cdot d + (f_u + f_L) \frac{d^2}{2} \qquad (3)$$

where N_{1-2} is the axial force determined by the above calculation with the reaction distributed at points 1 and 2 in the form of two joint-forces.

f_1 and f_u are the vertical external load on upper and lower chords.

The figures below show how d is defined.

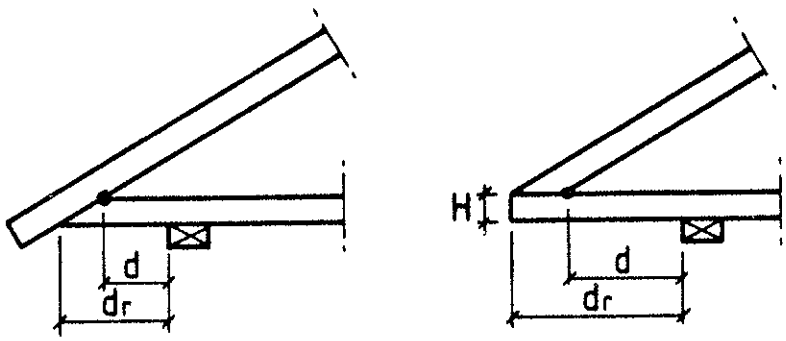

Fig. 7. Examples of the construction of the truss support.

d is defined as the distance from the point of compression contact from the upper chord to the reaction point (point of rotation between upper and lower chords at heel joint). Depending on the construction of the support-joint, the moment capacity of the combined section at the reaction point will be as follows:

Type A

Only the lower chord will contribute to the moment-capacity, and the maximum bending stress is determined as

$$\sigma_B = \frac{M_a}{W_L} \tag{4}$$

where W_L is the section modulus of the lower chord.

Type B

With a wedge the connection is assumed to be so stiff that the moment is distributed between the upper and lower chords in proportion to their section moduli $W = bh^2/6$

$$\sigma_B = \frac{M_a}{W_U + W_L} \tag{5}$$

where W_L and W_U are respectively the lower and upper section moduli.

Stiffness

The deflection criterion as well as the strength criterion can be decisive for large cantilevers.

The maximum deflection is determined from the formula

$$U_{max} = \frac{M_a \cdot d \cdot L}{3E(I_U + I_L)} \tag{6}$$

where L is the distance from the heel joint point to the first joint at the lower chord and I_U and I_L are moments of inertia in the upper and lower chords respectively. $I_U = 0$ for Type A. As a good approximation this can be determined from the formula

$$U_{max} = \frac{R \cdot d^2 \ (L - d)}{3E(I_U + I_L)} \tag{7}$$

The accepted size of the maximum deflection will depend on aesthetic requirements and the relationship to other parts of the building.

Verification

Calculations for trusses tested in full-scale tests have been made to verify the simplified design method. List I gives a comparison of nominal load-carrying capacities determined by tests and calculations.

The ratios between the load-carrying capacities determined by tests and those determined by calculati n are all greater than 1.0, thus showing that the results obtained by the simple design method are all cases. Two test-series performed at STFI Sweden cannot be published but show a similar good agreement with the theory.

The advantage of the method is that it is very simple with regard to manual calculations and computer programming, as it gives an implicit solution, thus avoiding time-consuming iterative calculations.

Test series	Truss no.	Roof slope	Upper chord [mm]	Lower chord [kN]	Ultimate load [kN]	5% fractile [kN]	Nominel load test [kN]	Nominel load design [kN]	Exp./ calc.
WB	30	18°	45x120	45x120	45.28				
Overhang=60	31	-	-	-	49.90				
Span=960	32	-	-	-	36.96				
Wedge	33	-	-	-	42.76				
T200									
Average					43.50	33.50	15.46	15.42	1.00
IND.2									
Overhang=60	1	20°	36x120	36x96	41.60				
Span=800	2	-	-	-	29.76				
Wedge	3	-	-	-	39.68				
C1-quality									
Average					37.04	28.15	12.99	13.04	1.00
CHA 1									
Overhang=36	1	14°	35x95	35x110	34.88				
Span=800	2	-	-	-	58.00				
Wedge	3	-	-	-	37.44				
C1-quality									
Average					43.44	33.01	15.24	8.89	1.70
IND.3									
Overhang=60	1	20°	36x120	36x96	23.76				
Span=800	2	-	-	-	27.68				
U-Wedge	3	-	-	-	17.84				
C1-quality									
Average					23.12	17.57	8.11	6.63	1.22
IND.4									
Overhang=85	1	20°	36x120	36x96	29.76				
Span=800	2	-	-	-	37.04				
Wedge	3	-	-	-	47.60				
C1-quality									
Average					38.08	28.94	13.36	10.91	1.22
CHA 2									
Overhang=85	1	14°	35x95	35x110	29.68				
Span=800	2	-	-	-	38.80				
Wedge	3	-	-	-	37.12				
C1-quality									
Average					31.92	24.26	11.20	11.30	0.99

C1-grade is the next-best French timber grade.

* load-carrying capacity determined with a timber dimension higher in the upper chord (110 mm)

List I
The tests which are used appear in the following reports:

WB: Theoretical and Experimental Determination of the Stiffness and Ultimate Load of Timber Trusses, A.R. Egerup, ABK.

IND 2, CHA 1 Etude 177 Charpente Industrialisée

IND 3, CHA 2 Etude comparative des previsions de calculs et des resultats d'essais.

IND 4 Centre Technique Du Bois

CIB-W18/14-103-1

INTERNATIONAL COUNCIL FOR BUILDING RESEARCH STUDIES AND DOCUMENTATION

WORKING COMMISSION W18 - TIMBER STRUCTURES

COMMENTS ON ISO/TC 165 N52 'Timber Structures; Solid Timber in Structural Sizes; Determination of some Physical and Mechanical Properties'

WARSAW, POLAND
MAY 1981

Section 13.2 "Test procedure"

In the first line of the last paragraph, the word "movement" is to be added after "constant loading-head".

1980-03-09
fra/dow/ti

DIN Deutsches Institut für Normung e.V.

NABau · Normenausschuß Bauwesen Building Division

DIN

German Comments on the document ISO/TC 165 N 52

"Timber structures; solid timber in structural sizes; determination of some physical and mechanical properties", Draft Proposal Dec. 1980

General: it is suggested that, in the case of solid timber, methods for determining

- the modulus of torsion
- the shearing strength and
- the torsional strength

should also be incorporated. Furthermore, the subject-matter should be extended to include glued laminated timber in an additional ISO-Standard.

Section 4 "Dimensions of test specimens"

The length of the test specimens should also be stated in millimetres and not in metres (cf. Section 3 "Symbols").

Section 7 "Conditioning of test specimens"

In standard cases relative humidity of 65 ± 5 % and a temperature of 20 ± 2° C should be preferred. This corresponds to what is stipulated in ISO 554 and in CIB/W 18 - Structural Timber Design Code, 5th edition, August 1980.

Section 8.1 "Test specimen"

"150 mm" should be replaced by "h". This alteration should also be carried out in Section 11.1.

Geschäftsstelle Burggrafenstraße 4-10 D-1000 Berlin 30 Telefon 0 30/26 01 501

Section 8.2 "Test procedure"

- In Fig 1 a the upper dimensioning line should be extended to the ends of the specimen, and the distance between the support and the end of the specimen is to be given as "$h/_2$".

- The two figures are not to be designed "Fig. 1 a", but simply "Fig. 1".

- The first sentence on page 6 ("The specimen shall be supported ... free support condition") is to be modified as follows:

  "The specimen shall be provided with sufficient free support, e. g. such as can be achieved by means of rollers and fixed knife edge reaction."

  This proposed alteration pertains also to:

  - Section 9.2.2, 2nd Paragraph, 1st sentence
  - Section 10.2, 2nd Paragraph, 1st sentence
  - Section 11.2, 2nd Paragraph, 1st sentence

- We propose deleting the subordinate clause of the first sentence in the next paragraph, "if the depth to width ratio of the specimen exceeds four". This proposed deletion pertains also to:

  - Section 9.2.2, 3rd Paragraph, 1st sentence
  - Section 10.2, 3rd Paragraph, 1st sentence
  - Section 11.2, 3rd Paragraph, 1st sentence

- In order to facilitate calculations, it is recommended that the present formula be replaced by:

  $3 \cdot 10^{-3} \cdot h$ mm/s

  where h is the depth of the section in mm.

Section 9.2.3 "Test procedure"

In order to facilitate calculations, it is recommended that

the present formula be replaced by:

$2 \cdot 10^{-4} \cdot h$ mm/s

where h is the depth of the section in mm.

Section 10.3 "Results"

- In the second line, the word "plan" should be replaced by "span".

- In the formula, the numerator "$\ell^2 \Delta F$" is to be replaced by "$\ell^3 \Delta F$".

- In Fig. 2, the point of intersection of the line with the ordinate should be given as $10^5 \cdot K_2$.

Section 11.2 "Test procedure"

In order to prevent failure under transverse loading, the word "one-half" in the third line of the second paragraph is to be deleted.

Section 11.3 "Results"

- "F_{ult}" is to be replaced by "F_u" (see also Sections 13.3 and 15.3).

- It is recommended that the following indication be added at the end of 11.3:

  "Growth characteristics at the fracture section influencing the mode of fracture shall be noted."

  This sentence should also be added at the end of Sections 13.3 and 15.3.

Section 12.2 "Test procedure"

The formula at the top of page 15 should read:

$5 \cdot 10^{-5} \cdot l$ mm/s

Comments to ISO Draft Proposal ISO/TC165 N52

Timber Structures - Solid timber in structural sizes - Determination of some physical and mechanical properties

from Nederlands Normalisatie Instituut NNI

prepared by Commission NNI-NEN 3852 Timber Structures.

10/2-81

0. Introduction.

note 2): Commission 3TT "Testing methods for Timber" of The international Union of Testing and Research Laboratories for Materials and Structures.

1. Scope.

No method for measuring shear strength has been given; is such a method under preparation? Should anything be said in the introduction?

7. Conditioning.

The original RILEM-Recommendation says rel. hum. 60±2%; temp. 23±3°C; the W.18-design code (5th edition August 1980) says: 20±2°C and rel. hum. 0.65±0.05.

8.2. Test procedure.

- Add a third distance "a" between the two loads in fig. 1 a, to make it absolutely clear what is meant by "third-point bending".
- We do not understand what is meant by "the specimen shall be supported on rollers and a knife edge reaction". Could it be one roller and one knife edge? two rollers and a knife edge is too much.

9.2.2. Same remark as 8.2. about supports.

9.2.3. Some mistakes are made here. (o.k. after letter 2nd february 1981)

10.2. second alinea: same remark as 8.2. about supports.

11.2. second alinea: same remark as 8.2. about supports.

12.2. Movement of the loading head: $L \cdot 5.10^{-5}$ mm/sec.

14.2. - What is meant by: "two extensometers ..... shall be attached at diagonally opposite points on each face .....".
So we use 4 x 2 = 8 meters?
And how are they placed "diagonally". Please give a sketch!
- Outside the gauge length there is only ½ times the width at both sides. Is this enough?

Delft, February 1981.

J. Kuipers

T.A.C.M. van der Put.

CAS 中国标准化协会

China Association for Standardization P.O. Box 820, Beijing, China, TG0621 Beijing

DS

Secretariat of ISO/TC 165

6/5-81

1981-04-27

Dear Mrs. A.Sørensen,

Having read "Timber Structure's Solid Timber in Structural Size Determination of Some Physical and Mechanical Properties" (ISO/TC 165 N52, 1980-12-01), we regard this test method as better all in all and suggest the method to be feasible. Now in relation to problem of the rate of load increment we present some opinions as follows:

1) In this test method according to the different sizes of test specimen and the different way of the applied load, therefore the different load increment can be given. And the rate of load increment is fit for the strength and deformation of the test specimen. Actually the unitized rate of the load increment can be attained for different element and research purpose. In this point it is coincidence with our practice in principle.

2) In consideration of some countries they do not adopt the rate of movement of the Loading-head to dominate but to adopt the load increment velocity to dominate the rate of applied load. Therefore, we suggest that the corresponding formulas should be given. For example, measure of the modulus of elasticity is as follow:

(1) When the two load points symmetrize to increase load (as show 1a), for bending test specimen

$$F = \frac{bh^2B}{3a} \times 5 \times 10^{-5}$$

where F is the rate of load increment, i.e.,

incremental load per second, in N/S

b,h, are the width and depth, respectively, in mm

a is the distance between an inner load point and the nearest support, in mm

E is the modulus of elasticity in bending, in N/mm^2 (it is predeterminate)

This formula is the same significance as formula of DP - 8.2.

(2) When the load point lies in the middle of span for bending test specimen

$$F = \frac{10\ b\ h^2 E}{3\ l} \times 10^{-5}$$

where l is the span, in mm

other symbols are the same significance as above.

This formula is the same significance as formula of DP - 9.2.2 and 10.2.

(3) Tension or compression parallel to grain test

$$F = \frac{5AE}{10^5}$$

where A is the cross - sectional area of test specimen.

For tension specimen it is clear area, in mm^2

This formula is the same significance as formula of DP - 12.2 and 14.2.

3) In modulus of elasticity of test it adopted frontier - fiber deformation rate 5 x 10^{-5} mm/mm and while failure test whole process the time was specified 300 ± 120 sec, so the rate seemed to be

CAS 中国标准化协会
China Association for Standardization P.O. Box 820, Beijing, China. TG0621 Beij

quicker. We suggest transforming it into per 3 x 10^{-5} mm/mm and 450 ± 150 sec. respectively.

And what is more, in test method whether or not the specification of number of test specimen can be suplemented.

With regards.

Yours Sincerely,

董岳先

Dong Yuexian
Director of International
Liaison Department of CAS

CIB-W18/14-103-2

INTERNATIONAL COUNCIL FOR BUILDING RESEARCH STUDIES AND DOCUMENTATION

WORKING COMMISSION W18 - TIMBER STRUCTURES

COMMENTS ON THE CIB STRUCTURAL TIMBER DESIGN CODE

by

R H Leicester

Commonwealth Scientific and Industrial Research Organization
AUSTRALIA

WARSAW, POLAND
MAY 1981

COMMUNICATION TO: Professor J H Larsen

FROM: Dr R H Leicester

DATE: April 1981

CIB STRUCTURAL TIMBER DESIGN CODE
(Fifth Edition, August 1980)

Clause 4.1.0

A recommendation is made that "test specimens should contain a grade-determining defect - preferably knots - in the zone of maximum force or bending moment".

First it should be noted that for many species of hardwoods, knots are not the critical defect. Typical examples are *Eucalyptus gummifera*, *Eucalyptus calophylla* and *Tristania conferta* which are commonly utilised in Australia. For these species, gum (kino) veins and pockets and interlocked grain are the most common critical defects. In addition, because eucalyptus and many other hardwood species are self pruning, and because in Australia the uppermost parts of the tree are usually not utilised for structural purposes, most of the hardwood lumber sold in Australia does not have knots as the critical defect.

My primary objection to clause 4.1.0 is that it produces a biased sample. Presumably the characteristic values in Table 4.1.1 are intended to refer to the characteristic values of timber as found in-service. Certainly the partial coefficients in Section 3.2 should be applied to the five-percentile of the in-service population. Thus the testing should simulate in-service conditions, i.e. the sample should be representative of the graded population, and the defects should occur at random locations as they would in service.

It is difficult to make the appropriate correction factor to account for testing a biased sample. We have measured this correction factor and found that it can differ considerably from one species to another. For example, it is quite different for *pinus radiata*, *eucalyptus obliqua* and *callitris glauca*.

Table 4.1.1

Rolling shear is taken to be proportional to the shear strength f_v that is used for beams. This is inappropriate as the shear strength of beams is grade dependant, i.e. it is influenced by grade defects such as splits, checks, kino veins and pockets, whereas rolling shear is related to clear wood strength.

The Code should have a specific set of design properties for plywood.

Table 4.3.1

The $E_{o,mean}/f_m$ ratio is shown to increase for glulam relative to that of solid timber. Surely this ratio should decrease. The assembly of solid wood into glulam does not increase its stiffness. However, for various reasons this assembly can increase the design strength (e.g. due to load sharing effects, local reinforcement by adjacent laminations, etc.)

Clause 5.1.1

For tension strength parallel to the grain there should be a length effect. For in-service conditions, defects occur at random locations and hence longer sticks tend to have weaker defects in them.

Clause 5.1.3

Should there not be a size effect for design bending strength?

Clause 5.1.4

There are two objections of a fundamental nature to equation (5.1.4b) for the strength of notched beams. The first is that the strength is taken proportional to f_v, the same shear strength as is used for beams. The shear strength of beams is grade dependant, i.e. it is affected by the presence of grade defects such as splits, kino veins, etc., whereas notch strength is primarily related to clear wood properties.

The second objection is that the equation shows no effect of the size on fracture strength, an effect that is necessary according to the basic principles of fracture mechanics. Attached to this communication are two figures showing some experimental data which verifies the predicted fracture effect. (The original paper from which these figures have been extracted has been forwarded to Professor Larsen). The size effect may be quickly and easily checked through experiment by Code committee members.

Clause 5.2.0

As for equation (5.1.4b), equation (5.2.0) is not in accordance with fundamental principles of fracture mechanics.

Clause 6.1.1.1 (page 3)

Information is given for design with fibre board and particle board. Is there any standard that specifies appropriate characteristics for these boards, such as for example, minimum acceptable density? Even if there are, it may be useful to specify the required limitations in the Code as these standards may change at some future date.

Clause 7.1.1

We have experimental information that the ultimate strength of plywood-web beams is considerably in excess of the linear elastic buckling strength. I will forward this information to W18 as soon as it is written up.

Table 9.1

This Table should be extended. The specification of a lower charring rate for "other softwoods" as compared with Western Red Cedar is unreliable. For example, an Australian softwood *athroxtaxis selaginoides* has a specific gravity of about 0.4 at 12% m.c., i.e. it is almost as low in density as Western Red Cedar.

I would recommend that charring rate be related to timber density.

Clause 9.1.4

Although char rates are not affected by glue type, we have some information which suggests that the strength of urea-formaldehyde finger joints is considerably affected by heat. We plan a more careful series of fire tests shortly and will forward the results to W18 if this turns out to be correct.

Clause 9.2.2.2

Failure of metal connectors occurs before charring at the connector face commences. Failure takes place when the metal reaches about 120°C and softens wood, which then loses its bearing resistance.

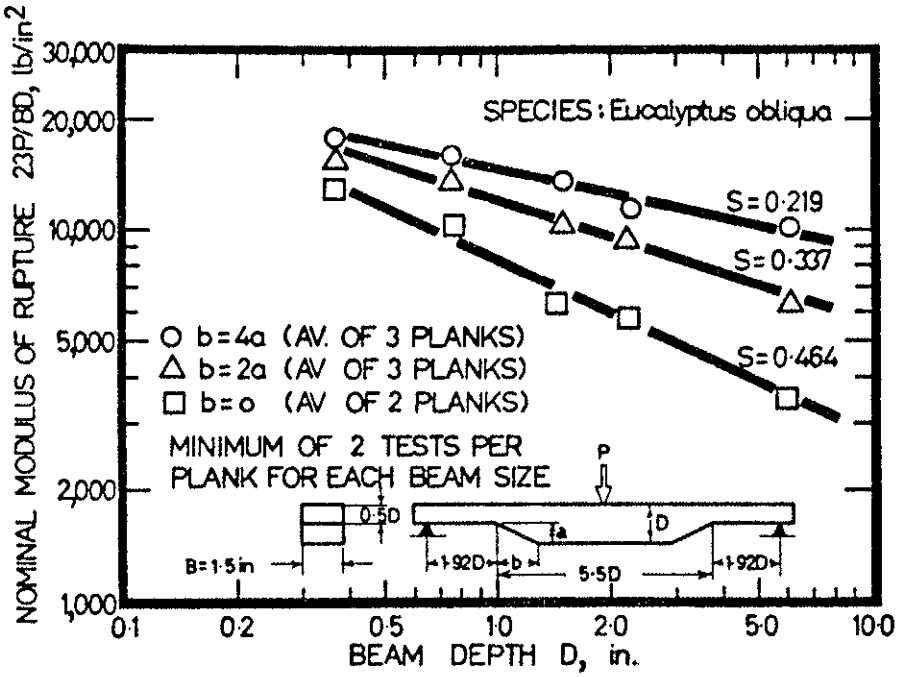

Fig. 9.–Effect of size on bending strength of notched timber beams.

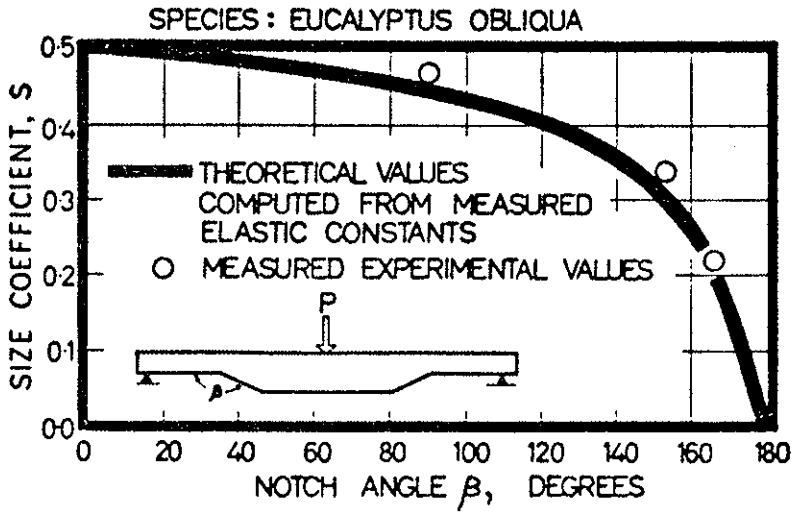

Fig. 10.–Theoretical and measured size coefficients for notched timber beams.

REFERENCE SOURCE OVERLEAF

Effect of Size on the Strength of Structures

By R. H. Leicester

Forest Products Laboratory,
Division of Building Research Technological Paper No. 71

Commonwealth Scientific and Industrial
Research Organization, Australia
1973